Welcome to E-XFL.COM

What is "Embedded - Microcontrollers"?

"Embedded - Microcontrollers" refer to small, integrated circuits designed to perform specific tasks within larger systems. These microcontrollers are essentially compact computers on a single chip, containing a processor core, memory, and programmable input/output peripherals. They are called "embedded" because they are embedded within electronic devices to control various functions, rather than serving as standalone computers. Microcontrollers are crucial in modern electronics, providing the intelligence and control needed for a wide range of applications.

Applications of "Embedded - Microcontrollers"

Details	
Product Status	Not For New Designs
Core Processor	RX
Core Size	32-Bit Single-Core
Speed	100MHz
Connectivity	CANbus, I²C, LINbus, SCI, SPI
Peripherals	DMA, LVD, POR, PWM, WDT
Number of I/O	61
Program Memory Size	128KB (128K x 8)
Program Memory Type	FLASH
EEPROM Size	-
RAM Size	8K x 8
Voltage - Supply (Vcc/Vdd)	2.7V ~ 3.6V
Data Converters	A/D 12x10b, 8x12b
Oscillator Type	Internal
Operating Temperature	-40°C ~ 85°C (TA)
Mounting Type	Surface Mount
Package / Case	112-LQFP
Supplier Device Package	112-LQFP (20x20)
Purchase URL	https://www.e-xfl.com/product-detail/renesas-electronics-america/r5f562t7bdfh-v3

Table 1.1 Outline of Specifications (2 / 5)

Classification	Module/Function	Description
Interrupt	Interrupt controller (ICU)	• Peripheral function interrupts: 101 sources • External interrupts: 9 (NMI and IRQ0 to IRQ7 pins) • Non-maskable interrupts: 3 (the NMI pin, oscillation stop detection interrupt, and voltage-monitoring interrupt) • 16 levels specifiable for the order of priority
Data transfer	Data transfer controller (DTC)	• Three transfer modes: Normal transfer, repeat transfer, and block transfer • Activation sources: Software trigger, external interrupts, and interrupt requests from peripheral functions
I/O ports	Programmable I/O ports	I/O port pins for devices in the 112-pin LQFP/100-pin LQFP/ 80-pin LQFP (R5F562TxGDFF)/80-pin LQFP (except R5F562TxGDFF)/64-pin LQFP • I/O: 61/55/44/44/37 • Input only: 21/21/13/13/9 • Open-drain outputs: 2/2/2/2/2 (I^2C bus interface pins) • Large-current outputs: 12/12/12/6/6(0) (MTU3 and GPT pins) The 5-V version of the 64-pin product does not have large-current outputs. • Reading out the states of pins is always possible.
Timers	Multi-function timer pulse unit 3 (MTU3)	• 16 bits x 8 channels • Up to 24 pulse inputs/outputs and three pulse inputs • Select from among six to eight counter-input clock signals for each channel (ICLK/1, ICLK/4, ICLK/16, ICLK/64, ICLK/256, ICLK/1024, MTCLKA, MTCLKB, MTCLKC, MTCLKD) other than channel 5, for which only four signals are available. • 24 output compare or input capture registers • Counter clearing (clearing is synchronizable with compare match or input capture) • Simultaneous writing to multiple timer counters (TCNT) • Input to and output from all registers in synchronization with counter operation • Buffered operation • Cascade-connected operation • 38 kinds of interrupt source • Automatic transfer of register data • Pulse output modes Toggled, PWM, complementary PWM, and reset synchronous PWM • Complementary PWM output mode Outputs non-overlapping waveforms for controlling 3-phase inverters Automatic specification of dead times PWM duty cycle: Selectable as any value from 0% to 100% Delay can be applied to requests for A/D conversion. Non-generation of interrupt requests at peak or trough values of counters can be selected. Double buffering • Reset-synchronous PWM mode Three PWM waveforms and corresponding inverse waveforms are output with the desired duty cycles. • Phase-counting mode • Counter functionality for dead-time compensation • Generation of triggers for A/D converters • Differential timing for initiation of A/D conversion
	Port output enable 3 (POE3)	• Control of the high-impedance state of the MTU3 and GPT's waveform output pins 5 pins for input from signal sources: POE0, POE4, POE8, POE10, POE11 Initiation on detection of short-circuited outputs (detection of simultaneous switching of large-current pins to the active level) Initiation by comparator-detection of analog level input to the 12-bit A/D converter Initiation by oscillation-stoppage detection Initiation by software • Selection of which output pins should be placed in the high-impedance state at the time of each POE input or comparator detection

Table 1.1 Outline of Specifications (4 / 5)

Classification	Module/Function	Description
Communications	CAN module (CAN) (as an optional function)	• 1 channel • 32 mailboxes
	Serial peripheral interface (RSPI)	• 1 unit • RSPI transfer facility Using the MOSI (master out, slave in), MISO (master in, slave out), SSL (slave select), and RSPI clock (RSPCK) signals enables serial transfer through SPI operation (four lines) or clock-synchronous operation (three lines) Capable of handling serial transfer as a master or slave • Data formats Switching between MSB first and LSB first The number of bits in each transfer can be changed to any number of bits from 8 to 16, or to 20, 24, or 32 bits. 128-bit buffers for transmission and reception Up to four frames can be transmitted or received in a single transfer operation (with each frame having up to 32 bits) • Buffered structure • Double buffers for both transmission and reception
	LIN module (LIN)	• 1 channel (LIN master) • Supports revisions 1.3, 2.0, and 2.1 of the LIN protocol
A/D converter	12-bit A/D converter (S12ADA)	• 12 bits (2 units x 4 channels) • 12-bit resolution • Conversion time: 1.0 μs per channel (in operation with A/D conversion clock ADCLK at 50 MHz) for AVCC = 4.0 to 5.5 V 2.0 μs per channel (in operation with A/D conversion clock ADCLK at 25 MHz) for AVCC0 = 3.0 to 3.6 V • Two basic operating modes Single mode and scan mode • Scan mode One-cycle scan mode Continuous scan mode 2-channel scan mode (Input ports of the A/D unit are divided into two groups in this mode, and the activation sources are separately selectable for each group.) • Sample-and-hold function A common sample-and-hold circuit for both units is included. Additionally, sample-and-hold circuit for each unit is included. (three channels per unit) • A/D-conversion register settings for each input pin. • Two registers for the result of conversion are provided for a single analog input pin of each unit (AN000 and AN100). • Three ways to start A/D conversion Conversion can be started by software, a conversion start trigger from a timer (MTU3 or GPT), or an external trigger signal. • Functionality for 8- or 10-bit precision output Right-shifting of the results of conversion for output by two or four bits is selectable. • Self-diagnostic function The self-diagnostic function internally generates three analog input voltages (VREFL0, VREFH0 x 1/2, VREFH0). • Amplification of input signals by a programmable gain amplifier (three channels per unit) Amplification rate: 2.0-, 2.5-, 3.077-, 3.636-, 4.0-, 4.444-, 5.0-, 5.714-, 6.667-, 10.0-, or 13.333-times amplification (a total of 11 steps) • Window comparators (three channels per unit)

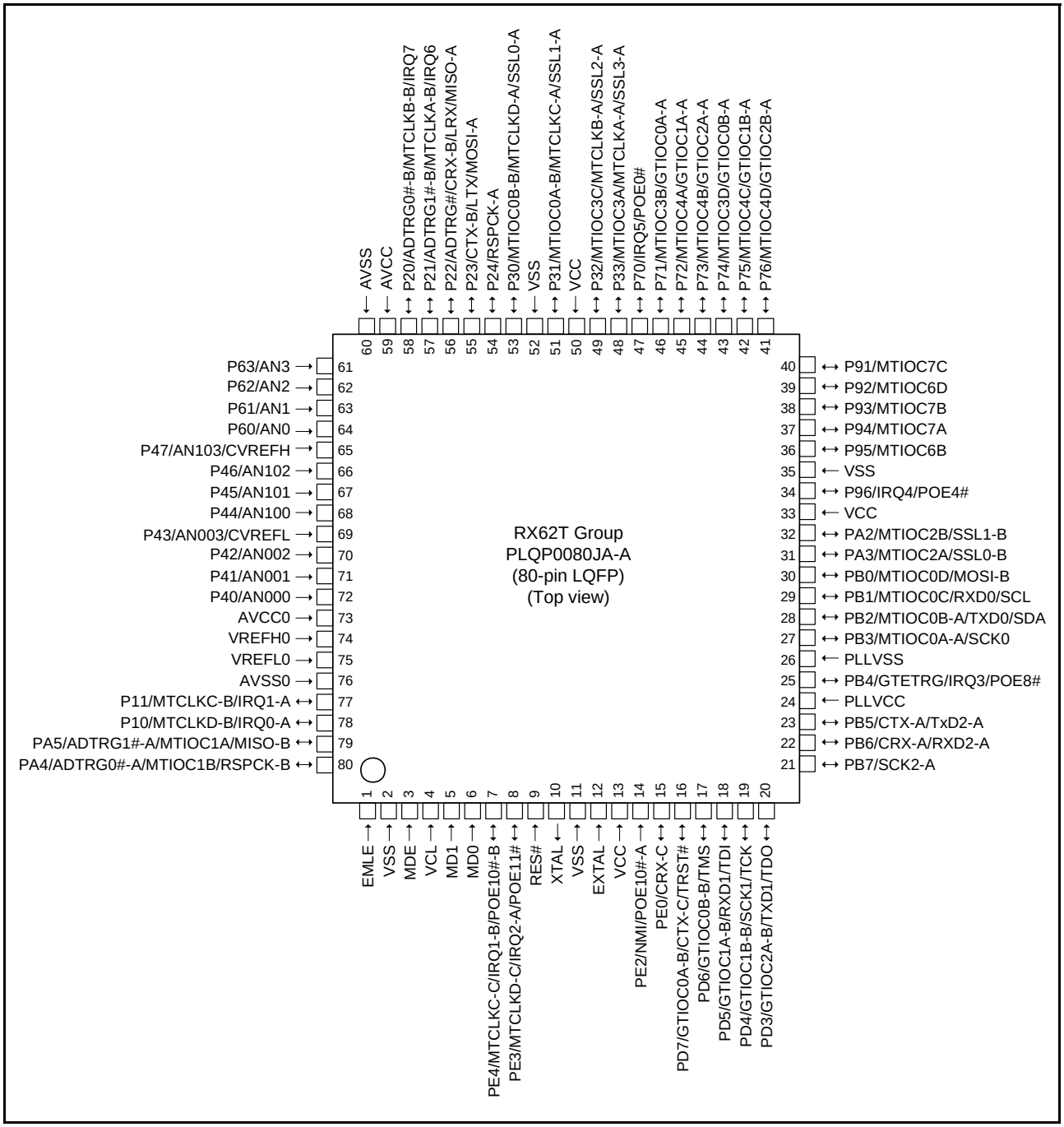

Figure 1.5 Pin Assignment of the 80-Pin LQFP

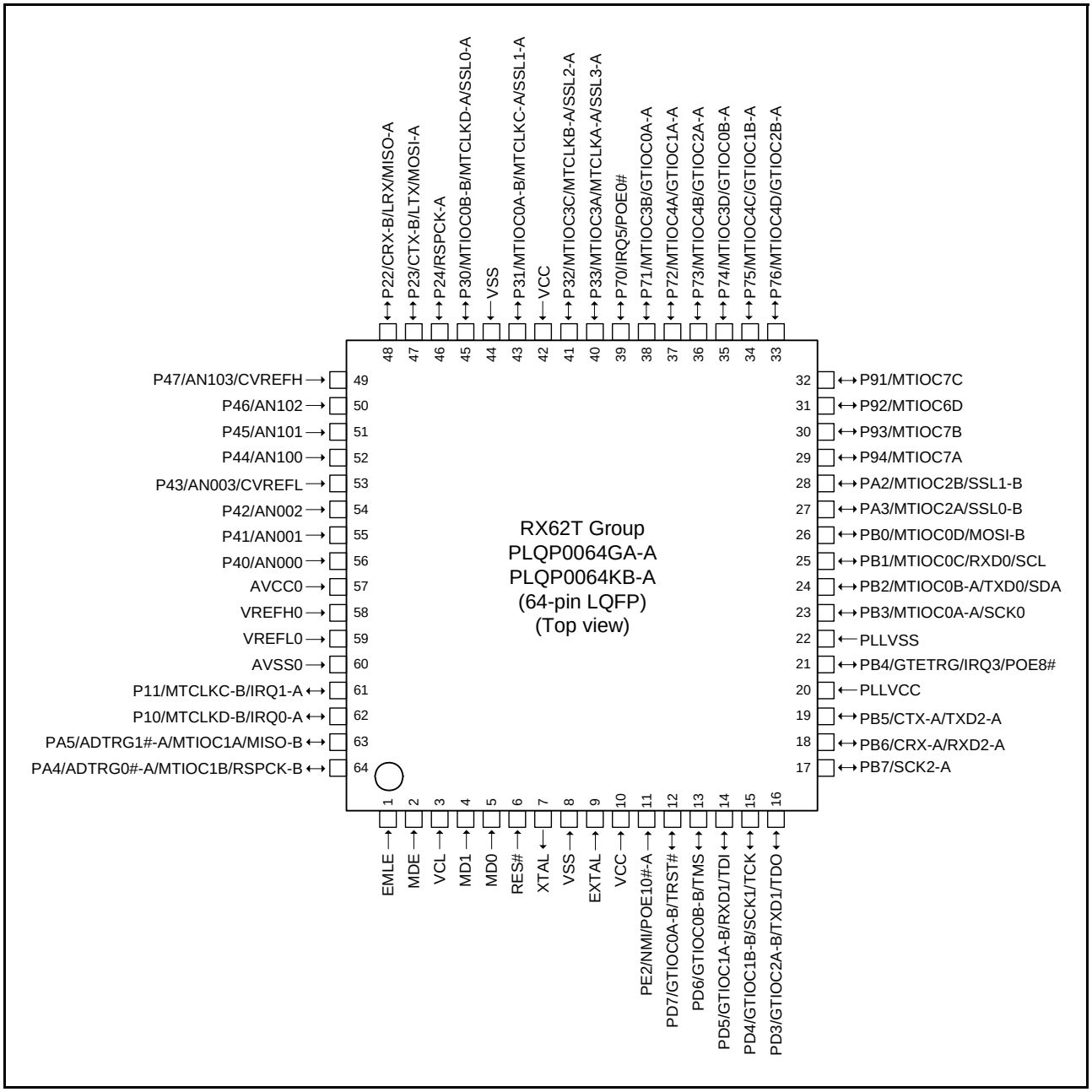

Figure 1.7 Pin Assignment of the 64-Pin LQFP

Table 1.7 List of Pins and Pin Functions (80-Pin LQFP: R5F562TxGDFF) (3 / 3)

Pin No. (80-Pin LQFP)	Power Supply Clock System Control	I/O Port	Analog	Timer	Communication	Interrupt	POE	Debugging
76	AVSS0							
77		P82		MTIC5U	SCK2-B			
78		P81		MTIC5V	TXD2-B			
79		P80		MTIC5W	RXD2-B			
80		P10		MTCLKD-B		IRQ0-A		

2. CPU

The RX CPU has sixteen general-purpose registers, nine control registers, and one accumulator used for DSP instructions.

General-purpose register

b31 … b0
R0 (SP) *
R1
R2
R3
R4
R5
R6
R7
R8
R9
R10
R11
R12
R13
R14
R15

Control register

b31 … b0	
ISP	(Interrupt stack pointer)
USP	(User stack pointer)
INTB	(Interrupt table register)
PC	(Program counter)
PSW	(Processor status word)
BPC	(Backup PC)
BPSW	(Backup PSW)
FINTV	(Fast interrupt vector register)
FPSW	(Floating-point status word)

DSP instruction register

b63 … b0
ACC (Accumulator)

Note: * The stack pointer (SP) can be the interrupt stack pointer (ISP) or user stack pointer (USP), according to the value of the U bit in the PSW register.

Figure 2.1 Register Set of the CPU

Table 4.1 List of I/O Registers (Address Order) (5 / 25)

Address	Module Abbreviation	Register Name	Register Abbreviation	Number of Bits	Access Size	Number of Access Cycles
0008 7172h	ICU	DTC activation enable register 114	DTCER114	8	8	2 ICLK
0008 7173h	ICU	DTC activation enable register 115	DTCER115	8	8	2 ICLK
0008 7174h	ICU	DTC activation enable register 116	DTCER116	8	8	2 ICLK
0008 7175h	ICU	DTC activation enable register 117	DTCER117	8	8	2 ICLK
0008 7179h	ICU	DTC activation enable register 121	DTCER121	8	8	2 ICLK
0008 717Ah	ICU	DTC activation enable register 122	DTCER122	8	8	2 ICLK
0008 717Dh	ICU	DTC activation enable register 125	DTCER125	8	8	2 ICLK
0008 717Eh	ICU	DTC activation enable register 126	DTCER126	8	8	2 ICLK
0008 7181h	ICU	DTC activation enable register 129	DTCER129	8	8	2 ICLK
0008 7182h	ICU	DTC activation enable register 130	DTCER130	8	8	2 ICLK
0008 7183h	ICU	DTC activation enable register 131	DTCER131	8	8	2 ICLK
0008 7184h	ICU	DTC activation enable register 132	DTCER132	8	8	2 ICLK
0008 7186h	ICU	DTC activation enable register 134	DTCER134	8	8	2 ICLK
0008 7187h	ICU	DTC activation enable register 135	DTCER135	8	8	2 ICLK
0008 7188h	ICU	DTC activation enable register 136	DTCER136	8	8	2 ICLK
0008 7189h	ICU	DTC activation enable register 137	DTCER137	8	8	2 ICLK
0008 718Ah	ICU	DTC activation enable register 138	DTCER138	8	8	2 ICLK
0008 718Bh	ICU	DTC activation enable register 139	DTCER139	8	8	2 ICLK
0008 718Ch	ICU	DTC activation enable register 140	DTCER140	8	8	2 ICLK
0008 718Dh	ICU	DTC activation enable register 141	DTCER141	8	8	2 ICLK
0008 718Eh	ICU	DTC activation enable register 142	DTCER142	8	8	2 ICLK
0008 718Fh	ICU	DTC activation enable register 143	DTCER143	8	8	2 ICLK
0008 7190h	ICU	DTC activation enable register 144	DTCER144	8	8	2 ICLK
0008 7191h	ICU	DTC activation enable register 145	DTCER145	8	8	2 ICLK
0008 7195h	ICU	DTC activation enable register 149	DTCER149	8	8	2 ICLK
0008 7196h	ICU	DTC activation enable register 150	DTCER150	8	8	2 ICLK
0008 7197h	ICU	DTC activation enable register 151	DTCER151	8	8	2 ICLK
0008 7198h	ICU	DTC activation enable register 152	DTCER152	8	8	2 ICLK
0008 7199h	ICU	DTC activation enable register 153	DTCER153	8	8	2 ICLK
0008 71AEh	ICU	DTC activation enable register 174	DTCER174	8	8	2 ICLK
0008 71AFh	ICU	DTC activation enable register 175	DTCER175	8	8	2 ICLK
0008 71B0h	ICU	DTC activation enable register 176	DTCER176	8	8	2 ICLK
0008 71B1h	ICU	DTC activation enable register 177	DTCER177	8	8	2 ICLK
0008 71B2h	ICU	DTC activation enable register 178	DTCER178	8	8	2 ICLK
0008 71B3h	ICU	DTC activation enable register 179	DTCER179	8	8	2 ICLK
0008 71B4h	ICU	DTC activation enable register 180	DTCER180	8	8	2 ICLK
0008 71B5h	ICU	DTC activation enable register 181	DTCER181	8	8	2 ICLK
0008 71B6h	ICU	DTC activation enable register 182	DTCER182	8	8	2 ICLK
0008 71B7h	ICU	DTC activation enable register 183	DTCER183	8	8	2 ICLK
0008 71B8h	ICU	DTC activation enable register 184	DTCER184	8	8	2 ICLK
0008 71BAh	ICU	DTC activation enable register 186	DTCER186	8	8	2 ICLK
0008 71BBh	ICU	DTC activation enable register 187	DTCER187	8	8	2 ICLK
0008 71BCh	ICU	DTC activation enable register 188	DTCER188	8	8	2 ICLK
0008 71BDh	ICU	DTC activation enable register 189	DTCER189	8	8	2 ICLK

Table 4.1 List of I/O Registers (Address Order) (11 / 25)

Address	Module Abbreviation	Register Name	Register Abbreviation	Number of Bits	Access Size	Number of Access Cycles
0008 8383h	RSPI	RSPI status register	SPSR	8	8	2, 3 PCLK*3
0008 8384h	RSPI	RSPI data register	SPDR	16, 32	16, 32	2, 3 PCLK*3
0008 8388h	RSPI	RSPI sequence control register	SPSCR	8	8	2, 3 PCLK*3
0008 8389h	RSPI	RSPI sequence status register	SPSSR	8	8	2, 3 PCLK*3
0008 838Ah	RSPI	RSPI bit rate register	SPBR	8	8	2, 3 PCLK*3
0008 838Bh	RSPI	RSPI data control register	SPDCR	8	8	2, 3 PCLK*3
0008 838Ch	RSPI	RSPI clock delay register	SPCKD	8	8	2, 3 PCLK*3
0008 838Dh	RSPI	RSPI slave select negation delay register	SSLND	8	8	2, 3 PCLK*3
0008 838Eh	RSPI	RSPI next-access delay register	SPND	8	8	2, 3 PCLK*3
0008 838Fh	RSPI	RSPI control register 2	SPCR2	8	8	2, 3 PCLK*3
0008 8390h	RSPI	RSPI command register 0	SPCMD0	16	16	2, 3 PCLK*3
0008 8392h	RSPI	RSPI command register 1	SPCMD1	16	16	2, 3 PCLK*3
0008 8394h	RSPI	RSPI command register 2	SPCMD2	16	16	2, 3 PCLK*3
0008 8396h	RSPI	RSPI command register 3	SPCMD3	16	16	2, 3 PCLK*3
0008 8398h	RSPI	RSPI command register 4	SPCMD4	16	16	2, 3 PCLK*3
0008 839Ah	RSPI	RSPI command register 5	SPCMD5	16	16	2, 3 PCLK*3
0008 839Ch	RSPI	RSPI command register 6	SPCMD6	16	16	2, 3 PCLK*3
0008 839Eh	RSPI	RSPI command register 7	SPCMD7	16	16	2, 3 PCLK*3
0008 9000h	S12AD0	A/D control register	ADCSR	8	8	2, 3 PCLK*3
0008 9004h	S12AD0	A/D channel select register	ADANS	16	16	2, 3 PCLK*3
0008 900Ah	S12AD0	A/D programmable gain amplifier register	ADPG	16	16	2, 3 PCLK*3
0008 900Eh	S12AD0	A/D control extended register	ADCER	16	16	2, 3 PCLK*3
0008 9010h	S12AD0	A/D start trigger select register	ADSTRGR	16	16	2, 3 PCLK*3
0008 9012h	S12AD	Comparator operating mode select register 0	ADCMPMD0	16	16	2, 3 PCLK*3
0008 9014h	S12AD	Comparator operating mode select register 1	ADCMPMD1	16	16	2, 3 PCLK*3
0008 9016h	S12AD	Comparator filter mode register 0	ADCMPNR0	16	16	2, 3 PCLK*3
0008 9018h	S12AD	Comparator filter mode register 1	ADCMPNR1	16	16	2, 3 PCLK*3
0008 901Ah	S12AD	Comparator detection flag register	ADCMPFR	8	8	2, 3 PCLK*3
0008 901Ch	S12AD	Comparator interrupt select register	ADCMPSEL	16	16	2, 3 PCLK*3
0008 901Eh	S12AD0	A/D data register Diag	ADRD	16	16	2, 3 PCLK*3
0008 9020h	S12AD0	A/D data register 0A	ADDR0A	16	16	2, 3 PCLK*3
0008 9022h	S12AD0	A/D data register 1	ADDR1	16	16	2, 3 PCLK*3
0008 9024h	S12AD0	A/D data register 2	ADDR2	16	16	2, 3 PCLK*3
0008 9026h	S12AD0	A/D data register 3	ADDR3	16	16	2, 3 PCLK*3
0008 9030h	S12AD0	A/D data register 0B	ADDR0B	16	16	2, 3 PCLK*3
0008 9060h	S12AD0	A/D sampling state register	ADSSTR	8	8	2, 3 PCLK*3
0008 9080h	S12AD1	A/D control register	ADCSR	8	8	2, 3 PCLK*3
0008 9084h	S12AD1	A/D channel select register	ADANS	16	16	2, 3 PCLK*3
0008 908Ah	S12AD1	A/D programmable gain amplifier register	ADPG	16	16	2, 3 PCLK*3
0008 908Eh	S12AD1	A/D control extended register	ADCER	16	16	2, 3 PCLK*3
0008 9090h	S12AD1	A/D start trigger select register	ADSTRGR	16	16	2, 3 PCLK*3
0008 909Eh	S12AD1	A/D data register Diag	ADRD	16	16	2, 3 PCLK*3
0008 90A0h	S12AD1	A/D data register 0A	ADDR0A	16	16	2, 3 PCLK*3
0008 90A2h	S12AD1	A/D data register 1	ADDR1	16	16	2, 3 PCLK*3

Table 4.1 List of I/O Registers (Address Order) (15 / 25)

Address	Module Abbreviation	Register Name	Register Abbreviation	Number of Bits	Access Size	Number of Access Cycles
0009 041Ch	CAN0*2	Mask register 7	MKR7	32	8, 16, 32	2, 3 PCLK*3
0009 0420h	CAN0*2	FIFO received ID compare register 0	FIDCR0	32	8, 16, 32	2, 3 PCLK*3
0009 0424h	CAN0*2	FIFO received ID compare register 1	FIDCR1	32	8, 16, 32	2, 3 PCLK*3
0009 0428h	CAN0*2	Mask invalid register	MKIVLR	32	8, 16, 32	2, 3 PCLK*3
0009 042Ch	CAN0*2	Mailbox interrupt enable register	MIER	32	8, 16, 32	2, 3 PCLK*3
0009 0820h to 0009 083Fh	CAN0*2	Message control registers 0 to 31	MCTL0 to MCTL31	8	8	2, 3 PCLK*3
0009 0840h	CAN0*2	Control register	CTLR	16	8, 16	2, 3 PCLK*3
0009 0842h	CAN0*2	Status register	STR	16	8, 16	2, 3 PCLK*3
0009 0844h	CAN0*2	Bit configuration register	BCR	32	8, 16, 32	2, 3 PCLK*3
0009 0848h	CAN0*2	Receive FIFO control register	RFCR	8	8	2, 3 PCLK*3
0009 0849h	CAN0*2	Receive FIFO pointer control register	RFPCR	8	8	2, 3 PCLK*3
0009 084Ah	CAN0*2	Transmit FIFO control register	TFCR	8	8	2, 3 PCLK*3
0009 084Bh	CAN0*2	Transmit FIFO pointer control register	TFPCR	8	8	2, 3 PCLK*3
0009 084Ch	CAN0*2	Error interrupt enable register	EIER	8	8	2, 3 PCLK*3
0009 084Dh	CAN0*2	Error interrupt factor judge register	EIFR	8	8	2, 3 PCLK*3
0009 084Eh	CAN0*2	Receive error count register	RECR	8	8	2, 3 PCLK*3
0009 084Fh	CAN0*2	Transmit error count register	TECR	8	8	2, 3 PCLK*3
0009 0850h	CAN0*2	Error code store register	ECSR	8	8	2, 3 PCLK*3
0009 0851h	CAN0*2	Channel search support register	CSSR	8	8	2, 3 PCLK*3
0009 0852h	CAN0*2	Mailbox search status register	MSSR	8	8	2, 3 PCLK*3
0009 0853h	CAN0*2	Mailbox search mode register	MSMR	8	8	2, 3 PCLK*3
0009 0854h	CAN0*2	Time stamp register	TSR	16	8, 16	2, 3 PCLK*3
0009 0856h	CAN0*2	Acceptance filter support register	AFSR	16	8, 16	2, 3 PCLK*3
0009 0858h	CAN0*2	Test control register	TCR	8	8	2, 3 PCLK*3
0009 4001h	LIN0	LIN wake-up baud rate select register	LWBR	8	8	2, 3 PCLK*3
0009 4002h	LIN0	LIN baud rate prescaler 0 register	LBRP0	8	8, 16	2, 3 PCLK*3
0009 4003h	LIN0	LIN baud rate prescaler 1 register	LBRP1	8	8, 16	2, 3 PCLK*3
0009 4004h	LIN0	LIN self-test control register	LSTC	8	8	2, 3 PCLK*3
0009 4008h	LIN0	Mode register	L0MD	8	8, 16, 32	2, 3 PCLK*3
0009 4009h	LIN0	Break field setting register	L0BRK	8	8, 16, 32	2, 3 PCLK*3
0009 400Ah	LIN0	Space setting register	L0SPC	8	8, 16, 32	2, 3 PCLK*3
0009 400Bh	LIN0	Wake-up setting register	L0WUP	8	8, 16, 32	2, 3 PCLK*3
0009 400Ch	LIN0	Interrupt enable register	L0IE	8	8, 16	2, 3 PCLK*3
0009 400Dh	LIN0	Error detection enable register	L0EDE	8	8, 16	2, 3 PCLK*3
0009 400Eh	LIN0	Control register	L0C	8	8	2, 3 PCLK*3
0009 4010h	LIN0	Transmission control register	L0TC	8	8, 16, 32	2, 3 PCLK*3
0009 4011h	LIN0	Mode status register	L0MST	8	8, 16, 32	2, 3 PCLK*3
0009 4012h	LIN0	Status register	L0ST	8	8, 16, 32	2, 3 PCLK*3
0009 4013h	LIN0	Error status register	L0EST	8	8, 16, 32	2, 3 PCLK*3
0009 4014h	LIN0	Response field set register	L0RFC	8	8, 16	2, 3 PCLK*3
0009 4015h	LIN0	Buffer register	L0IDB	8	8, 16	2, 3 PCLK*3
0009 4016h	LIN0	Check sum buffer register	L0CBR	8	8	2, 3 PCLK*3
0009 4018h	LIN0	Data 1 buffer register	L0DB1	8	8, 16, 32	2, 3 PCLK*3

Table 4.1 List of I/O Registers (Address Order) (17 / 25)

Address	Module Abbreviation	Register Name	Register Abbreviation	Number of Bits	Access Size	Number of Access Cycles
000C 123Ah	MTU	Timer interrupt skipping mode register A	TITMRA	8	8	5 ICLK
000C 123Bh	MTU	Timer interrupt skipping set register 2A	TITCR2A	8	8	5 ICLK
000C 123Ch	MTU	Timer interrupt skipping counter 2A	TITCNT2A	8	8	5 ICLK
000C 1240h	MTU4	Timer A/D converter start request control register	TADCR	16	16	5 ICLK
000C 1244h	MTU4	Timer A/D converter start request cycle set register A	TADCORA	16	16, 32	5 ICLK
000C 1246h	MTU4	Timer A/D converter start request cycle set register B	TADCORB	16	16	5 ICLK
000C 1248h	MTU4	Timer A/D converter start request cycle set buffer register A	TADCOBRA	16	16, 32	5 ICLK
000C 124Ah	MTU4	Timer A/D converter start request cycle set buffer register B	TADCOBRB	16	16	5 ICLK
000C 1260h	MTU	Timer waveform control register A	TWCRA	8	8	5 ICLK
000C 1270h	MTU3	Timer mode register 2A	TMDR2A	8	8	5 ICLK
000C 1272h	MTU3	Timer general register E	TGRE	16	16	5 ICLK
000C 1274h	MTU4	Timer general register E	TGRE	16	16	5 ICLK
000C 1276h	MTU4	Timer general register F	TGRF	16	16	5 ICLK
000C 1280h	MTU	Timer start register A	TSTRA	8	8, 16	5 ICLK
000C 1281h	MTU	Timer synchronous register A	TSYRA	8	8	5 ICLK
000C 1282h	MTU	Timer counter synchronous start register	TCSYSTR	8	8	5 ICLK
000C 1284h	MTU	Timer read/write enable register A	TRWERA	8	8	5 ICLK
000C 1300h	MTU0	Timer control register	TCR	8	8, 16, 32	5 ICLK
000C 1301h	MTU0	Timer mode register 1	TMDR1	8	8	5 ICLK
000C 1302h	MTU0	Timer I/O control register H	TIORH	8	8, 16	5 ICLK
000C 1303h	MTU0	Timer I/O control register L	TIORL	8	8	5 ICLK
000C 1304h	MTU0	Timer interrupt enable register	TIER	8	8, 16, 32	5 ICLK
000C 1305h	MTU0	Timer status register	TSR	8	8	5 ICLK
000C 1306h	MTU0	Timer counter	TCNT	16	16	5 ICLK
000C 1308h	MTU0	Timer general register A	TGRA	16	16, 32	5 ICLK
000C 130Ah	MTU0	Timer general register B	TGRB	16	16	5 ICLK
000C 130Ch	MTU0	Timer general register C	TGRC	16	16, 32	5 ICLK
000C 130Eh	MTU0	Timer general register D	TGRD	16	16	5 ICLK
000C 1320h	MTU0	Timer general register E	TGRE	16	16, 32	5 ICLK
000C 1322h	MTU0	Timer general register F	TGRF	16	16	5 ICLK
000C 1324h	MTU0	Timer interrupt enable register 2	TIER2	8	8, 16	5 ICLK
000C 1325h	MTU0	Timer status register 2	TSR2	8	8	5 ICLK
000C 1326h	MTU0	Timer buffer operation transfer mode register	TBTM	8	8	5 ICLK
000C 1380h	MTU1	Timer control register	TCR	8	8, 16	5 ICLK
000C 1381h	MTU1	Timer mode register 1	TMDR1	8	8	5 ICLK
000C 1382h	MTU1	Timer I/O control register	TIOR	8	8	5 ICLK
000C 1384h	MTU1	Timer interrupt enable register	TIER	8	8, 16, 32	5 ICLK
000C 1385h	MTU1	Timer status register	TSR	8	8	5 ICLK
000C 1386h	MTU1	Timer counter	TCNT	16	16	5 ICLK
000C 1388h	MTU1	Timer general register A	TGRA	16	16, 32	5 ICLK
000C 138Ah	MTU1	Timer general register B	TGRB	16	16	5 ICLK

Table 4.1 List of I/O Registers (Address Order) (19 / 25)

Address	Module Abbreviation	Register Name	Register Abbreviation	Number of Bits	Access Size	Number of Access Cycles
000C 1A39h	MTU7	Timer buffer operation transfer mode register	TBTM	8	8	5 ICLK
000C 1A3Ah	MTU	Timer interrupt skipping mode register B	TITMRB	8	8	5 ICLK
000C 1A3Bh	MTU	Timer interrupt skipping set register 2B	TITCR2B	8	8	5 ICLK
000C 1A3Ch	MTU	Timer interrupt skipping counter 2B	TITCNT2B	8	8	5 ICLK
000C 1A40h	MTU7	Timer A/D converter start request control register	TADCR	16	16	5 ICLK
000C 1A44h	MTU7	Timer A/D converter start request cycle set register A	TADCORA	16	16, 32	5 ICLK
000C 1A46h	MTU7	Timer A/D converter start request cycle set register B	TADCORB	16	16	5 ICLK
000C 1A48h	MTU7	Timer A/D converter start request cycle set buffer register A	TADCOBRA	16	16, 32	5 ICLK
000C 1A4Ah	MTU7	Timer A/D converter start request cycle set buffer register B	TADCOBRB	16	16	5 ICLK
000C 1A50h	MTU6	Timer synchronous clear register	TSYCR	8	8	5 ICLK
000C 1A60h	MTU	Timer waveform control register B	TWCRB	8	8	5 ICLK
000C 1A70h	MTU	Timer mode register 2B	TMDR2B	8	8	5 ICLK
000C 1A72h	MTU6	Timer general register E	TGRE	16	16	5 ICLK
000C 1A74h	MTU7	Timer general register E	TGRE	16	16	5 ICLK
000C 1A76h	MTU7	Timer general register F	TGRF	16	16	5 ICLK
000C 1A80h	MTU	Timer start register B	TSTRB	8	8, 16	5 ICLK
000C 1A81h	MTU	Timer synchronous register B	TSYRB	8	8	5 ICLK
000C 1A84h	MTU	Timer read/write enable register B	TRWERB	8	8	5 ICLK
000C 1C80h	MTU5	Timer counter U	TCNTU	16	16, 32	5 ICLK
000C 1C82h	MTU5	Timer general register U	TGRU	16	16	5 ICLK
000C 1C84h	MTU5	Timer control register U	TCRU	8	8	5 ICLK
000C 1C86h	MTU5	Timer I/O control register U	TIORU	8	8	5 ICLK
000C 1C90h	MTU5	Timer counter V	TCNTV	16	16, 32	5 ICLK
000C 1C92h	MTU5	Timer general register V	TGRV	16	16	5 ICLK
000C 1C94h	MTU5	Timer control register V	TCRV	8	8	5 ICLK
000C 1C96h	MTU5	Timer I/O control register V	TIORV	8	8	5 ICLK
000C 1CA0h	MTU5	Timer counter W	TCNTW	16	16, 32	5 ICLK
000C 1CA2h	MTU5	Timer general register W	TGRW	16	16	5 ICLK
000C 1CA4h	MTU5	Timer control register W	TCRW	8	8	5 ICLK
000C 1CA6h	MTU5	Timer I/O control register W	TIORW	8	8	5 ICLK
000C 1CB0h	MTU5	Timer status register	TSR	8	8	5 ICLK
000C 1CB2h	MTU5	Timer interrupt enable register	TIER	8	8	5 ICLK
000C 1CB4h	MTU5	Timer start register	TSTR	8	8	5 ICLK
000C 1CB6h	MTU5	Timer compare match clear register	TCNTCMPCLR	8	8	5 ICLK
000C 2000h	GPT	General PWM timer software start register	GTSTR	16	8, 16, 32	3 to 5 ICLK*4
000C 2004h	GPT	General PWM timer hardware source start control register	GTHSCR	16	8, 16, 32	3 to 5 ICLK*4
000C 2006h	GPT	General PWM timer hardware source clear control register	GTHCCR	16	8, 16, 32	3 to 5 ICLK*4
000C 2008h	GPT	General PWM timer hardware start source select register	GTHSSR	16	8, 16, 32	3 to 5 ICLK*4

Table 4.1 List of I/O Registers (Address Order) (25 / 25)

Address	Module Abbreviation	Register Name	Register Abbreviation	Number of Bits	Access Size	Number of Access Cycles
007F FFBAh	FLASH	FCU command register	FCMDR	16	16	2, 3 PCLK*3
007F FFC8h	FLASH	FCU processing switching register	FCPSR	16	16	2, 3 PCLK*3
007F FFCAh	FLASH	Data flash blank check control register	DFLBCCNT	16	16	2, 3 PCLK*3
007F FFCCh	FLASH	Flash P/E status register	FPESTAT	16	16	2, 3 PCLK*3
007F FFCEh	FLASH	Data flash blank check status register	DFLBCSTAT	16	16	2, 3 PCLK*3
007F FFE8h	FLASH	Peripheral clock notification register	PCKAR	16	16	2, 3 PCLK*3

Note 1. This register is not supported by the 100-pin LQFP version.
Note 2. This register is not supported by the product without the CAN function.
Note 3. The number of access states depends on the number of divided cycles for clock synchronization (0 to 1 PCLK).
Note 4. Reading the registers takes 3 cycles of ICLK and writing to the registers takes 5 cycles of ICLK.

Table 4.2 List of I/O Registers (Bit Order) (12 / 30)

Module Abbreviation	Register Abbreviation	Bit 31/23/15/7	Bit 30/22/14/6	Bit 29/21/13/5	Bit 28/20/12/4	Bit 27/19/11/3	Bit 26/18/10/2	Bit 25/17/9/1	Bit 24/16/8/0
RSPI0	SSLP	—	—	—	—	SSLP3	SSLP2	SSLP1	SSLP0
RSPI0	SPPCR	—	—	MOIFE	MOIFV	—	—	SPLP2	SPLP
RSPI0	SPSR	SPRF	—	SPTEF	—	PERF	MODF	IDLNF	OVRF
RSPI0	SPDR	H[15:0]							
		H[15:0]							
		L[15:0]							
		L[15:0]							
RSPI0	SPSCR	—	—	—	—	—	SPSLN[2:0]		
RSPI0	SPSSR	—	SPECM[2:0]			—	SPCP[2:0]		
RSPI0	SPBR	SPR7	SPR6	SPR5	SPR4	SPR3	SPR2	SPR1	SPR0
RSPI0	SPDCR	—	—	SPLW	SPRDTD	SLSEL[1:0]		SPFC[1:0]	
RSPI0	SPCKD	—	—	—	—	—	SCKDL[2:0]		
RSPI0	SSLND	—	—	—	—	—	SLNDL[2:0]		
RSPI0	SPND	—	—	—	—	—	SPNDL[2:0]		
RSPI0	SPCR2	—	—	—	—	PTE	SPIIE	SPOE	SPPE
RSPI0	SPCMD0	SCKDEN	SLNDEN	SPNDEN	LSBF	SPB[3:0]			
		SSLKP	SSLA[2:0]			BRDV[1:0]		CPOL	CPHA
RSPI0	SPCMD1	SCKDEN	SLNDEN	SPNDEN	LSBF	SPB[3:0]			
		SSLKP	SSLA[2:0]			BRDV[1:0]		CPOL	CPHA
RSPI0	SPCMD2	SCKDEN	SLNDEN	SPNDEN	LSBF	SPB[3:0]			
		SSLKP	SSLA[2:0]			BRDV[1:0]		CPOL	CPHA
RSPI0	SPCMD3	SCKDEN	SLNDEN	SPNDEN	LSBF	SPB[3:0]			
		SSLKP	SSLA[2:0]			BRDV[1:0]		CPOL	CPHA
RSPI0	SPCMD4	SCKDEN	SLNDEN	SPNDEN	LSBF	SPB[3:0]			
		SSLKP	SSLA[2:0]			BRDV[1:0]		CPOL	CPHA
RSPI0	SPCMD5	SCKDEN	SLNDEN	SPNDEN	LSBF	SPB[3:0]			
		SSLKP	SSLA[2:0]			BRDV[1:0]		CPOL	CPHA
RSPI0	SPCMD6	SCKDEN	SLNDEN	SPNDEN	LSBF	SPB[3:0]			
		SSLKP	SSLA[2:0]			BRDV[1:0]		CPOL	CPHA
RSPI0	SPCMD7	SCKDEN	SLNDEN	SPNDEN	LSBF	SPB[3:0]			
		SSLKP	SSLA[2:0]			BRDV[1:0]		CPOL	CPHA
S12AD0	ADCSR	ADST	ADCS[1:0]		ADIE	CKS[1:0]		TRGE	EXTRG
S12AD0	ADANS	—	—	CH[1:0]		—	PG002SEL	PG001SEL	PG000SEL
		—	—	—	—	—	PG002EN	PG001EN	PG000EN
S12AD0	ADPG	—	—	—	—	PG002GAIN[3:0]			
		PG001GAIN[3:0]				PG000GAIN[3:0]			
S12AD0	ADCER	ADRFMT	—	ADIEW	ADIE2	DIAGM	DIAGLD	DIAGVAL[1:0]	
		—	—	ACE	—	—	ADPRC[1:0]		SHBYP
S12AD0	ADSTRGR	—	—	—	ADSTRS1[4:0]				
		—	—	—	ADSTRS0[4:0]				
S12AD	ADCMPMD0	—	—	CEN102[1:0]		CEN101[1:0]		CEN100[1:0]	
		—	—	CEN002[1:0]		CEN001[1:0]		CEN000[1:0]	
S12AD	ADCMPMD1	—	VSELL1	VSELH1	CSEL1	—	VSELL0	VSELH0	CSEL0
		—	REFH[2:0]			—	REFL[2:0]		
S12AD	ADCMPNR0	—	—	—	—	C002NR[3:0]			
		C001NR[3:0]				C000NR[3:0]			
S12AD	ADCMPNR1	—	—	—	—	C102NR[3:0]			
		C101NR[3:0]				C100NR[3:0]			
S12AD	ADCMPFR	—	—	C102FLAG	C101FLAG	C100FLAG	C002FLAG	C001FLAG	C000FLAG
S12AD	ADCMPSEL	—	—	—	—	—	—	POERQ	IE
		—	—	SEL102	SEL101	SEL100	SEL002	SEL001	SEL000

Table 4.2 List of I/O Registers (Bit Order) (15 / 30)

Module Abbreviation	Register Abbreviation	Bit 31/23/15/7	Bit 30/22/14/6	Bit 29/21/13/5	Bit 28/20/12/4	Bit 27/19/11/3	Bit 26/18/10/2	Bit 25/17/9/1	Bit 24/16/8/0
SYSTEM	DPSIFR	DNMIF	—	—	DLVDF	—	—	DIRQ1F	DIRQ0F
SYSTEM	DPSIEGR	DNMIEG	—	—	—	—	—	DIRQ1EG	DIRQ0EG
SYSTEM	RSTSR	DPSRSTF	—	—	—	—	LVD2F	LVD1F	PORF
FLASH	FWEPROR	—	—	—	—	—	—	FLWE[1:0]	
SYSTEM	LVDKEYR	KEY[7:0]							
SYSTEM	LVDCR	LVD2E	LVD2RI	—	—	LVD1E	LVD1RI	—	—
SYSTEM	DPSBKR0								
SYSTEM	DPSBKR1								
SYSTEM	DPSBKR2								
SYSTEM	DPSBKR3								
SYSTEM	DPSBKR4								
SYSTEM	DPSBKR5								
SYSTEM	DPSBKR6								
SYSTEM	DPSBKR7								
SYSTEM	DPSBKR8								
SYSTEM	DPSBKR9								
SYSTEM	DPSBKR10								
SYSTEM	DPSBKR11								
SYSTEM	DPSBKR12								
SYSTEM	DPSBKR13								
SYSTEM	DPSBKR14								
SYSTEM	DPSBKR15								
SYSTEM	DPSBKR16								
SYSTEM	DPSBKR17								
SYSTEM	DPSBKR18								
SYSTEM	DPSBKR19								
SYSTEM	DPSBKR20								
SYSTEM	DPSBKR21								
SYSTEM	DPSBKR22								
SYSTEM	DPSBKR23								
SYSTEM	DPSBKR24								
SYSTEM	DPSBKR25								
SYSTEM	DPSBKR26								
SYSTEM	DPSBKR27								
SYSTEM	DPSBKR28								
SYSTEM	DPSBKR29								
SYSTEM	DPSBKR30								
SYSTEM	DPSBKR31								
POE	ICSR1	—	—	—	POE0F	—	—	—	PIE1
		—	—	—	—	—	—	POE0M[1:0]	
POE	OCSR1	OSF1	—	—	—	—	—	OCE1	OIE1
		—	—	—	—	—	—	—	—
POE	ICSR2	—	—	—	POE4F	—	—	—	PIE2
		—	—	—	—	—	—	POE4M[1:0]	
POE	OCSR2	OSF2	—	—	—	—	—	OCE2	OIE2
		—	—	—	—	—	—	—	—
POE	ICSR3	—	—	—	POE8F	—	—	POE8E	PIE3
		—	—	—	—	—	—	POE8M[1:0]	
POE	SPOER	—	—	—	GPT23HIZ	GPT01HIZ	MTUCH0HIZ	MTUCH67HIZ	MTUCH34HIZ
POE	POECR1	—	—	—	—	MTU0DZE	MTU0CZE	MTU0BZE	MTU0AZE

Table 4.2 List of I/O Registers (Bit Order) (18 / 30)

Module Abbreviation	Register Abbreviation	Bit 31/23/15/7	Bit 30/22/14/6	Bit 29/21/13/5	Bit 28/20/12/4	Bit 27/19/11/3	Bit 26/18/10/2	Bit 25/17/9/1	Bit 24/16/8/0
CAN0*3	AFSR	—	—	—	—	—	—	—	—
		—	—	—	—	—	—	—	—
CAN0*3	TCR	—	—	—	—	—	TSTM[1:0]		TSTE
LIN0	LWBR	—	—	—	—	—	—	—	LWBR0
LIN0	LBRP0								
LIN0	LBRP1								
LIN0	LSTC								LSTM
LIN0	L0MD	—	—	—	—	LCKS[1:0]		—	—
LIN0	L0BRK	—	—	BDT[1:0]		BLT[3:0]			
LIN0	L0SPC	—	—	IBS[1:0]		—	IBSH[2:0]		
LIN0	L0WUP	WUTL[3:0]				—	—	—	—
LIN0	L0IE	—	—	—	—	—	ERRIE	FRCIE	FTCIE
LIN0	L0EDE	—	—	—	—	FERE	FTERE	PBERE	BERE
LIN0	L0C	—	—	—	—	—	—	OM1	OM0
LIN0	L0TC	—	—	—	—	—	—	RTS	FTS
LIN0	L0MST	—	—	—	—	—	—	OMM1	OMM0
LIN0	L0ST	HTRC	D1RC	—	—	ERR	—	FRC	FTC
LIN0	L0EST	—	—	CSER	—	FER	FTER	PBER	BER
LIN0	L0RFC	—	FSM	CSM	RFT	RFDL[3:0]			
LIN0	L0IDB	IDP		ID					
LIN0	L0CBR								
LIN0	L0DB1								
LIN0	L0DB2								
LIN0	L0DB3								
LIN0	L0DB4								
LIN0	L0DB5								
LIN0	L0DB6								
LIN0	L0DB7								
LIN0	L0DB8								
MTU3	TCR	CCLR[2:0]		CKEG[1:0]			TPSC[2:0]		
MTU4	TCR	CCLR[2:0]		CKEG[1:0]			TPSC[2:0]		
MTU3	TMDR1	—	—	BFB	BFA	MD[3:0]			
MTU4	TMDR1	—	—	BFB	BFA	MD[3:0]			
MTU3	TIORH	IOB[3:0]				IOA[3:0]			
MTU3	TIORL	IOD[3:0]				IOC[3:0]			
MTU4	TIORH	IOB[3:0]				IOA[3:0]			
MTU4	TIORL	IOD[3:0]				IOC[3:0]			
MTU3	TIER	TTGE	—	—	TCIEV	TGIED	TGIEC	TGIEB	TGIEA
MTU4	TIER	TTGE	TTGE2	—	TCIEV	TGIED	TGIEC	TGIEB	TGIEA
MTU	TOERA	—	—	OE4D	OE4C	OE3D	OE4B	OE4A	OE3B
MTU	TGCRA	—	BDC	N	P	FB	WF	VF	UF
MTU	TOCR1A	—	PSYE	—	—	TOCL	TOCS	OLSN	OLSP
MTU	TOCR2A	BF[1:0]		OLS3N	OLS3P	OLS2N	OLS2P	OLS1N	OLS1P
MTU3	TCNT								
MTU4	TCNT								
MTU	TCDRA								
MTU	TDDRA								

Table 5.2 DC Characteristics (1) (3 / 3)

Note: Items for which test conditions are not specifically stated in the table below have the same values under conditions 1 to 3.

Condition 1: VCC = PLLVCC = 2.7 to 3.6 V, VSS = PLLVSS = AVSS0 = AVSS = VREFL0 = 0 V
AVCC0 = AVCC = 3.0 to 3.6 V, VREFH0 = 3.0 V to AVCC0, VREF = 3.0 V to AVCC

Condition 2: VCC = PLLVCC = 2.7 to 3.6 V, VSS = PLLVSS = AVSS0 = AVSS = VREFL0 = 0V
AVCC0 = AVCC = 4.0 to 5.5 V, VREFH0 = 4.0 V to AVCC0, VREF = 4.0 V to AVCC

Condition 3: VCC = PLLVCC = 4.0 to 5.5 V, VSS = PLLVSS = AVSS0 = AVSS = VREFL0 = 0V
AVCC0 = AVCC = 4.0 to 5.5 V, VREFH0 = 4.0 V to AVCC0, VREF = 4.0 V to AVCC
Ta = Topr. Ta is the same under conditions 1 to 3.

Item		Symbol	Min.	Typ.	Max.	Unit	Test Conditions
Input capacitance	All input pins (except for ports PB1 and PB2)	C_{in}	-	-	15	pF	V_{in} = 0 V, f = 1 MHz, T_a = 25°C
	Ports PB1 and PB2		-	-	30		

Note 1. This includes the multiplexed input pins, except in cases where port pins PB1 and PB2 are used as RIIC input pins or port pins P22 to P24, P30, PA3 to PA5, PB0, PD0 to PD2, or PD6 are used as RSPI input pins.

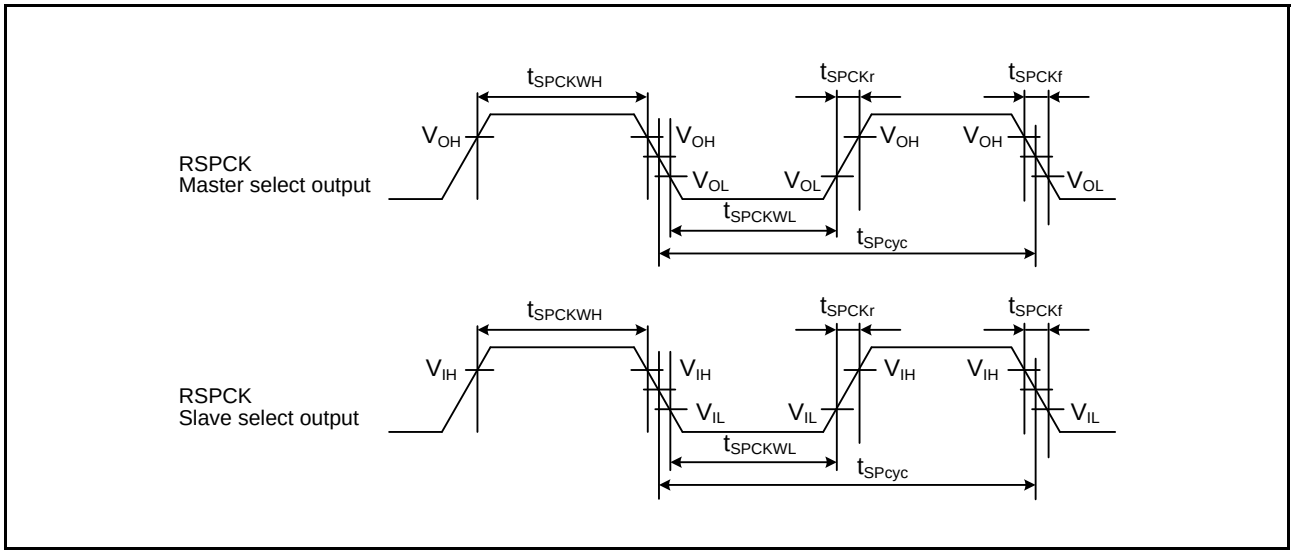

Figure 5.11 RSPI Clock Timing

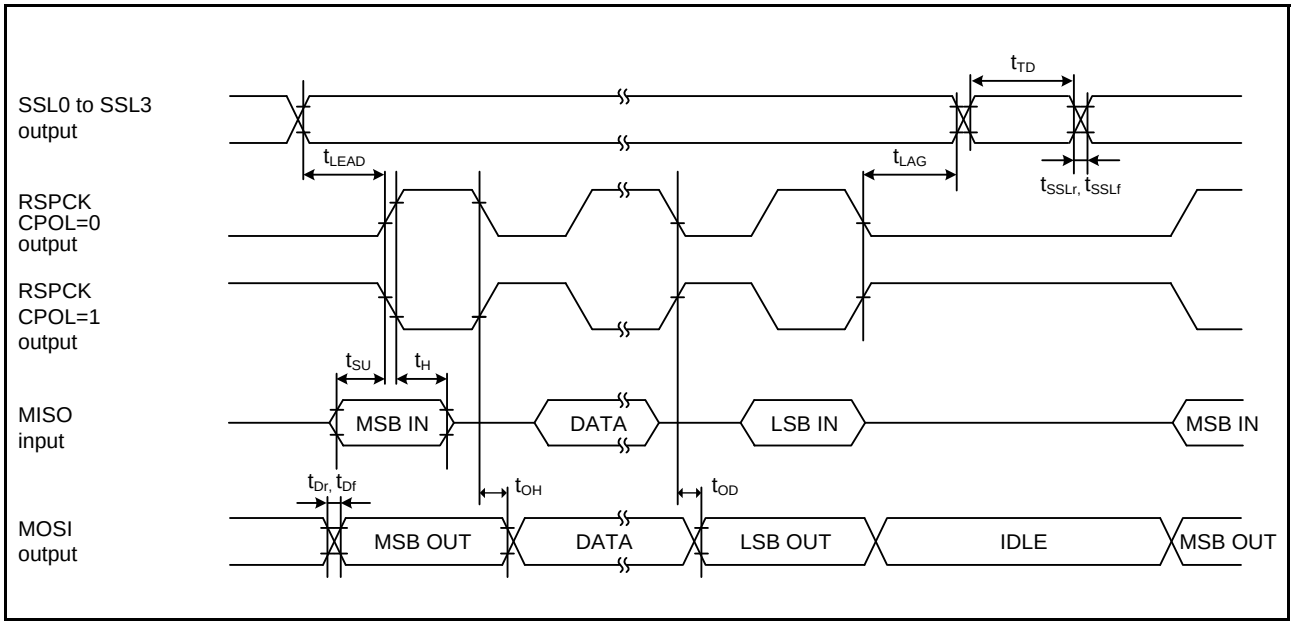

Figure 5.12 RSPI Timing (Master, CPHA = 0)

5.8 Data Flash (Flash Memory for Data Storage) Characteristics

Table 5.23 Data Flash (Flash Memory for Data Storage) Characteristics (1)

Note:Items for which test conditions are not specifically stated in the table below have the same values under conditions 1 to 3.

Condition 1: VCC = PLLVCC = 2.7 to 3.6 V, VSS = PLLVSS = AVSS0 = AVSS = VREFL0 = 0 V
AVCC0 = AVCC = 3.0 to 3.6 V, VREFH0 = 3.0 V to AVCC0, VREF = 3.0 V to AVCC

Condition 2: VCC = PLLVCC = 2.7 to 3.6 V, VSS = PLLVSS = AVSS0 = AVSS = VREFL0 = 0 V
AVCC0 = AVCC = 4.0 to 5.5 V, VREFH0 = 4.0 V to AVCC0, VREF = 4.0 V to AVCC

Condition 3: VCC = PLLVCC = 4.0 to 5.5 V, VSS = PLLVSS = AVSS0 = AVSS = VREFL0 = 0 V
AVCC0 = AVCC = 4.0 to 5.5 V, VREFH0 = 4.0 V to AVCC0, VREF = 4.0 V to AVCC
Temperature range for the programming/erasure operation:
Ta = Topr. Ta is the same under conditions 1 to 3.

Item	Symbol	Min.	Typ.	Max.	Unit	Test Conditions
Rewrite/erase cycle*1	N_{DPEC}	30000	—	—	Times	
Data hold time	t_{DDRP}	30*2	—	—	Year	Ta = +85C°

Note 1. Definition of rewrite/erase cycle:
The rewrite/erase cycle is the number of erasing for each block. When the rewrite/erase cycle is n times (n = 30000), erasing can be performed n times for each block. For instance, when 128-byte writing is performed 16 times for different addresses in 2-Kbyte block and then the entire block is erased, the rewrite/erase cycle is counted as one. However, writing to the same address for several times as one erasing is not enabled (overwriting is prohibited).

Note 2. The value is obtained from the reliability test.

Table 5.24 Data Flash (Flash Memory for Data Storage) Characteristics (2)

Note:Items for which test conditions are not specifically stated in the table below have the same values under conditions 1 to 3.

Condition 1: VCC = PLLVCC = 2.7 to 3.6 V, VSS = PLLVSS = AVSS0 = AVSS = VREFL0 = 0 V
AVCC0 = AVCC = 3.0 to 3.6 V, VREFH0 = 3.0 V to AVCC0, VREF = 3.0 V to AVCC

Condition 2: VCC = PLLVCC = 2.7 to 3.6 V, VSS = PLLVSS = AVSS0 = AVSS = VREFL0 = 0 V
AVCC0 = AVCC = 4.0 to 5.5 V, VREFH0 = 4.0 V to AVCC0, VREF = 4.0 V to AVCC

Condition 3: VCC = PLLVCC = 4.0 to 5.5 V, VSS = PLLVSS = AVSS0 = AVSS = VREFL0 = 0 V
AVCC0 = AVCC = 4.0 to 5.5 V, VREFH0 = 4.0 V to AVCC0, VREF = 4.0 V to AVCC
Temperature range for the programming/erasure operation:
Ta = Topr. Ta is the same under conditions 1 to 3.

Item		Symbol	Min.	Typ.	Max.	Unit	Test Conditions
Programming time	8 bytes	t_{DP8}	—	0.4	2	ms	PCLK = 50 MHz
	128 bytes	t_{DP128}	—	1	5	ms	
Erasure time	2 Kbytes	t_{DE2K}	—	70	250	ms	PCLK = 50 MHz
Blank check time	8 bytes	t_{DBC8}	—	—	30	μs	PCLK = 50 MHz
	2 Kbytes	t_{DBC2K}	—	—	0.7	ms	
Suspend delay time during writing		t_{DSPD}	—	—	120	μs	Figure 5.24 PCLK = 50 MHz
First suspend delay time during erasing (in suspend priority mode)		t_{DSESD1}	—	—	120	μs	
Second suspend delay time during erasing (in suspend priority mode)		t_{DSESD2}	—	—	1.7	ms	
Suspend delay time during erasing (in erasure priority mode)		t_{DSEED}	—	—	1.7	ms	

JEITA Package Code	RENESAS Code	Previous Code	MASS[Typ.]
P-LQFP100-14x14-0.50	PLQP0100KB-A	100P6Q-A / FP-100U / FP-100UV	0.6g

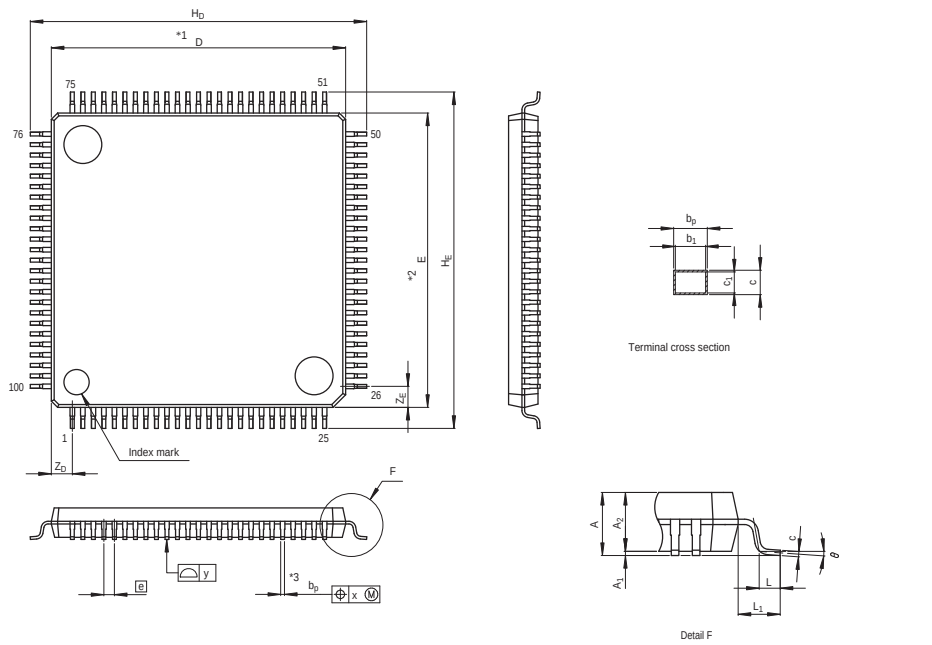

NOTE)
1. DIMENSIONS "*1" AND "*2" DO NOT INCLUDE MOLD FLASH.
2. DIMENSION "*3" DOES NOT INCLUDE TRIM OFFSET.

Reference Symbol	Dimension in Millimeters		
	Min	Nom	Max
D	13.9	14.0	14.1
E	13.9	14.0	14.1
A_2	—	1.4	—
H_D	15.8	16.0	16.2
H_E	15.8	16.0	16.2
A	—	—	1.7
A_1	0.05	0.1	0.15
b_p	0.15	0.20	0.25
b_1	—	0.18	—
c	0.09	0.145	0.20
c_1	—	0.125	—
θ	0°	—	8°
e	—	0.5	—
x	—	—	0.08
y	—	—	0.08
Z_D	—	1.0	—
Z_E	—	1.0	—
L	0.35	0.5	0.65
L_1	—	1.0	—

Figure B 100-Pin LQFP (PLQP0100KB-A) Package Dimensions

Notice

1. Descriptions of circuits, software and other related information in this document are provided only to illustrate the operation of semiconductor products and application examples. You are fully responsible for the incorporation of these circuits, software, and information in the design of your equipment. Renesas Electronics assumes no responsibility for any losses incurred by you or third parties arising from the use of these circuits, software, or information.
2. Renesas Electronics has used reasonable care in preparing the information included in this document, but Renesas Electronics does not warrant that such information is error free. Renesas Electronics assumes no liability whatsoever for any damages incurred by you resulting from errors in or omissions from the information included herein.
3. Renesas Electronics does not assume any liability for infringement of patents, copyrights, or other intellectual property rights of third parties by or arising from the use of Renesas Electronics products or technical information described in this document. No license, express, implied or otherwise, is granted hereby under any patents, copyrights or other intellectual property rights of Renesas Electronics or others.
4. You should not alter, modify, copy, or otherwise misappropriate any Renesas Electronics product, whether in whole or in part. Renesas Electronics assumes no responsibility for any losses incurred by you or third parties arising from such alteration, modification, copy or otherwise misappropriation of Renesas Electronics product.
5. Renesas Electronics products are classified according to the following two quality grades: "Standard" and "High Quality". The recommended applications for each Renesas Electronics product depends on the product's quality grade, as indicated below.
   "Standard": Computers; office equipment; communications equipment; test and measurement equipment; audio and visual equipment; home electronic appliances; machine tools; personal electronic equipment; and industrial robots etc.
   "High Quality": Transportation equipment (automobiles, trains, ships, etc.); traffic control systems; anti-disaster systems; anti-crime systems; and safety equipment etc.
   Renesas Electronics products are neither intended nor authorized for use in products or systems that may pose a direct threat to human life or bodily injury (artificial life support devices or systems, surgical implantations etc.), or may cause serious property damages (nuclear reactor control systems, military equipment etc.). You must check the quality grade of each Renesas Electronics product before using it in a particular application. You may not use any Renesas Electronics product for any application for which it is not intended. Renesas Electronics shall not be in any way liable for any damages or losses incurred by you or third parties arising from the use of any Renesas Electronics product for which the product is not intended by Renesas Electronics.
6. You should use the Renesas Electronics products described in this document within the range specified by Renesas Electronics, especially with respect to the maximum rating, operating supply voltage range, movement power voltage range, heat radiation characteristics, installation and other product characteristics. Renesas Electronics shall have no liability for malfunctions or damages arising out of the use of Renesas Electronics products beyond such specified ranges.
7. Although Renesas Electronics endeavors to improve the quality and reliability of its products, semiconductor products have specific characteristics such as the occurrence of failure at a certain rate and malfunctions under certain use conditions. Further, Renesas Electronics products are not subject to radiation resistance design. Please be sure to implement safety measures to guard them against the possibility of physical injury, and injury or damage caused by fire in the event of the failure of a Renesas Electronics product, such as safety design for hardware and software including but not limited to redundancy, fire control and malfunction prevention, appropriate treatment for aging degradation or any other appropriate measures. Because the evaluation of microcomputer software alone is very difficult, please evaluate the safety of the final products or systems manufactured by you.
8. Please contact a Renesas Electronics sales office for details as to environmental matters such as the environmental compatibility of each Renesas Electronics product. Please use Renesas Electronics products in compliance with all applicable laws and regulations that regulate the inclusion or use of controlled substances, including without limitation, the EU RoHS Directive. Renesas Electronics assumes no liability for damages or losses occurring as a result of your noncompliance with applicable laws and regulations.
9. Renesas Electronics products and technology may not be used for or incorporated into any products or systems whose manufacture, use, or sale is prohibited under any applicable domestic or foreign laws or regulations. You should not use Renesas Electronics products or technology described in this document for any purpose relating to military applications or use by the military, including but not limited to the development of weapons of mass destruction. When exporting the Renesas Electronics products or technology described in this document, you should comply with the applicable export control laws and regulations and follow the procedures required by such laws and regulations.
10. It is the responsibility of the buyer or distributor of Renesas Electronics products, who distributes, disposes of, or otherwise places the product with a third party, to notify such third party in advance of the contents and conditions set forth in this document, Renesas Electronics assumes no responsibility for any losses incurred by you or third parties as a result of unauthorized use of Renesas Electronics products.
11. This document may not be reproduced or duplicated in any form, in whole or in part, without prior written consent of Renesas Electronics.
12. Please contact a Renesas Electronics sales office if you have any questions regarding the information contained in this document or Renesas Electronics products, or if you have any other inquiries.

(Note 1) "Renesas Electronics" as used in this document means Renesas Electronics Corporation and also includes its majority-owned subsidiaries.

(Note 2) "Renesas Electronics product(s)" means any product developed or manufactured by or for Renesas Electronics.

SALES OFFICES Renesas Electronics Corporation http://www.renesas.com

Refer to "http://www.renesas.com/" for the latest and detailed information.

Renesas Electronics America Inc.
2880 Scott Boulevard Santa Clara, CA 95050-2554, U.S.A.
Tel: +1-408-588-6000, Fax: +1-408-588-6130

Renesas Electronics Canada Limited
1101 Nicholson Road, Newmarket, Ontario L3Y 9C3, Canada
Tel: +1-905-898-5441, Fax: +1-905-898-3220

Renesas Electronics Europe Limited
Dukes Meadow, Millboard Road, Bourne End, Buckinghamshire, SL8 5FH, U.K
Tel: +44-1628-651-700, Fax: +44-1628-651-804

Renesas Electronics Europe GmbH
Arcadiastrasse 10, 40472 Düsseldorf, Germany
Tel: +49-211-65030, Fax: +49-211-6503-1327

Renesas Electronics (China) Co., Ltd.
7th Floor, Quantum Plaza, No.27 ZhiChunLu Haidian District, Beijing 100083, P.R.China
Tel: +86-10-8235-1155, Fax: +86-10-8235-7679

Renesas Electronics (Shanghai) Co., Ltd.
Unit 301, Tower A, Central Towers, 555 LanGao Rd., Putuo District, Shanghai, China
Tel: +86-21-2226-0888, Fax: +86-21-2226-0999

Renesas Electronics Hong Kong Limited
Unit 1601-1613, 16/F., Tower 2, Grand Century Place, 193 Prince Edward Road West, Mongkok, Kowloon, Hong Kong
Tel: +852-2886-9318, Fax: +852 2886-9022/9044

Renesas Electronics Taiwan Co., Ltd.
13F, No. 363, Fu Shing North Road, Taipei, Taiwan
Tel: +886-2-8175-9600, Fax: +886 2-8175-9670

Renesas Electronics Singapore Pte. Ltd.
80 Bendemeer Road, Unit #06-02 Hyflux Innovation Centre Singapore 339949
Tel: +65-6213-0200, Fax: +65-6213-0300

Renesas Electronics Malaysia Sdn.Bhd.
Unit 906, Block B, Menara Amcorp, Amcorp Trade Centre, No. 18, Jln Persiaran Barat, 46050 Petaling Jaya, Selangor Darul Ehsan, Malaysia
Tel: +60-3-7955-9390, Fax: +60-3-7955-9510

Renesas Electronics Korea Co., Ltd.
12F., 234 Teheran-ro, Gangnam-Gu, Seoul, 135-080, Korea
Tel: +82-2-558-3737, Fax: +82-2-558-5141

© 2014 Renesas Electronics Corporation. All rights reserved.
Colophon 3.0