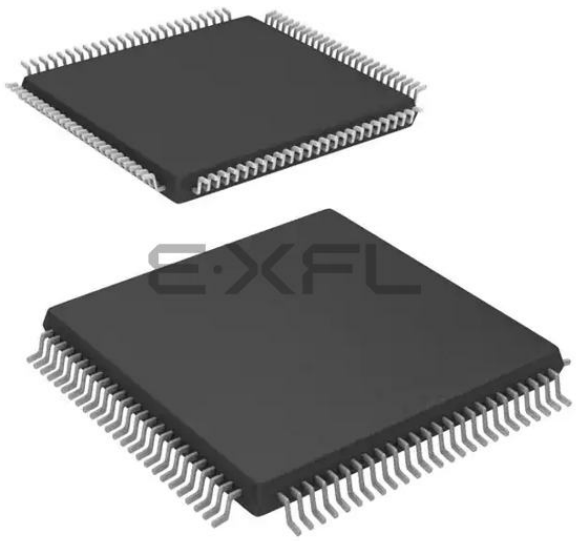

Welcome to E-XFL.COM

Understanding Embedded - FPGAs (Field Programmable Gate Array)

Embedded - FPGAs, or Field Programmable Gate Arrays, are advanced integrated circuits that offer unparalleled flexibility and performance for digital systems. Unlike traditional fixed-function logic devices, FPGAs can be programmed and reprogrammed to execute a wide array of logical operations, enabling customized functionality tailored to specific applications. This reprogrammability allows developers to iterate designs quickly and implement complex functions without the need for custom hardware.

Applications of Embedded - FPGAs

The versatility of Embedded - FPGAs makes them indispensable in numerous fields. In telecommunications.

Details	
Product Status	Active
Number of LABs/CLBs	-
Number of Logic Elements/Cells	-
Total RAM Bits	36864
Number of I/O	68
Number of Gates	250000
Voltage - Supply	1.425V ~ 1.575V
Mounting Type	Surface Mount
Operating Temperature	0°C ~ 85°C (TJ)
Package / Case	100-TQFP
Supplier Device Package	100-VQFP (14x14)
Purchase URL	https://www.e-xfl.com/product-detail/microchip-technology/a3p250-1vqg100

Table 2-20 • Summary of Maximum and Minimum DC Input and Output Levels Applicable to Commercial and Industrial Conditions—Software Default Settings Applicable to Standard I/O Banks

I/O Standard	Drive Strength	Equiv. Software Default Drive Strength Option[2]	Slew Rate	VIL		VIH		VOL	VOH	IOL[1] mA	IOH[1] mA
				Min V	Max V	Min V	Max V	Max V	Min V		
3.3 V LVTTL / 3.3 V LVCMOS	8 mA	8 mA	High	–0.3	0.8	2	3.6	0.4	2.4	8	8
3.3 V LVCMOS Wide Range[3]	100 µA	8 mA	High	–0.3	0.8	2	3.6	0.2	VCCI – 0.2	0.1	0.1
2.5 V LVCMOS	8 mA	8 mA	High	–0.3	0.7	1.7	2.7	0.7	1.7	8	8
1.8 V LVCMOS	4 mA	4 mA	High	–0.3	0.35 * VCCI	0.65 * VCCI	3.6	0.45	VCCI – 0.45	4	4
1.5 V LVCMOS	2 mA	2 mA	High	–0.3	0.35 * VCCI	0.65 * VCCI	3.6	0.25 * VCCI	0.75 * VCCI	2	2

Notes:

1. *Currents are measured at 85°C junction temperature.*
2. *3.3 V LVCMOS wide range is applicable to 100 µA drive strength only. The configuration will NOT operate at the equivalent software default drive strength. These values are for Normal Ranges ONLY.*
3. *All LVCMOS 3.3 V software macros support LVCMOS 3.3 V wide range as specified in the JESD-8B specification.*

Table 2-21 • Summary of Maximum and Minimum DC Input Levels Applicable to Commercial and Industrial Conditions

DC I/O Standards	Commercial[1]		Industrial[2]	
	IIL[3] µA	IIH[4] µA	IIL[3] µA	IIH[4] µA
3.3 V LVTTL / 3.3 V LVCMOS	10	10	15	15
3.3 V LVCMOS Wide Range	10	10	15	15
2.5 V LVCMOS	10	10	15	15
1.8 V LVCMOS	10	10	15	15
1.5 V LVCMOS	10	10	15	15
3.3 V PCI	10	10	15	15
3.3 V PCI-X	10	10	15	15

Notes:

1. *Commercial range (0°C < T_A < 70°C)*
2. *Industrial range (–40°C < T_A < 85°C)*
3. *IIL is the input leakage current per I/O pin over recommended operation conditions where –0.3V < V_{IN} <V_{IL}.*
4. *IIH is the input leakage current per I/O pin over recommended operating conditions VIH < VIN < VCCI. Input current is larger when operating outside recommended ranges.*

Summary of I/O Timing Characteristics – Default I/O Software Settings

***Table 2-22* • Summary of AC Measuring Points**

Standard	Measuring Trip Point (V_{trip})
3.3 V LVTTL / 3.3 V LVCMOS	1.4 V
3.3 V LVCMOS Wide Range	1.4 V
2.5 V LVCMOS	1.2 V
1.8 V LVCMOS	0.90 V
1.5 V LVCMOS	0.75 V
3.3 V PCI	0.285 * VCCI (RR)
	0.615 * VCCI (FF)
3.3 V PCI-X	0.285 * VCCI (RR)
	0.615 * VCCI (FF)

***Table 2-23* • I/O AC Parameter Definitions**

Parameter	Parameter Definition
t_{DP}	Data to Pad delay through the Output Buffer
t_{PY}	Pad to Data delay through the Input Buffer
t_{DOUT}	Data to Output Buffer delay through the I/O interface
t_{EOUT}	Enable to Output Buffer Tristate Control delay through the I/O interface
t_{DIN}	Input Buffer to Data delay through the I/O interface
t_{HZ}	Enable to Pad delay through the Output Buffer—High to Z
t_{ZH}	Enable to Pad delay through the Output Buffer—Z to High
t_{LZ}	Enable to Pad delay through the Output Buffer—Low to Z
t_{ZL}	Enable to Pad delay through the Output Buffer—Z to Low
t_{ZHS}	Enable to Pad delay through the Output Buffer with delayed enable—Z to High
t_{ZLS}	Enable to Pad delay through the Output Buffer with delayed enable—Z to Low

Table 2-30 • I/O Output Buffer Maximum Resistances[1]
Applicable to Standard I/O Banks

Standard	Drive Strength	$R_{PULL\text{-}DOWN}$ (Ω)[2]	$R_{PULL\text{-}UP}$ (Ω)[3]
3.3 V LVTTL / 3.3 V LVCMOS	2 mA	100	300
	4 mA	100	300
	6 mA	50	150
	8 mA	50	150
3.3 V LVCMOS Wide Range[4]	100 µA	Same as regular 3.3 V LVCMOS	Same as regular 3.3 V LVCMOS
2.5 V LVCMOS	2 mA	100	200
	4 mA	100	200
	6 mA	50	100
	8 mA	50	100
1.8 V LVCMOS	2 mA	200	225
	4 mA	100	112
1.5 V LVCMOS	2 mA	200	224

Notes:

1. *These maximum values are provided for informational reasons only. Minimum output buffer resistance values depend on VCCI, drive strength selection, temperature, and process. For board design considerations and detailed output buffer resistances, use the corresponding IBIS models located at http://www.microsemi.com/soc/download/ibis/default.aspx.*
2. $R_{(PULL\text{-}DOWN\text{-}MAX)}$ = (VOLspec) / IOLspec
3. $R_{(PULL\text{-}UP\text{-}MAX)}$ = (VCCImax – VOHspec) / IOHspec
4. *All LVCMOS 3.3 V software macros support LVCMOS 3.3 V wide range as specified in the JESD-8B specification.*

Table 2-31 • I/O Weak Pull-Up/Pull-Down Resistances
Minimum and Maximum Weak Pull-Up/Pull-Down Resistance Values

VCCI	$R_{(WEAK\ PULL\text{-}UP)}$[1] (Ω)		$R_{(WEAK\ PULL\text{-}DOWN)}$[2] (Ω)	
	Min	Max	Min	Max
3.3 V	10 k	45 k	10 k	45 k
3.3 V (wide range I/Os)	10 k	45 k	10 k	45 k
2.5 V	11 k	55 k	12 k	74 k
1.8 V	18 k	70 k	17 k	110 k
1.5 V	19 k	90 k	19 k	140 k

Notes:

1. $R_{(WEAK\ PULL\text{-}UP\text{-}MAX)} = (VCCI_{MAX} - VOH_{spec}) / I_{(WEAK\ PULL\text{-}UP\text{-}MIN)}$
2. $R_{(WEAK\ PULL\text{-}DOWN\text{-}MAX)} = (VOL_{spec}) / I_{(WEAK\ PULL\text{-}DOWN\text{-}MIN)}$

Timing Characteristics

***Table 2-41* • 3.3 V LVTTL / 3.3 V LVCMOS High Slew**
Commercial-Case Conditions: T_J = 70°C, Worst-Case VCC = 1.425 V, Worst-Case VCCI = 3.0 V
Applicable to Advanced I/O Banks

Drive Strength	Speed Grade	t_{DOUT}	t_{DP}	t_{DIN}	t_{PY}	t_{EOUT}	t_{ZL}	t_{ZH}	t_{LZ}	t_{HZ}	t_{ZLS}	t_{ZHS}	Units
2 mA	Std.	0.66	7.66	0.04	1.02	0.43	7.80	6.59	2.65	2.61	10.03	8.82	ns
	–1	0.56	6.51	0.04	0.86	0.36	6.63	5.60	2.25	2.22	8.54	7.51	ns
	–2	0.49	5.72	0.03	0.76	0.32	5.82	4.92	1.98	1.95	7.49	6.59	ns
4 mA	Std.	0.66	7.66	0.04	1.02	0.43	7.80	6.59	2.65	2.61	10.03	8.82	ns
	–1	0.56	6.51	0.04	0.86	0.36	6.63	5.60	2.25	2.22	8.54	7.51	ns
	–2	0.49	5.72	0.03	0.76	0.32	5.82	4.92	1.98	1.95	7.49	6.59	ns
6 mA	Std.	0.66	4.91	0.04	1.02	0.43	5.00	4.07	2.99	3.20	7.23	6.31	ns
	–1	0.56	4.17	0.04	0.86	0.36	4.25	3.46	2.54	2.73	6.15	5.36	ns
	–2	0.49	3.66	0.03	0.76	0.32	3.73	3.04	2.23	2.39	5.40	4.71	ns
8 mA	Std.	0.66	4.91	0.04	1.02	0.43	5.00	4.07	2.99	3.20	7.23	6.31	ns
	–1	0.56	4.17	0.04	0.86	0.36	4.25	3.46	2.54	2.73	6.15	5.36	ns
	–2	0.49	3.66	0.03	0.76	0.32	3.73	3.04	2.23	2.39	5.40	4.71	ns
12 mA	Std.	0.66	3.53	0.04	1.02	0.43	3.60	2.82	3.21	3.58	5.83	5.06	ns
	–1	0.56	3.00	0.04	0.86	0.36	3.06	2.40	2.73	3.05	4.96	4.30	ns
	–2	0.49	2.64	0.03	0.76	0.32	2.69	2.11	2.40	2.68	4.36	3.78	ns
16 mA	Std.	0.66	3.33	0.04	1.02	0.43	3.39	2.56	3.26	3.68	5.63	4.80	ns
	–1	0.56	2.83	0.04	0.86	0.36	2.89	2.18	2.77	3.13	4.79	4.08	ns
	–2	0.49	2.49	0.03	0.76	0.32	2.53	1.91	2.44	2.75	4.20	3.58	ns
24 mA	Std.	0.66	3.08	0.04	1.02	0.43	3.13	2.12	3.32	4.06	5.37	4.35	ns
	–1	0.56	2.62	0.04	0.86	0.36	2.66	1.80	2.83	3.45	4.57	3.70	ns
	–2	0.49	2.30	0.03	0.76	0.32	2.34	1.58	2.48	3.03	4.01	3.25	ns

Notes:

1. *Software default selection highlighted in gray.*
2. *For specific junction temperature and voltage supply levels, refer to Table 2-6 on page 2-6 for derating values.*

Table 2-93 • **Minimum and Maximum DC Input and Output Levels**

DC Parameter	Description	Min.	Max.	Min.	Max.	Min.	Max.	Units
VCCI	Supply Voltage	3.0		3.3		3.6		V
VOL	Output Low Voltage	0.96	1.27	1.06	1.43	1.30	1.57	V
VOH	Output High Voltage	1.8	2.11	1.92	2.28	2.13	2.41	V
VIL, VIH	Input Low, Input High Voltages	0	3.6	0	3.6	0	3.6	V
VODIFF	Differential Output Voltage	0.625	0.97	0.625	0.97	0.625	0.97	V
VOCM	Output Common-Mode Voltage	1.762	1.98	1.762	1.98	1.762	1.98	V
VICM	Input Common-Mode Voltage	1.01	2.57	1.01	2.57	1.01	2.57	V
VIDIFF	Input Differential Voltage	300		300		300		mV

Table 2-94 • **AC Waveforms, Measuring Points, and Capacitive Loads**

Input Low (V)	Input High (V)	Measuring Point* (V)
1.64	1.94	Cross point

*Note: *Measuring point = V_{trip}. See Table 2-22 on page 2-22 for a complete table of trip points.*

Timing Characteristics

Table 2-95 • **LVPECL**
Commercial-Case Conditions: T_J = 70°C, Worst-Case VCC = 1.425 V, Worst-Case VCCI = 3.0 V

Speed Grade	t_{DOUT}	t_{DP}	t_{DIN}	t_{PY}	Units
Std.	0.66	1.80	0.04	1.40	ns
–1	0.56	1.53	0.04	1.19	ns
–2	0.49	1.34	0.03	1.05	ns

Note: For specific junction temperature and voltage supply levels, refer to Table 2-6 on page 2-6 for derating values.

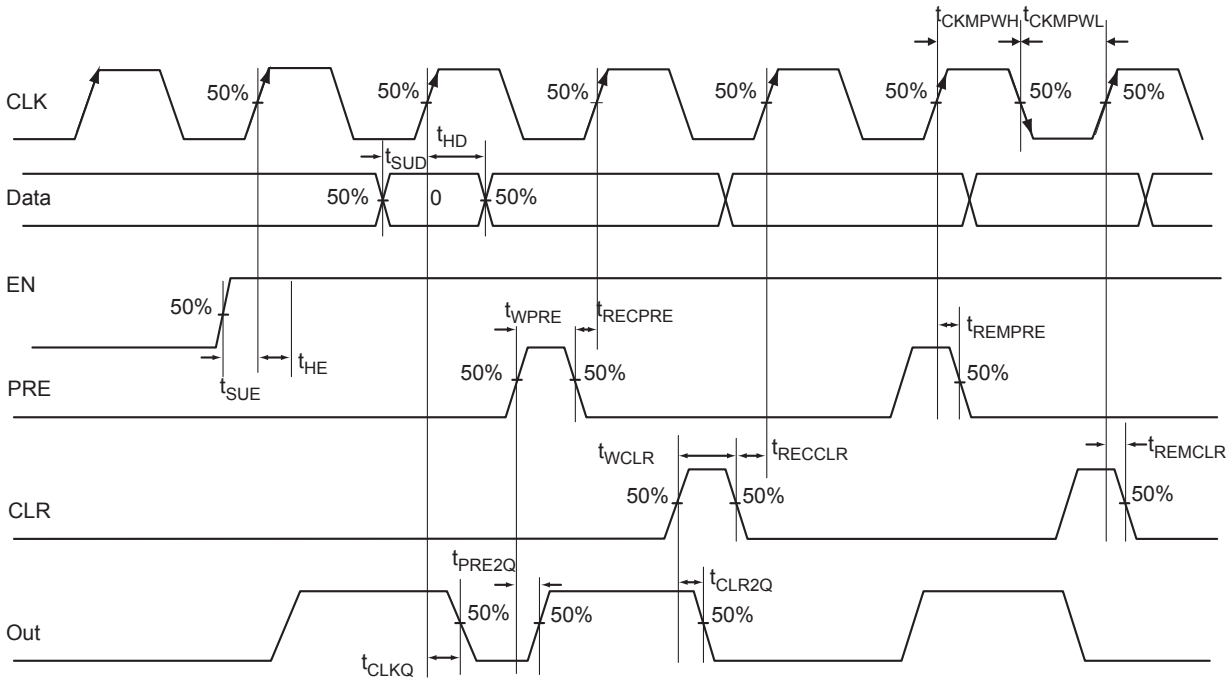

Figure 2-27 **• Timing Model and Waveforms**

Timing Characteristics

Table 2-106 **• Register Delays**
Commercial-Case Conditions: T_J = 70°C, Worst-Case VCC = 1.425 V

Parameter	Description	–2	–1	Std.	Units
t_{CLKQ}	Clock-to-Q of the Core Register	0.55	0.63	0.74	ns
t_{SUD}	Data Setup Time for the Core Register	0.43	0.49	0.57	ns
t_{HD}	Data Hold Time for the Core Register	0.00	0.00	0.00	ns
t_{SUE}	Enable Setup Time for the Core Register	0.45	0.52	0.61	ns
t_{HE}	Enable Hold Time for the Core Register	0.00	0.00	0.00	ns
t_{CLR2Q}	Asynchronous Clear-to-Q of the Core Register	0.40	0.45	0.53	ns
t_{PRE2Q}	Asynchronous Preset-to-Q of the Core Register	0.40	0.45	0.53	ns
t_{REMCLR}	Asynchronous Clear Removal Time for the Core Register	0.00	0.00	0.00	ns
t_{RECCLR}	Asynchronous Clear Recovery Time for the Core Register	0.22	0.25	0.30	ns
t_{REMPRE}	Asynchronous Preset Removal Time for the Core Register	0.00	0.00	0.00	ns
t_{RECPRE}	Asynchronous Preset Recovery Time for the Core Register	0.22	0.25	0.30	ns
t_{WCLR}	Asynchronous Clear Minimum Pulse Width for the Core Register	0.22	0.25	0.30	ns
t_{WPRE}	Asynchronous Preset Minimum Pulse Width for the Core Register	0.22	0.25	0.30	ns
t_{CKMPWH}	Clock Minimum Pulse Width High for the Core Register	0.32	0.37	0.43	ns
t_{CKMPWL}	Clock Minimum Pulse Width Low for the Core Register	0.36	0.41	0.48	ns

Note: For specific junction temperature and voltage supply levels, refer to Table 2-6 on page 2-6 for derating values.

Timing Waveforms

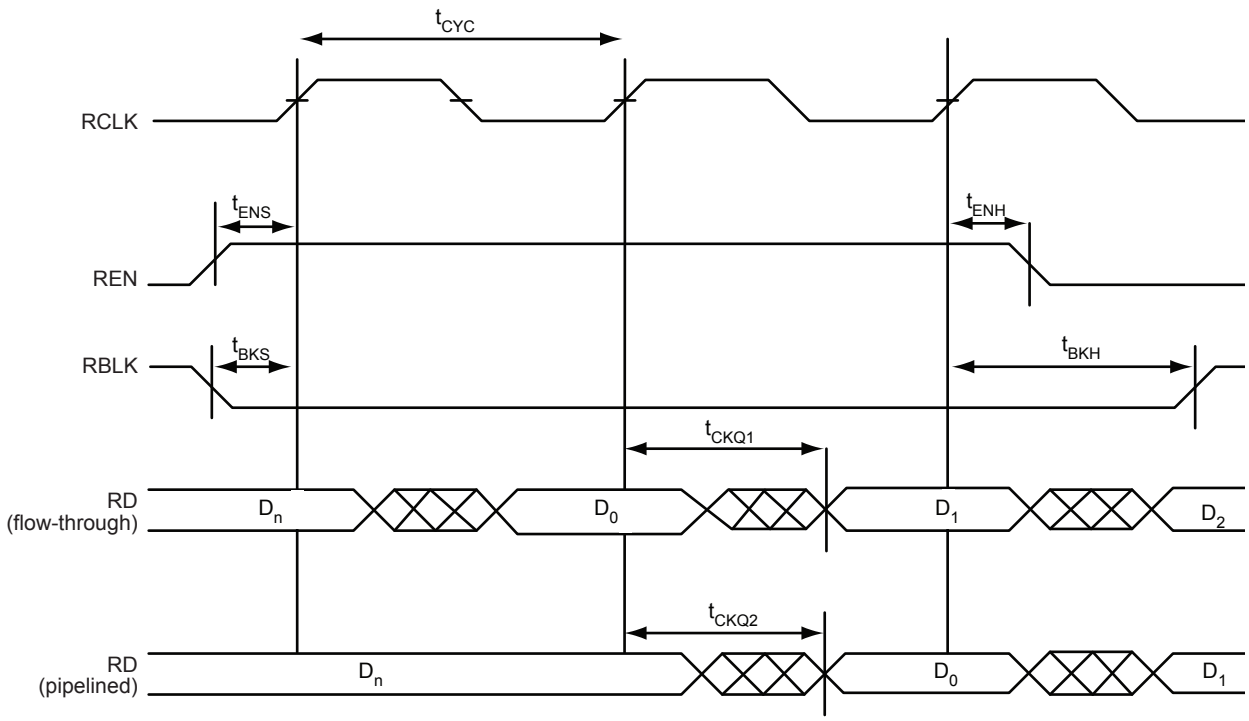

***Figure 2-37* • FIFO Read**

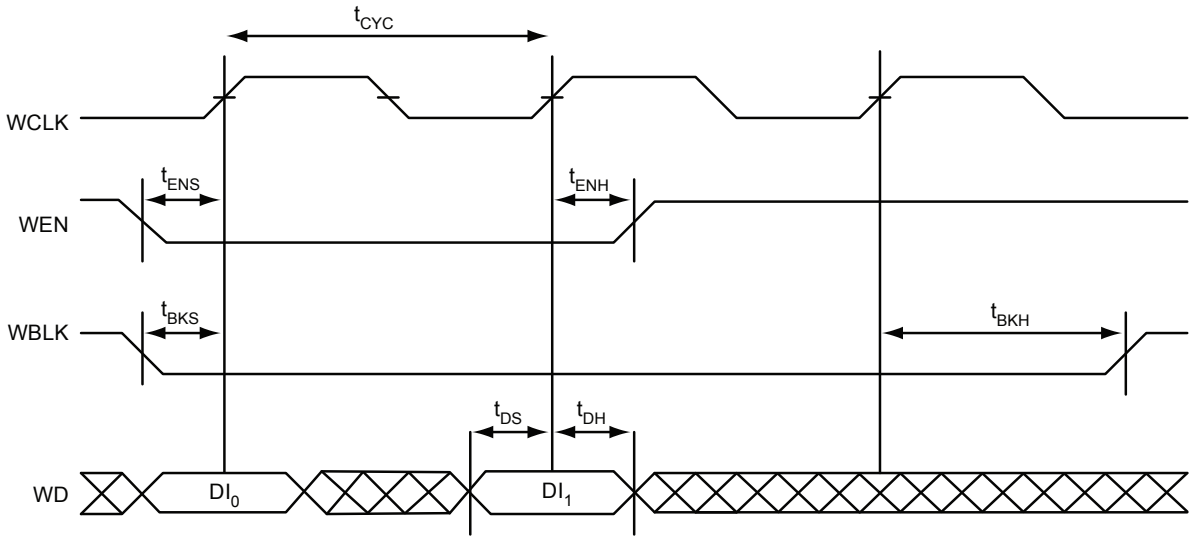

***Figure 2-38* • FIFO Write**

mode is not used in the design, the FF pin is available as a regular I/O. For IGLOOe, ProASIC3EL, and RT ProASIC3 only, the FF pin can be configured as a Schmitt trigger input.

When Flash*Freeze mode is used, the FF pin must not be left floating to avoid accidentally entering Flash*Freeze mode. While in Flash*Freeze mode, the Flash*Freeze pin should be constantly asserted.

The Flash*Freeze pin can be used with any single-ended I/O standard supported by the I/O bank in which the pin is located, and input signal levels compatible with the I/O standard selected. The FF pin should be treated as a sensitive asynchronous signal. When defining pin placement and board layout, simultaneously switching outputs (SSOs) and their effects on sensitive asynchronous pins must be considered.

Unused FF or I/O pins are tristated with weak pull-up. This default configuration applies to both Flash*Freeze mode and normal operation mode. No user intervention is required.

JTAG Pins

Low power flash devices have a separate bank for the dedicated JTAG pins. The JTAG pins can be run at any voltage from 1.5 V to 3.3 V (nominal). VCC must also be powered for the JTAG state machine to operate, even if the device is in bypass mode; VJTAG alone is insufficient. Both VJTAG and VCC to the part must be supplied to allow JTAG signals to transition the device. Isolating the JTAG power supply in a separate I/O bank gives greater flexibility in supply selection and simplifies power supply and PCB design. If the JTAG interface is neither used nor planned for use, the VJTAG pin together with the TRST pin could be tied to GND.

TCK Test Clock

Test clock input for JTAG boundary scan, ISP, and UJTAG. The TCK pin does not have an internal pull-up/-down resistor. If JTAG is not used, Microsemi recommends tying off TCK to GND through a resistor placed close to the FPGA pin. This prevents JTAG operation in case TMS enters an undesired state.

Note that to operate at all VJTAG voltages, 500 Ω to 1 kΩ will satisfy the requirements. Refer to Table 1 for more information.

Table 1 • **Recommended Tie-Off Values for the TCK and TRST Pins**

VJTAG	Tie-Off Resistance
3.3 V	200 Ω –1 kΩ
2.5 V	200 Ω –1 kΩ
1.8 V	500 Ω –1 kΩ
1.5 V	500 Ω –1 kΩ

Notes:

1. *Equivalent parallel resistance if more than one device is on the JTAG chain*
2. *The TCK pin can be pulled up/down.*
3. *The TRST pin is pulled down.*

TDI Test Data Input

Serial input for JTAG boundary scan, ISP, and UJTAG usage. There is an internal weak pull-up resistor on the TDI pin.

TDO Test Data Output

Serial output for JTAG boundary scan, ISP, and UJTAG usage.

TMS Test Mode Select

The TMS pin controls the use of the IEEE 1532 boundary scan pins (TCK, TDI, TDO, TRST). There is an internal weak pull-up resistor on the TMS pin.

TRST Boundary Scan Reset Pin

The TRST pin functions as an active low input to asynchronously initialize (or reset) the boundary scan circuitry. There is an internal weak pull-up resistor on the TRST pin. If JTAG is not used, an external pull-down resistor could be included to ensure the test access port (TAP) is held in reset mode. The resistor values must be chosen from Table 1 and must satisfy the parallel resistance value requirement. The values in Table 1 correspond to the resistor recommended when a single device is used, and the equivalent parallel resistor when multiple devices are connected via a JTAG chain.

QN68	
Pin Number	**A3P015 Function**
1	IO82RSB1
2	IO80RSB1
3	IO78RSB1
4	IO76RSB1
5	GEC0/IO73RSB1
6	GEA0/IO72RSB1
7	GEB0/IO71RSB1
8	VCC
9	GND
10	VCCIB1
11	IO68RSB1
12	IO67RSB1
13	IO66RSB1
14	IO65RSB1
15	IO64RSB1
16	IO63RSB1
17	IO62RSB1
18	IO60RSB1
19	IO58RSB1
20	IO56RSB1
21	IO54RSB1
22	IO52RSB1
23	IO51RSB1
24	VCC
25	GND
26	VCCIB1
27	IO50RSB1
28	IO48RSB1
29	IO46RSB1
30	IO44RSB1
31	IO42RSB1
32	TCK
33	TDI
34	TMS
35	VPUMP
36	TDO

QN68	
Pin Number	**A3P015 Function**
37	TRST
38	VJTAG
39	IO40RSB0
40	IO37RSB0
41	GDB0/IO34RSB0
42	GDA0/IO33RSB0
43	GDC0/IO32RSB0
44	VCCIB0
45	GND
46	VCC
47	IO31RSB0
48	IO29RSB0
49	IO28RSB0
50	IO27RSB0
51	IO25RSB0
52	IO24RSB0
53	IO22RSB0
54	IO21RSB0
55	IO19RSB0
56	IO17RSB0
57	IO15RSB0
58	IO14RSB0
59	VCCIB0
60	GND
61	VCC
62	IO12RSB0
63	IO10RSB0
64	IO08RSB0
65	IO06RSB0
66	IO04RSB0
67	IO02RSB0
68	IO00RSB0

QN132	
Pin Number	**A3P060 Function**
C17	IO57RSB1
C18	NC
C19	TCK
C20	VMV1
C21	VPUMP
C22	VJTAG
C23	VCCIB0
C24	NC
C25	NC
C26	GCA1/IO42RSB0
C27	GCC0/IO39RSB0
C28	VCCIB0
C29	IO29RSB0
C30	GNDQ
C31	GBA1/IO27RSB0
C32	GBB0/IO24RSB0
C33	VCC
C34	IO19RSB0
C35	IO16RSB0
C36	IO13RSB0
C37	GAC1/IO10RSB0
C38	NC
C39	GAA0/IO05RSB0
C40	VMV0
D1	GND
D2	GND
D3	GND
D4	GND

CS121	
Pin Number	A3P060 Function
A1	GNDQ
A2	IO01RSB0
A3	GAA1/IO03RSB0
A4	GAC1/IO07RSB0
A5	IO15RSB0
A6	IO13RSB0
A7	IO17RSB0
A8	GBB1/IO22RSB0
A9	GBA1/IO24RSB0
A10	GNDQ
A11	VMV0
B1	GAA2/IO95RSB1
B2	IO00RSB0
B3	GAA0/IO02RSB0
B4	GAC0/IO06RSB0
B5	IO08RSB0
B6	IO12RSB0
B7	IO16RSB0
B8	GBC1/IO20RSB0
B9	GBB0/IO21RSB0
B10	GBB2/IO27RSB0
B11	GBA2/IO25RSB0
C1	IO89RSB1
C2	GAC2/IO91RSB1
C3	GAB1/IO05RSB0
C4	GAB0/IO04RSB0
C5	IO09RSB0
C6	IO14RSB0
C7	GBA0/IO23RSB0
C8	GBC0/IO19RSB0
C9	IO26RSB0
C10	IO28RSB0
C11	GBC2/IO29RSB0
D1	IO88RSB1
D2	IO90RSB1
D3	GAB2/IO93RSB1

CS121	
Pin Number	A3P060 Function
D4	IO10RSB0
D5	IO11RSB0
D6	IO18RSB0
D7	IO32RSB0
D8	IO31RSB0
D9	GCA2/IO41RSB0
D10	IO30RSB0
D11	IO33RSB0
E1	IO87RSB1
E2	GFC0/IO85RSB1
E3	IO92RSB1
E4	IO94RSB1
E5	VCC
E6	VCCIB0
E7	GND
E8	GCC0/IO36RSB0
E9	IO34RSB0
E10	GCB1/IO37RSB0
E11	GCC1/IO35RSB0
F1	VCOMPLF
F2	GFB0/IO83RSB1
F3	GFA0/IO82RSB1
F4	GFC1/IO86RSB1
F5	VCCIB1
F6	VCC
F7	VCCIB0
F8	GCB2/IO42RSB0
F9	GCC2/IO43RSB0
F10	GCB0/IO38RSB0
F11	GCA1/IO39RSB0
G1	VCCPLF
G2	GFB2/IO79RSB1
G3	GFA1/IO81RSB1
G4	GFB1/IO84RSB1
G5	GND
G6	VCCIB1

CS121	
Pin Number	A3P060 Function
G7	VCC
G8	GDC0/IO46RSB0
G9	GDA1/IO49RSB0
G10	GDB0/IO48RSB0
G11	GCA0/IO40RSB0
H1	IO75RSB1
H2	IO76RSB1
H3	GFC2/IO78RSB1
H4	GFA2/IO80RSB1
H5	IO77RSB1
H6	GEC2/IO66RSB1
H7	IO54RSB1
H8	GDC2/IO53RSB1
H9	VJTAG
H10	TRST
H11	IO44RSB0
J1	GEC1/IO74RSB1
J2	GEC0/IO73RSB1
J3	GEB1/IO72RSB1
J4	GEA0/IO69RSB1
J5	GEB2/IO67RSB1
J6	IO62RSB1
J7	GDA2/IO51RSB1
J8	GDB2/IO52RSB1
J9	TDI
J10	TDO
J11	GDC1/IO45RSB0
K1	GEB0/IO71RSB1
K2	GEA1/IO70RSB1
K3	GEA2/IO68RSB1
K4	IO64RSB1
K5	IO60RSB1
K6	IO59RSB1
K7	IO56RSB1
K8	TCK
K9	TMS

PQ208 – Top View

Note

For more information on package drawings, see *PD3068: Package Mechanical Drawings*.

PQ208	
Pin Number	A3P250 Function
1	GND
2	GAA2/IO118UDB3
3	IO118VDB3
4	GAB2/IO117UDB3
5	IO117VDB3
6	GAC2/IO116UDB3
7	IO116VDB3
8	IO115UDB3
9	IO115VDB3
10	IO114UDB3
11	IO114VDB3
12	IO113PDB3
13	IO113NDB3
14	IO112PDB3
15	IO112NDB3
16	VCC
17	GND
18	VCCIB3
19	IO111PDB3
20	IO111NDB3
21	GFC1/IO110PDB3
22	GFC0/IO110NDB3
23	GFB1/IO109PDB3
24	GFB0/IO109NDB3
25	VCOMPLF
26	GFA0/IO108NPB3
27	VCCPLF
28	GFA1/IO108PPB3
29	GND
30	GFA2/IO107PDB3
31	IO107NDB3
32	GFB2/IO106PDB3
33	IO106NDB3
34	GFC2/IO105PDB3
35	IO105NDB3
36	NC

PQ208	
Pin Number	A3P250 Function
37	IO104PDB3
38	IO104NDB3
39	IO103PSB3
40	VCCIB3
41	GND
42	IO101PDB3
43	IO101NDB3
44	GEC1/IO100PDB3
45	GEC0/IO100NDB3
46	GEB1/IO99PDB3
47	GEB0/IO99NDB3
48	GEA1/IO98PDB3
49	GEA0/IO98NDB3
50	VMV3
51	GNDQ
52	GND
53	NC
54	NC
55	GEA2/IO97RSB2
56	GEB2/IO96RSB2
57	GEC2/IO95RSB2
58	IO94RSB2
59	IO93RSB2
60	IO92RSB2
61	IO91RSB2
62	VCCIB2
63	IO90RSB2
64	IO89RSB2
65	GND
66	IO88RSB2
67	IO87RSB2
68	IO86RSB2
69	IO85RSB2
70	IO84RSB2
71	VCC
72	VCCIB2

PQ208	
Pin Number	A3P250 Function
73	IO83RSB2
74	IO82RSB2
75	IO81RSB2
76	IO80RSB2
77	IO79RSB2
78	IO78RSB2
79	IO77RSB2
80	IO76RSB2
81	GND
82	IO75RSB2
83	IO74RSB2
84	IO73RSB2
85	IO72RSB2
86	IO71RSB2
87	IO70RSB2
88	VCC
89	VCCIB2
90	IO69RSB2
91	IO68RSB2
92	IO67RSB2
93	IO66RSB2
94	IO65RSB2
95	IO64RSB2
96	GDC2/IO63RSB2
97	GND
98	GDB2/IO62RSB2
99	GDA2/IO61RSB2
100	GNDQ
101	TCK
102	TDI
103	TMS
104	VMV2
105	GND
106	VPUMP
107	NC
108	TDO

FG256	
Pin Number	A3P600 Function
G13	GCC1/IO69PPB1
G14	IO65NPB1
G15	IO75PDB1
G16	IO75NDB1
H1	GFB0/IO163NPB3
H2	GFA0/IO162NDB3
H3	GFB1/IO163PPB3
H4	VCOMPLF
H5	GFC0/IO164NPB3
H6	VCC
H7	GND
H8	GND
H9	GND
H10	GND
H11	VCC
H12	GCC0/IO69NPB1
H13	GCB1/IO70PPB1
H14	GCA0/IO71NPB1
H15	IO67NPB1
H16	GCB0/IO70NPB1
J1	GFA2/IO161PPB3
J2	GFA1/IO162PDB3
J3	VCCPLF
J4	IO160NDB3
J5	GFB2/IO160PDB3
J6	VCC
J7	GND
J8	GND
J9	GND
J10	GND
J11	VCC
J12	GCB2/IO73PPB1
J13	GCA1/IO71PPB1
J14	GCC2/IO74PPB1
J15	IO80PPB1
J16	GCA2/IO72PDB1

FG256	
Pin Number	A3P600 Function
K1	GFC2/IO159PDB3
K2	IO161NPB3
K3	IO156PPB3
K4	IO129RSB2
K5	VCCIB3
K6	VCC
K7	GND
K8	GND
K9	GND
K10	GND
K11	VCC
K12	VCCIB1
K13	IO73NPB1
K14	IO80NPB1
K15	IO74NPB1
K16	IO72NDB1
L1	IO159NDB3
L2	IO156NPB3
L3	IO151PPB3
L4	IO158PSB3
L5	VCCIB3
L6	GND
L7	VCC
L8	VCC
L9	VCC
L10	VCC
L11	GND
L12	VCCIB1
L13	GDB0/IO87NPB1
L14	IO85NDB1
L15	IO85PDB1
L16	IO84PDB1
M1	IO150PDB3
M2	IO151NPB3
M3	IO147NPB3
M4	GEC0/IO146NPB3

FG256	
Pin Number	A3P600 Function
M5	VMV3
M6	VCCIB2
M7	VCCIB2
M8	IO117RSB2
M9	IO110RSB2
M10	VCCIB2
M11	VCCIB2
M12	VMV2
M13	IO94RSB2
M14	GDB1/IO87PPB1
M15	GDC1/IO86PDB1
M16	IO84NDB1
N1	IO150NDB3
N2	IO147PPB3
N3	GEC1/IO146PPB3
N4	IO140RSB2
N5	GNDQ
N6	GEA2/IO143RSB2
N7	IO126RSB2
N8	IO120RSB2
N9	IO108RSB2
N10	IO103RSB2
N11	IO99RSB2
N12	GNDQ
N13	IO92RSB2
N14	VJTAG
N15	GDC0/IO86NDB1
N16	GDA1/IO88PDB1
P1	GEB1/IO145PDB3
P2	GEB0/IO145NDB3
P3	VMV2
P4	IO138RSB2
P5	IO136RSB2
P6	IO131RSB2
P7	IO124RSB2
P8	IO119RSB2

FG484	
Pin Number	A3P400 Function
A1	GND
A2	GND
A3	VCCIB0
A4	NC
A5	NC
A6	IO15RSB0
A7	IO18RSB0
A8	NC
A9	NC
A10	IO23RSB0
A11	IO29RSB0
A12	IO35RSB0
A13	IO36RSB0
A14	NC
A15	NC
A16	IO50RSB0
A17	IO51RSB0
A18	NC
A19	NC
A20	VCCIB0
A21	GND
A22	GND
B1	GND
B2	VCCIB3
B3	NC
B4	NC
B5	NC
B6	NC
B7	NC
B8	NC
B9	NC
B10	NC
B11	NC
B12	NC
B13	NC
B14	NC

FG484	
Pin Number	A3P400 Function
B15	NC
B16	NC
B17	NC
B18	NC
B19	NC
B20	NC
B21	VCCIB1
B22	GND
C1	VCCIB3
C2	NC
C3	NC
C4	NC
C5	GND
C6	NC
C7	NC
C8	VCC
C9	VCC
C10	NC
C11	NC
C12	NC
C13	NC
C14	VCC
C15	VCC
C16	NC
C17	NC
C18	GND
C19	NC
C20	NC
C21	NC
C22	VCCIB1
D1	NC
D2	NC
D3	NC
D4	GND
D5	GAA0/IO00RSB0
D6	GAA1/IO01RSB0

FG484	
Pin Number	A3P400 Function
D7	GAB0/IO02RSB0
D8	IO16RSB0
D9	IO17RSB0
D10	IO22RSB0
D11	IO28RSB0
D12	IO34RSB0
D13	IO37RSB0
D14	IO41RSB0
D15	IO43RSB0
D16	GBB1/IO57RSB0
D17	GBA0/IO58RSB0
D18	GBA1/IO59RSB0
D19	GND
D20	NC
D21	NC
D22	NC
E1	NC
E2	NC
E3	GND
E4	GAB2/IO154UDB3
E5	GAA2/IO155UDB3
E6	IO12RSB0
E7	GAB1/IO03RSB0
E8	IO13RSB0
E9	IO14RSB0
E10	IO21RSB0
E11	IO27RSB0
E12	IO32RSB0
E13	IO38RSB0
E14	IO42RSB0
E15	GBC1/IO55RSB0
E16	GBB0/IO56RSB0
E17	IO44RSB0
E18	GBA2/IO60PDB1
E19	IO60NDB1
E20	GND