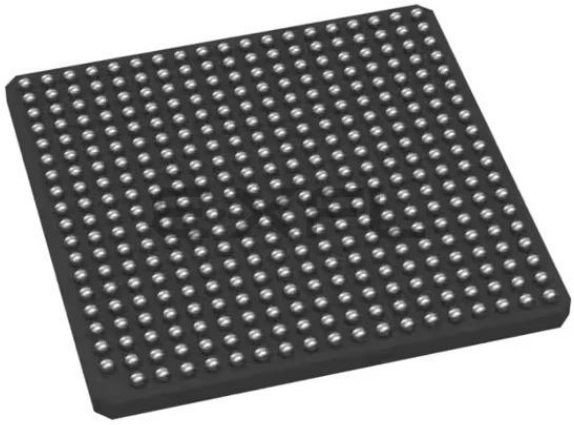

Welcome to E-XFL.COM

Understanding Embedded - Microprocessors

Embedded microprocessors are specialized computing chips designed to perform specific tasks within an embedded system. Unlike general-purpose microprocessors found in personal computers, embedded microprocessors are tailored for dedicated functions within larger systems, offering optimized performance, efficiency, and reliability. These microprocessors are integral to the operation of countless electronic devices, providing the computational power necessary for controlling processes, handling data, and managing communications.

Applications of Embedded - Microprocessors

Embedded microprocessors are utilized across a broad spectrum of applications, making them indispensable in

Details	
Product Status	Obsolete
Core Processor	PowerPC G4
Number of Cores/Bus Width	1 Core, 32-Bit
Speed	1.267GHz
Co-Processors/DSP	Multimedia; SIMD
RAM Controllers	-
Graphics Acceleration	No
Display & Interface Controllers	-
Ethernet	-
SATA	-
USB	-
Voltage - I/O	1.5V, 1.8V, 2.5V
Operating Temperature	0°C ~ 105°C (TA)
Security Features	-
Package / Case	360-CLGA, FCCLGA
Supplier Device Package	360-FCCLGA (25x25)
Purchase URL	https://www.e-xfl.com/product-detail/nxp-semiconductors/mc7448vs1267nc

  - Four vector units and 32-entry vector register file (VRs)
    - Vector permute unit (VPU)
    - Vector integer unit 1 (VIU1) handles short-latency AltiVec™ integer instructions, such as vector add instructions (for example, **vaddsbs**, **vaddshs**, and **vaddsws**).
    - Vector integer unit 2 (VIU2) handles longer-latency AltiVec integer instructions, such as vector multiply add instructions (for example, **vmhaddshs**, **vmhraddshs**, and **vmladduhm**).
    - Vector floating-point unit (VFPU)
  - Three-stage load/store unit (LSU)
    - Supports integer, floating-point, and vector instruction load/store traffic
    - Four-entry vector touch queue (VTQ) supports all four architected AltiVec data stream operations
    - Three-cycle GPR and AltiVec load latency (byte, half word, word, vector) with one-cycle throughput
    - Four-cycle FPR load latency (single, double) with one-cycle throughput
    - No additional delay for misaligned access within double-word boundary
    - A dedicated adder calculates effective addresses (EAs).
    - Supports store gathering
    - Performs alignment, normalization, and precision conversion for floating-point data
    - Executes cache control and TLB instructions
    - Performs alignment, zero padding, and sign extension for integer data
    - Supports hits under misses (multiple outstanding misses)
    - Supports both big- and little-endian modes, including misaligned little-endian accesses
- Three issue queues, FIQ, VIQ, and GIQ, can accept as many as one, two, and three instructions, respectively, in a cycle. Instruction dispatch requires the following:
  - Instructions can only be dispatched from the three lowest IQ entries—IQ0, IQ1, and IQ2.
  - A maximum of three instructions can be dispatched to the issue queues per clock cycle.
  - Space must be available in the CQ for an instruction to dispatch (this includes instructions that are assigned a space in the CQ but not in an issue queue).
- Rename buffers
  - 16 GPR rename buffers
  - 16 FPR rename buffers
  - 16 VR rename buffers
- Dispatch unit
  - Decode/dispatch stage fully decodes each instruction
- Completion unit
  - Retires an instruction from the 16-entry completion queue (CQ) when all instructions ahead of it have been completed, the instruction has finished executing, and no exceptions are pending
  - Guarantees sequential programming model (precise exception model)

  - Monitors all dispatched instructions and retires them in order
  - Tracks unresolved branches and flushes instructions after a mispredicted branch
  - Retires as many as three instructions per clock cycle
- Separate on-chip L1 instruction and data caches (Harvard architecture)
  - 32-Kbyte, eight-way set-associative instruction and data caches
  - Pseudo least-recently-used (PLRU) replacement algorithm
  - 32-byte (eight-word) L1 cache block
  - Physically indexed/physical tags
  - Cache write-back or write-through operation programmable on a per-page or per-block basis
  - Instruction cache can provide four instructions per clock cycle; data cache can provide four words per clock cycle
  - Caches can be disabled in software.
  - Caches can be locked in software.
  - MESI data cache coherency maintained in hardware
  - Separate copy of data cache tags for efficient snooping
  - Parity support on cache
  - No snooping of instruction cache except for **icbi** instruction
  - Data cache supports AltiVec LRU and transient instructions
  - Critical double- and/or quad-word forwarding is performed as needed. Critical quad-word forwarding is used for AltiVec loads and instruction fetches. Other accesses use critical double-word forwarding.
- Level 2 (L2) cache interface
  - On-chip, 1-Mbyte, eight-way set-associative unified instruction and data cache
  - Cache write-back or write-through operation programmable on a per-page or per-block basis
  - Parity support on cache tags
  - ECC or parity support on data
  - Error injection allows testing of error recovery software
- Separate memory management units (MMUs) for instructions and data
  - 52-bit virtual address, 32- or 36-bit physical address
  - Address translation for 4-Kbyte pages, variable-sized blocks, and 256-Mbyte segments
  - Memory programmable as write-back/write-through, caching-inhibited/caching-allowed, and memory coherency enforced/memory coherency not enforced on a page or block basis
  - Separate IBATs and DBATs (eight each) also defined as SPRs
  - Separate instruction and data translation lookaside buffers (TLBs)
    - Both TLBs are 128-entry, two-way set-associative and use an LRU replacement algorithm.
    - TLBs are hardware- or software-reloadable (that is, a page table search is performed in hardware or by system software on a TLB miss).

Table 1. Microarchitecture Comparison (continued)

Microarchitectural Specs	MPC7448	MPC7447A	MPC7447	MPC7445	MPC7441
Execution Unit Timings (Latency-Throughput)					
Aligned load (integer, float, vector)	3-1, 4-1, 3-1				
Misaligned load (integer, float, vector)	4-2, 5-2, 4-2				
L1 miss, L2 hit latency with ECC (data/instruction)	12/16	—			
L1 miss, L2 hit latency without ECC (data/instruction)	11/15	9/13			
SFX (add, sub, shift, rot, cmp, logicals)	1-1				
Integer multiply (32 × 8, 32 × 16, 32 × 32)	4-1, 4-1, 5-2				
Scalar float	5-1				
VSFX (vector simple)	1-1				
VCFX (vector complex)	4-1				
VFPU (vector float)	4-1				
VPER (vector permute)	2-1				
MMUs					
TLBs (instruction and data)	128-entry, 2-way				
Tablewalk mechanism	Hardware + software				
Instruction BATs/data BATs	8/8	8/8	8/8	8/8	4/4
L1 I Cache/D Cache Features					
Size	32K/32K				
Associativity	8-way				
Locking granularity	Way				
Parity on I cache	Word				
Parity on D cache	Byte				
Number of D cache misses (load/store)	5/2	5/1			
Data stream touch engines	4 streams				
On-Chip Cache Features					
Cache level	L2				
Size/associativity	1-Mbyte/ 8-way	512-Kbyte/8-way		256-Kbyte/8-way	
Access width	256 bits				
Number of 32-byte sectors/line	2	2			
Parity tag	Byte	Byte			
Parity data	Byte	Byte			
Data ECC	64-bit	—			
Thermal Control					
Dynamic frequency switching divide-by-two mode	Yes	Yes	No	No	No
Dynamic frequency switching divide-by-four mode	Yes	No	No	No	No
Thermal diode	Yes	Yes	No	No	No

4 General Parameters

The following list summarizes the general parameters of the MPC7448:

Technology	90 nm CMOS SOI, nine-layer metal	
Die size	8.0 mm × 7.3 mm	
Transistor count	90 million	
Logic design	Mixed static and dynamic	
Packages	Surface mount 360 ceramic ball grid array (HCTE)	
	Surface mount 360 ceramic land grid array (HCTE)	
	Surface mount 360 ceramic ball grid array with lead-free spheres (HCTE)	
Core power supply	1.30 V	(1700 MHz device)
	1.25 V	(1600 MHz device)
	1.20 V	(1420 MHz device)
	1.15 V	(1000 MHz device)
I/O power supply	1.5 V, 1.8 V, or 2.5 V	

5 Electrical and Thermal Characteristics

This section provides the AC and DC electrical specifications and thermal characteristics for the MPC7448.

5.1 DC Electrical Characteristics

The tables in this section describe the MPC7448 DC electrical characteristics. Table 2 provides the absolute maximum ratings. See Section 9.2, “Power Supply Design and Sequencing,” for power sequencing requirements.

Table 2. Absolute Maximum Ratings [1]

Characteristic		Symbol	Maximum Value	Unit	Notes
Core supply voltage		V_{DD}	–0.3 to 1.4	V	2
PLL supply voltage		AV_{DD}	–0.3 to 1.4	V	2
Processor bus supply voltage	I/O Voltage Mode = 1.5 V	OV_{DD}	–0.3 to 1.8	V	3
	I/O Voltage Mode = 1.8 V		–0.3 to 2.2		3
	I/O Voltage Mode = 2.5 V		–0.3 to 3.0		3
Input voltage	Processor bus	V_{in}	–0.3 to OV_{DD} + 0.3	V	4
	JTAG signals	V_{in}	–0.3 to OV_{DD} + 0.3	V	
Storage temperature range		T_{stg}	– 55 to 150	•C	

Notes:

1. Functional and tested operating conditions are given in Table 4. Absolute maximum ratings are stress ratings only and functional operation at the maximums is not guaranteed. Stresses beyond those listed may affect device reliability or cause permanent damage to the device.
2. See Section 9.2, “Power Supply Design and Sequencing” for power sequencing requirements.
3. Bus must be configured in the corresponding I/O voltage mode; see Table 3.
4. **Caution**: V_{in} must not exceed OV_{DD} by more than 0.3 V at any time including during power-on reset except as allowed by the overshoot specifications. V_{in} may overshoot/undershoot to a voltage and for a maximum duration as shown in Figure 2.

Table 4 provides the recommended operating conditions for the MPC7448 part numbers described by this document; see Section 11.1, “Part Numbers Fully Addressed by This Document,” for more information. See Section 9.2, “Power Supply Design and Sequencing” for power sequencing requirements.

Table 4. Recommended Operating Conditions[1]

Characteristic		Symbol	Recommended Value								Unit	Notes
			1000 MHz		1420 MHz		1600 MHz		1700 MHz			
			Min	Max	Min	Max	Min	Max	Min	Max		
Core supply voltage		V_{DD}	1.15 V ± 50 mV		1.2 V ± 50 mV		1.25 V ± 50 mV		1.3 V +20/ – 50 mV		V	3, 4, 5
PLL supply voltage		AV_{DD}	1.15 V ± 50 mV		1.2 V ± 50 mV		1.25 V ± 50 mV		1.3 V +20/ – 50 mV		V	2, 3, 4
Processor bus supply voltage	I/O Voltage Mode = 1.5 V	OV_{DD}	1.5 V ± 5%		1.5 V ± 5%		1.5 V ± 5%		1.5 V ± 5%		V	4
	I/O Voltage Mode = 1.8 V		1.8 V ± 5%		1.8 V ± 5%		1.8 V ± 5%		1.8 V ± 5%			4
	I/O Voltage Mode = 2.5 V		2.5 V ± 5%		2.5 V ± 5%		2.5 V ± 5%		2.5 V ± 5%			4
Input voltage	Processor bus	V_{in}	GND	OV_{DD}	GND	OV_{DD}	GND	OV_{DD}	GND	OV_{DD}	V	
	JTAG signals	V_{in}	GND	OV_{DD}	GND	OV_{DD}	GND	OV_{DD}	GND	OV_{DD}		
Die-junction temperature		T_j	0	105	0	105	0	105	0	105	•C	6

Notes:

1. These are the recommended and tested operating conditions.
2. This voltage is the input to the filter discussed in Section 9.2.2, “PLL Power Supply Filtering,” and not necessarily the voltage at the AV_{DD} pin, which may be reduced from V_{DD} by the filter.
3. Some early devices supported voltage and frequency derating whereby VDD (and AVDD) could be reduced to reduce power consumption. This feature has been superseded and is no longer supported. See Section 5.3, “Voltage and Frequency Derating,” for more information.
4. **Caution**: Power sequencing requirements must be met; see Section 9.2, “Power Supply Design and Sequencing”.
5. **Caution**: See Section 9.2.3, “Transient Specifications” for information regarding transients on this power supply.
6. For information on extended temperature devices, see Section 11.2, “Part Numbers Not Fully Addressed by This Document.”

when running a typical benchmark at temperatures in a typical system. The Full-Power Mode–Thermal value is intended to represent the sustained power consumption of the device when running a typical code sequence at high temperature and is recommended to be used as the basis for designing a thermal solution; see Section 9.7, "Power and Thermal Management Information" for more information on thermal solutions. The Full-Power Mode–Maximum value is recommended to be used for power supply design because this represents the maximum peak power draw of the device that a power supply must be capable of sourcing without voltage droop. For information on power consumption when dynamic frequency switching is enabled, see Section 9.7.5, "Dynamic Frequency Switching (DFS)."

Table 7. Power Consumption for MPC7448 at Maximum Rated Frequency

	Die Junction Temperature (T_j)	Maximum Processor Core Frequency (Speed Grade, MHz)				Unit	Notes
		1000 MHz	1420 MHz	1600 MHz	1700 MHz		
Full-Power Mode							
Typical	65 •C	15.0	19.0	20.0	21.0	W	1, 2
Thermal	105 •C	18.6	23.3	24.4	25.6	W	1, 5
Maximum	105 •C	21.6	27.1	28.4	29.8	W	1, 3
Nap Mode							
Typical	105 •C	11.1	11.8	13.0	13.0	W	1, 6
Sleep Mode							
Typical	105 •C	10.8	11.4	12.5	12.5	W	1, 6
Deep Sleep Mode (PLL Disabled)							
Typical	105 •C	10.4	11.0	12.0	12.0	W	1, 6

Notes:

1. These values specify the power consumption for the core power supply (V_{DD}) at nominal voltage and apply to all valid processor bus frequencies and configurations. The values do not include I/O supply power (OV_{DD}) or PLL supply power (AV_{DD}). OV_{DD} power is system dependent but is typically < 5% of V_{DD} power. Worst case power consumption for AV_{DD} < 13 mW. Freescale also offers MPC7448 part numbers that meet lower power consumption specifications; for more information on these devices, see Section 11.2, "Part Numbers Not Fully Addressed by This Document."
2. Typical power consumption is an average value measured with the processor operating at its rated maximum processor core frequency (except for Deep Sleep Mode), at nominal recommended V_{DD} (see Table 4) and 65°C while running the Dhrystone 2.1 benchmark and achieving 2.3 Dhrystone MIPs/MHz. This parameter is not 100% tested but periodically sampled.b
3. Maximum power consumption is the average measured with the processor operating at its rated maximum processor core frequency, at nominal V_{DD} and maximum operating junction temperature (see Table 4) while running an entirely cache-resident, contrived sequence of instructions to keep all the execution units maximally busy.
4. Doze mode is not a user-definable state; it is an intermediate state between full-power and either nap or sleep mode. As a result, power consumption for this mode is not tested.
5. Thermal power consumption is an average value measured at the nominal recommended V_{DD} (see Table 4) and 105 °C while running the Dhrystone 2.1 benchmark and achieving 2.3 Dhrystone MIPs/MHz. This parameter is not 100% tested but periodically sampled.
6. Typical power consumption for these modes is measured at the nominal recommended V_{DD} (see Table 4) and 105 °C in the mode described. This parameter is not 100% tested but is periodically sampled.

5.2 AC Electrical Characteristics

This section provides the AC electrical characteristics for the MPC7448. After fabrication, functional parts are sorted by maximum processor core frequency as shown in Section 5.2.1, “Clock AC Specifications,” and tested for conformance to the AC specifications for that frequency. The processor core frequency, determined by the bus (SYSCLK) frequency and the settings of the PLL_CFG[0:5] signals, can be dynamically modified using dynamic frequency switching (DFS). Parts are sold by maximum processor core frequency; see Section 11, “Part Numbering and Marking,” for information on ordering parts. DFS is described in Section 9.7.5, “Dynamic Frequency Switching (DFS).”

5.2.1 Clock AC Specifications

Table 8 provides the clock AC timing specifications as defined in Figure 3 and represents the tested operating frequencies of the devices. The maximum system bus frequency, f_{SYSCLK}, given in Table 8, is considered a practical maximum in a typical single-processor system. This does not exclude multi-processor systems, but these typically require considerably more design effort to achieve the maximum rated bus frequency. The actual maximum SYSCLK frequency for any application of the MPC7448 will be a function of the AC timings of the microprocessor(s), the AC timings for the system controller, bus loading, circuit board topology, trace lengths, and so forth, and may be less than the value given in Table 8.

Figure 4 provides the AC test load for the MPC7448.

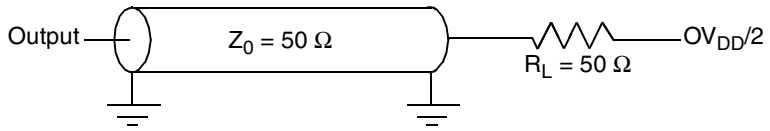

Figure 4. AC Test Load

Figure 5 provides the $\overline{\text{BMODE}}$[0:1] input timing diagram for the MPC7448. These mode select inputs are sampled once before and once after $\overline{\text{HRESET}}$ negation.

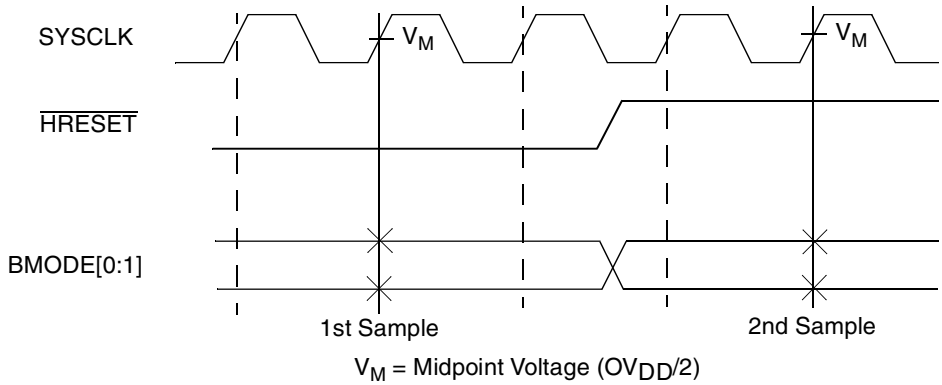

Figure 5. $\overline{\text{BMODE}}$[0:1] Input Sample Timing Diagram

Figure 7 provides the AC test load for TDO and the boundary-scan outputs of the MPC7448.

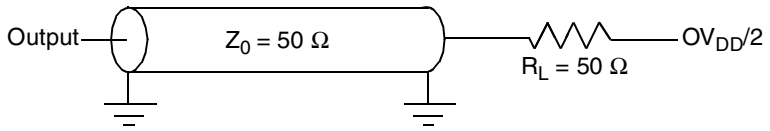

Figure 7. Alternate AC Test Load for the JTAG Interface

Figure 8 provides the JTAG clock input timing diagram.

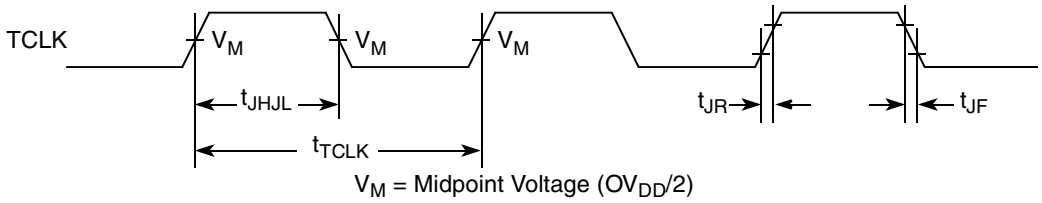

Figure 8. JTAG Clock Input Timing Diagram

Figure 9 provides the $\overline{\text{TRST}}$ timing diagram.

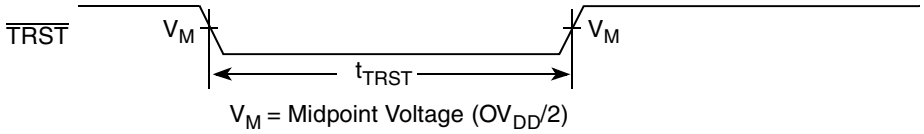

Figure 9. $\overline{\text{TRST}}$ Timing Diagram

Figure 10 provides the boundary-scan timing diagram.

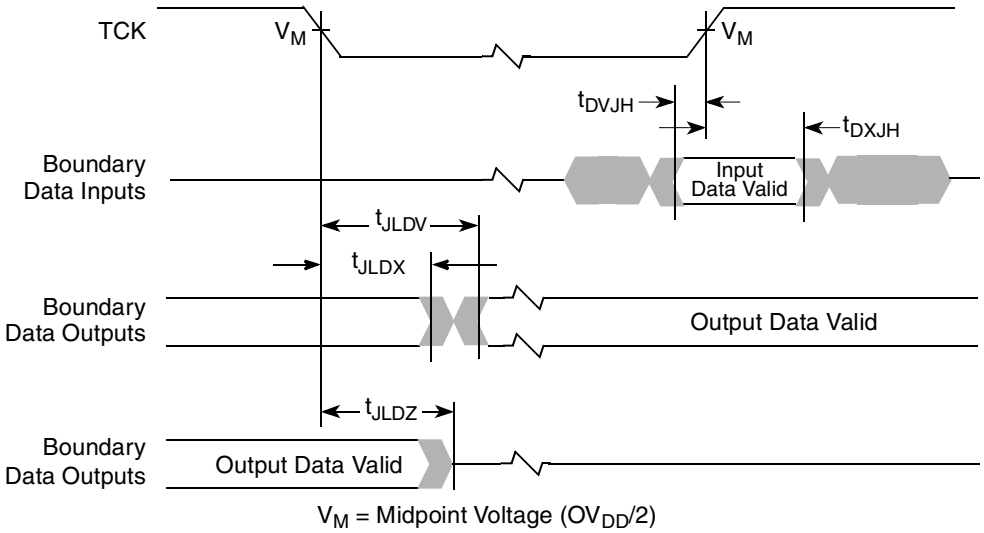

Figure 10. Boundary-Scan Timing Diagram

6 Pin Assignments

Figure 12 (in Part A) shows the pinout of the MPC7448, 360 high coefficient of thermal expansion ceramic ball grid array (HCTE) package as viewed from the top surface. Part B shows the side profile of the HCTE package to indicate the direction of the top surface view.

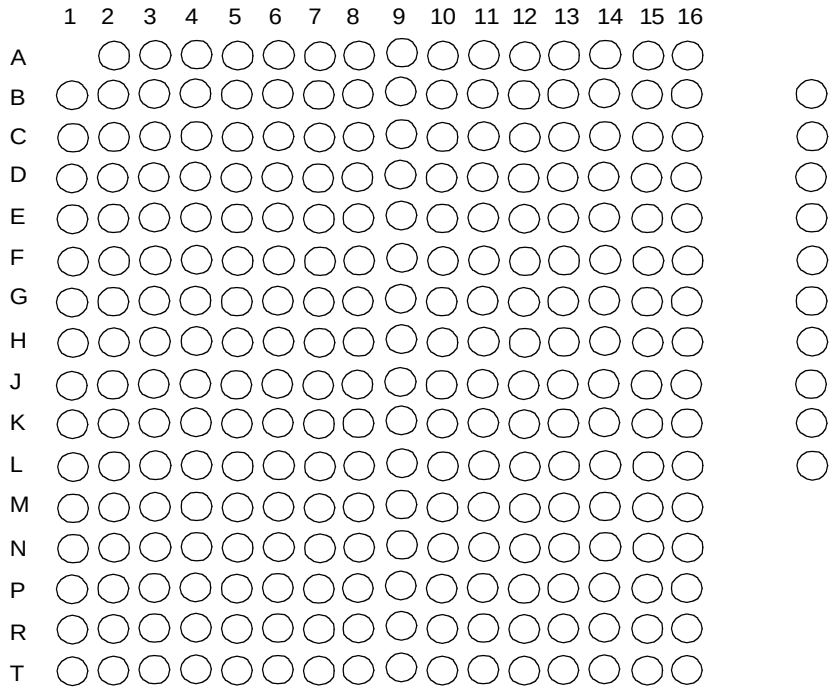

Not to Scale

Figure 12. Pinout of the MPC7448, 360 HCTE Package as Viewed from the Top Surface

9.2.3 Transient Specifications

The ensure the long-term reliability of the device, the MPC7448 requires that transients on the core power rail (V_{DD}) be constrained. The recommended operating voltage specifications provided in Table 4 are DC specifications. That is, the device may be operated continuously with V_{DD} within the specified range without adversely affecting the device's reliability. Excursions above the stated recommended operation range, including overshoot during power-up, can impact the long-term reliability of the device. Excursions are described by their amplitude and duration. Duration is defined as the time period during which the V_{DD} power plane, as measured at the VDD_SENSE pins, will be within a specific voltage range, expressed as percentage of the total time the device will be powered up over the device lifetime. In practice, the period over which transients are measured can be any arbitrary period of time that accurately represents the expected range of processor and system activity. The voltage ranges and durations for normal operation and transients are described in Table 14.

Table 14. VDD Power Supply Transient Specifications

At recommended operating temperatures. See Table 4.

Voltage Region	Voltage Range (V)		Permitted Duration [1]	Notes
	Min	Max		
Normal	V_{DD} minimum	V_{DD} maximum	100%	2
Low Transient	V_{DD} maximum	1.35 V	10%	2, 3
High Transient	1.35 V	1.40 V	0.2%	4

Notes:

1. Permitted duration is defined as the percentage of the total time the device is powered on that the V_{DD} power supply voltage may exist within the specified voltage range.
2. See Table 4 for nominal V_{DD} specifications.
3. To simplify measurement, excursions into the High Transient region are included in this duration.
4. Excursions above the absolute maximum rating of 1.4 V are not permitted; see Table 2.

Note that, to simplify transient measurements, the duration of the excursion into the High Transient region is also included in the Low Transient duration, so that only the time the voltage is above each threshold must be considered. Figure 19 shows an example of measuring voltage transients.

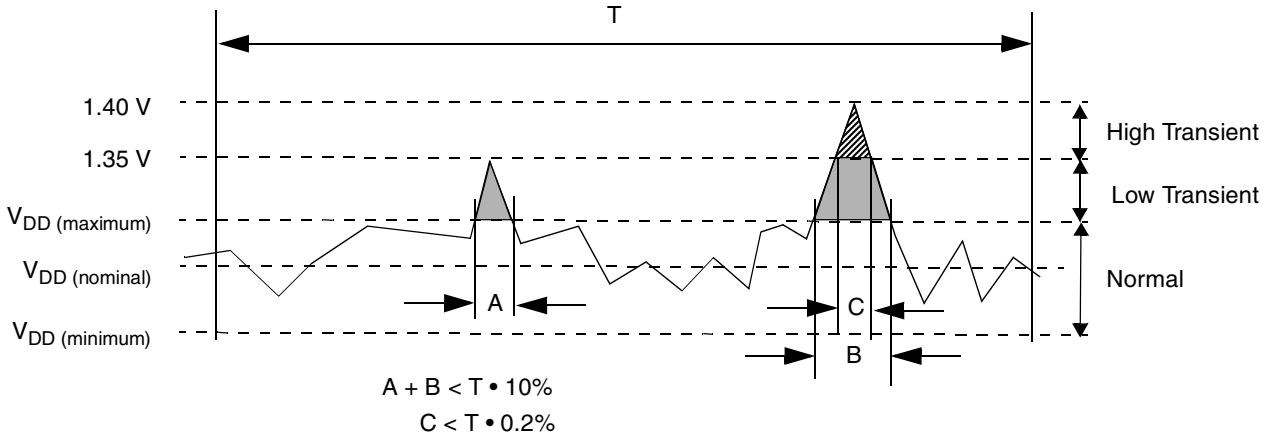

Figure 19. Voltage Transient Example

9.7.1 Internal Package Conduction Resistance

For the exposed-die packaging technology described in Table 5, the intrinsic conduction thermal resistance paths are as follows:

- The die junction-to-case thermal resistance (the case is actually the top of the exposed silicon die)
- The die junction-to-board thermal resistance

Figure 24 depicts the primary heat transfer path for a package with an attached heat sink mounted to a printed-circuit board.

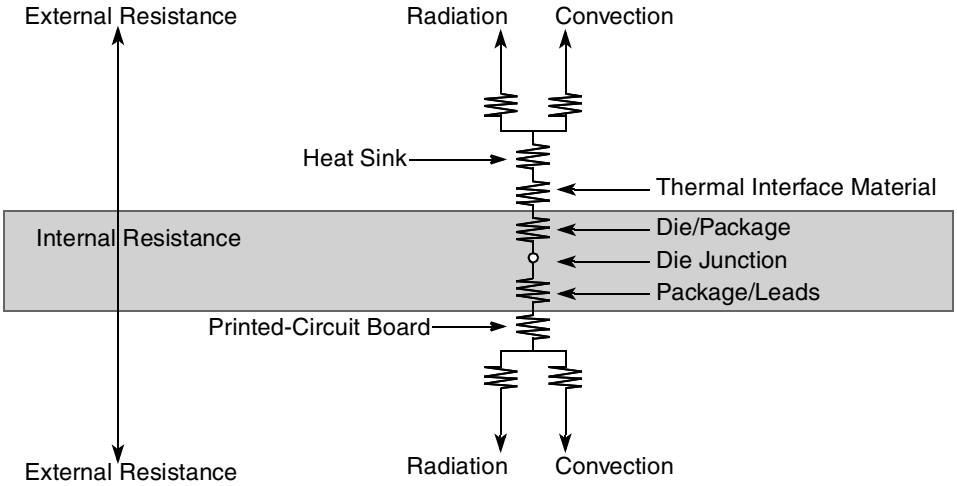

(Note the internal versus external package resistance.)

Figure 24. C4 Package with Heat Sink Mounted to a Printed-Circuit Board

Heat generated on the active side of the chip is conducted through the silicon, through the heat sink attach material (or thermal interface material), and, finally, to the heat sink, where it is removed by forced-air convection.

Because the silicon thermal resistance is quite small, the temperature drop in the silicon may be neglected for a first-order analysis. Thus, the thermal interface material and the heat sink conduction/convective thermal resistances are the dominant terms.

9.7.2 Thermal Interface Materials

A thermal interface material is recommended at the package lid-to-heat sink interface to minimize the thermal contact resistance. For those applications where the heat sink is attached by spring clip mechanism, Figure 25 shows the thermal performance of three thin-sheet thermal-interface materials (silicone, graphite/oil, fluoroether oil), a bare joint, and a joint with thermal grease as a function of contact pressure. As shown, the performance of these thermal interface materials improves with increasing contact pressure. The use of thermal grease significantly reduces the interface thermal resistance. That is, the bare joint results in a thermal resistance approximately seven times greater than the thermal grease joint.

Often, heat sinks are attached to the package by means of a spring clip to holes in the printed-circuit board (see Figure 22). Therefore, synthetic grease offers the best thermal performance due to the low interface pressure and is recommended due to the high power dissipation of the MPC7448. Of course, the selection

Due to the complexity and variety of system-level boundary conditions for today's microelectronic equipment, the combined effects of the heat transfer mechanisms (radiation, convection, and conduction) may vary widely. For these reasons, we recommend using conjugate heat transfer models for the board as well as system-level designs.

For system thermal modeling, the MPC7448 thermal model is shown in Figure 26. Four volumes represent this device. Two of the volumes, solder ball-air and substrate, are modeled using the package outline size of the package. The other two, die and bump-underfill, have the same size as the die. The silicon die should be modeled $8.0 \times 7.3 \times 0.86$ mm^3 with the heat source applied as a uniform source at the bottom of the volume. The bump and underfill layer is modeled as $8.0 \times 7.3 \times 0.07$ mm^{3}collapsed in the z-direction with a thermal conductivity of 5.0 W/(m • K) in the z-direction. The substrate volume is $25 \times 25 \times 1.14$ mm^3 and has 9.9 W/(m • K) isotropic conductivity in the xy-plane and 2.95 W/(m • K) in the direction of the z-axis. The solder ball and air layer are modeled with the same horizontal dimensions as the substrate and is 0.8 mm thick. For the LGA package the solder and air layer is 0.1 mm thick, but the material properties are the same. It can also be modeled as a collapsed volume using orthotropic material properties: 0.034 W/(m • K) in the xy-plane direction and 11.2 W/(m • K) in the direction of the z-axis.

Conductivity	Value	Unit
Die ($8.0 \times 7.3 \times 0.86$ mm^3)		
Silicon	Temperature-dependent	W/(m • K)
Bump and Underfill ($8.0 \times 7.3 \times 0.07$ mm^3)		
k_z	5.0	W/(m • K)
Substrate ($25 \times 25 \times 1.14$ mm^3)		
k_x	9.9	W/(m • K)
k_y	9.9	
k_z	2.95	
Solder Ball and Air ($25 \times 25 \times 0.8$ mm^3)		
k_x	0.034	W/(m • K)
k_y	0.034	
k_z	11.2	

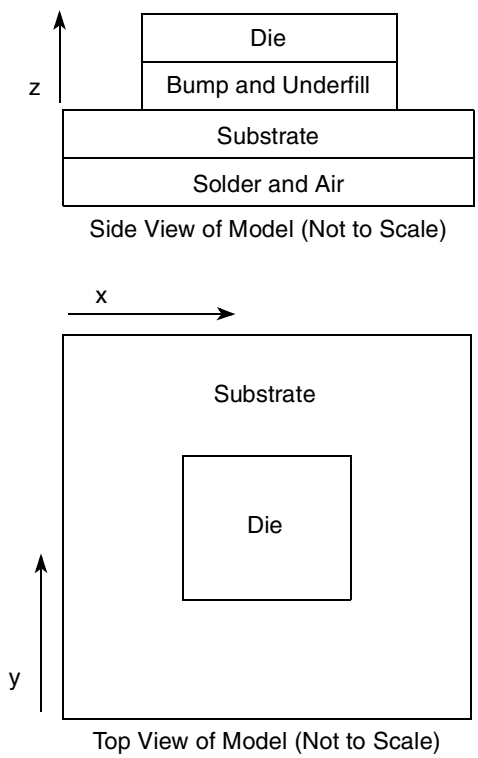

Figure 26. Recommended Thermal Model of MPC7448

9.7.4 Temperature Diode

The MPC7448 has a temperature diode on the microprocessor that can be used in conjunction with other system temperature monitoring devices (such as Analog Devices, ADT7461™). These devices use the negative temperature coefficient of a diode operated at a constant current to determine the temperature of the microprocessor and its environment. For proper operation, the monitoring device used should auto-calibrate the device by canceling out the V_{BE} variation of each MPC7448's internal diode.

The following are the specifications of the MPC7448 on-board temperature diode:

$V_f > 0.40$ V

$V_f < 0.90$ V

Operating range 2–300 µA

Diode leakage < 10 nA @ 125°C

Ideality factor over 5–150 µA at 60°C: n = 1.0275 ± 0.9%

Ideality factor is defined as the deviation from the ideal diode equation:

$$I_{fw} = I_s \left[e^{\frac{qV_f}{nKT}} - 1 \right]$$

Another useful equation is:

$$V_H - V_L = n\frac{KT}{q}\left[\ln \frac{I_H}{I_L} \right] - 1$$

Where:

I_{fw} = Forward current
I_s = Saturation current
V_d = Voltage at diode
V_f = Voltage forward biased
V_H = Diode voltage while I_H is flowing
V_L = Diode voltage while I_L is flowing
I_H = Larger diode bias current
I_L = Smaller diode bias current
q = Charge of electron (1.6×10^{-19} C)
n = Ideality factor (normally 1.0)
K = Boltzman's constant (1.38×10^{-23} Joules/K)
T = Temperature (Kelvins)

The ratio of I_H to I_L is usually selected to be 10:1. The previous equation simplifies to the following:

$$V_H - V_L = 1.986 \times 10^{-4} \times nT$$

Table 16. Valid Divide Ratio Configurations

DFS mode disabled		DFS divide-by-2 mode enabled (HID1[DFS2] = 1 or $\overline{DFS2}$ = 0)		DFS divide-by-4 mode enabled (HID1[DFS4] = 1 or $\overline{DFS4}$ = 0)	
Bus-to-Core Multiplier Configured by PLL_CFG[0:5] (see Table 12)	HID1[PC0-5] [3]	Bus-to-Core Multiplier	HID1[PC0-5] [3]	Bus-to-Core Multiplier	HID1[PC0-5] [3]
2x [4]	010000	N/A (unchanged) [1]	unchanged [1]	N/A (unchanged) [1]	unchanged [1]
3x [4]	100000	N/A (unchanged) [1]	unchanged [1]	N/A (unchanged) [1]	unchanged [1]
4x [4]	101000	2x [4]	010000	N/A (unchanged) [1]	unchanged [1]
5x	101100	2.5x [4]	010101	N/A (unchanged) [1]	unchanged [1]
5.5x	100100	2.75x [4]	110101 [2]	N/A (unchanged) [1]	unchanged [1]
6x	110100	3x [4]	100000	N/A (unchanged) [1]	unchanged [1]
6.5x	010100	3.25x [4]	100000 [2]	N/A (unchanged) [1]	unchanged [1]
7x	001000	3.5x [4]	110101	N/A (unchanged) [1]	unchanged [1]
7.5x	000100	3.75x [4]	110101 [2]	N/A (unchanged) [1]	unchanged [1]
8x	110000	4x [4]	101000 [4]	2x [4]	010000
8.5x	011000	4.25x [4]	101000 [2]	N/A (unchanged) [1]	unchanged [1]
9x	011110	4.5x [4]	011101	2.25x [4]	010000 [2]
9.5x	011100	4.75x [4]	011101 [2]	N/A (unchanged) [1]	unchanged [1]
10x	101010	5x	101100	2.5x [4]	010101
10.5x	100010	5.25x	101100 [2]	N/A (unchanged) [1]	unchanged [1]
11x	100110	5.5x	100100	2.75x [4]	010101 [2]
11.5x	000000	5.75x	100100 [2]	N/A (unchanged) [1]	unchanged [1]
12x	101110	6x	110100	3x [4]	100000
12.5x	111110	6.25x	110100 [2]	N/A (unchanged) [1]	unchanged [1]
13x	010110	6.5x	010100	3.25x [4]	100000 [2]
13.5x	111000	6.75	010100 [2]	N/A (unchanged) [1]	unchanged [1]
14x	110010	7x	001000	3.5x [4]	110101
15x	000110	7.5x	000100	3.75x [4]	110101 [2]
16x	110110	8x	110000	4x [4]	101000
17x	000010	8.5x	011000	4.25x [4]	101000 [2]
18x	001010	9x	011110	4.5x [4]	011101
20x	001110	10x	101010	5x	101100
21x	010010	10.5x	100010	5.25x	101100 [2]