Infineon Technologies - MB91F522FWCPMC-GTE2 Datasheet

Welcome to E-XFL.COM

What is "Embedded - Microcontrollers"?

"Embedded - Microcontrollers" refer to small, integrated circuits designed to perform specific tasks within larger systems. These microcontrollers are essentially compact computers on a single chip, containing a processor core, memory, and programmable input/output peripherals. They are called "embedded" because they are embedded within electronic devices to control various functions, rather than serving as standalone computers. Microcontrollers are crucial in modern electronics, providing the intelligence and control needed for a wide range of applications.

Applications of "Embedded - Microcontrollers"

Details	
Product Status	Obsolete
Core Processor	FR81S
Core Size	32-Bit Single-Core
Speed	80MHz
Connectivity	CANbus, CSIO, I²C, LINbus, SPI, UART/USART
Peripherals	DMA, LVD, POR, PWM, WDT
Number of I/O	76
Program Memory Size	320KB (320K x 8)
Program Memory Type	FLASH
EEPROM Size	64K x 8
RAM Size	56K x 8
Voltage - Supply (Vcc/Vdd)	2.7V ~ 5.5V
Data Converters	A/D 37x12b; D/A 2x8b
Oscillator Type	External
Operating Temperature	-40°C ~ 105°C (TA)
Mounting Type	Surface Mount
Package / Case	100-LQFP
Supplier Device Package	100-LQFP (14x14)
Purchase URL	https://www.e-xfl.com/product-detail/infineon-technologies/mb91f522fwcpmc-gte2

Table for clock supervisor and external low voltage detection reset initial value ON/OFF

Clock	CSV Initial value	LVD Initial value	Function
single	ON	ON	S
		OFF	U
	OFF	ON	H
		OFF	K
Dual	ON	ON	W
		OFF	Y
	OFF	ON	J
		OFF	L

```
MB91F52X□△○
          |||└→Revision:B, C, D, E
          ||└──→Function:See the table for clock supervisor and external
          ||              low voltage detection reset initial value ON/OFF.
          |└───→PKG Type:B 64pin
          |               D 80 pin
          |               F 100 pin
          |               J 120 pin
          |               K 144 pin
          |               L 176 pin
          └────→Memory Size:2 256KB
                            3 384KB
                            4 512KB
                            5 768KB
                            6 1MB
```

■ Storage of Semiconductor Devices

Because plastic chip packages are formed from plastic resins, exposure to natural environmental conditions will cause absorption of moisture. During mounting, the application of heat to a package that has absorbed moisture can cause surfaces to peel, reducing moisture resistance and causing packages to crack. To prevent, do the following:

(1) Avoid exposure to rapid temperature changes, which cause moisture to condense inside the product. Store products in locations where temperature changes are slight.

(2) Use dry boxes for product storage. Products should be stored below 70% relative humidity, and at temperatures between 5°C and 30°C.
When you open Dry Package that recommends humidity 40% to 70% relative humidity.

(3) When necessary, Cypress packages semiconductor devices in highly moisture-resistant aluminum laminate bags, with a silica gel desiccant. Devices should be sealed in their aluminum laminate bags for storage.

(4) Avoid storing packages where they are exposed to corrosive gases or high levels of dust.

■ Baking

Packages that have absorbed moisture may be de-moisturized by baking (heat drying). Follow the Cypress recommended conditions for baking.

Condition: 125°C/24 h

■ Static Electricity

Because semiconductor devices are particularly susceptible to damage by static electricity, you must take the following precautions:

(1) Maintain relative humidity in the working environment between 40% and 70%. Use of an apparatus for ion generation may be needed to remove electricity.

(2) Electrically ground all conveyors, solder vessels, soldering irons and peripheral equipment.

(3) Eliminate static body electricity by the use of rings or bracelets connected to ground through high resistance (on the level of 1 MΩ).
Wearing of conductive clothing and shoes, use of conductive floor mats and other measures to minimize shock loads is recommended.

(4) Ground all fixtures and instruments, or protect with anti-static measures.

(5) Avoid the use of styrofoam or other highly static-prone materials for storage of completed board assemblies.

3. Precautions for Use Environment

Reliability of semiconductor devices depends on ambient temperature and other conditions as described above.

For reliable performance, do the following:

(1) Humidity

Prolonged use in high humidity can lead to leakage in devices as well as printed circuit boards. If high humidity levels are anticipated, consider anti-humidity processing.

(2) Discharge of Static Electricity

When high-voltage charges exist close to semiconductor devices, discharges can cause abnormal operation. In such cases, use anti-static measures or processing to prevent discharges.

(3) Corrosive Gases, Dust, or Oil

Exposure to corrosive gases or contact with dust or oil may lead to chemical reactions that will adversely affect the device. If you use devices in such conditions, consider ways to prevent such exposure or to protect the devices.

(4) Radiation, Including Cosmic Radiation

Most devices are not designed for environments involving exposure to radiation or cosmic radiation. Users should provide shielding as appropriate.

MB91F522D, MB91F523D, MB91F524D, MB91F525D, MB91F526D

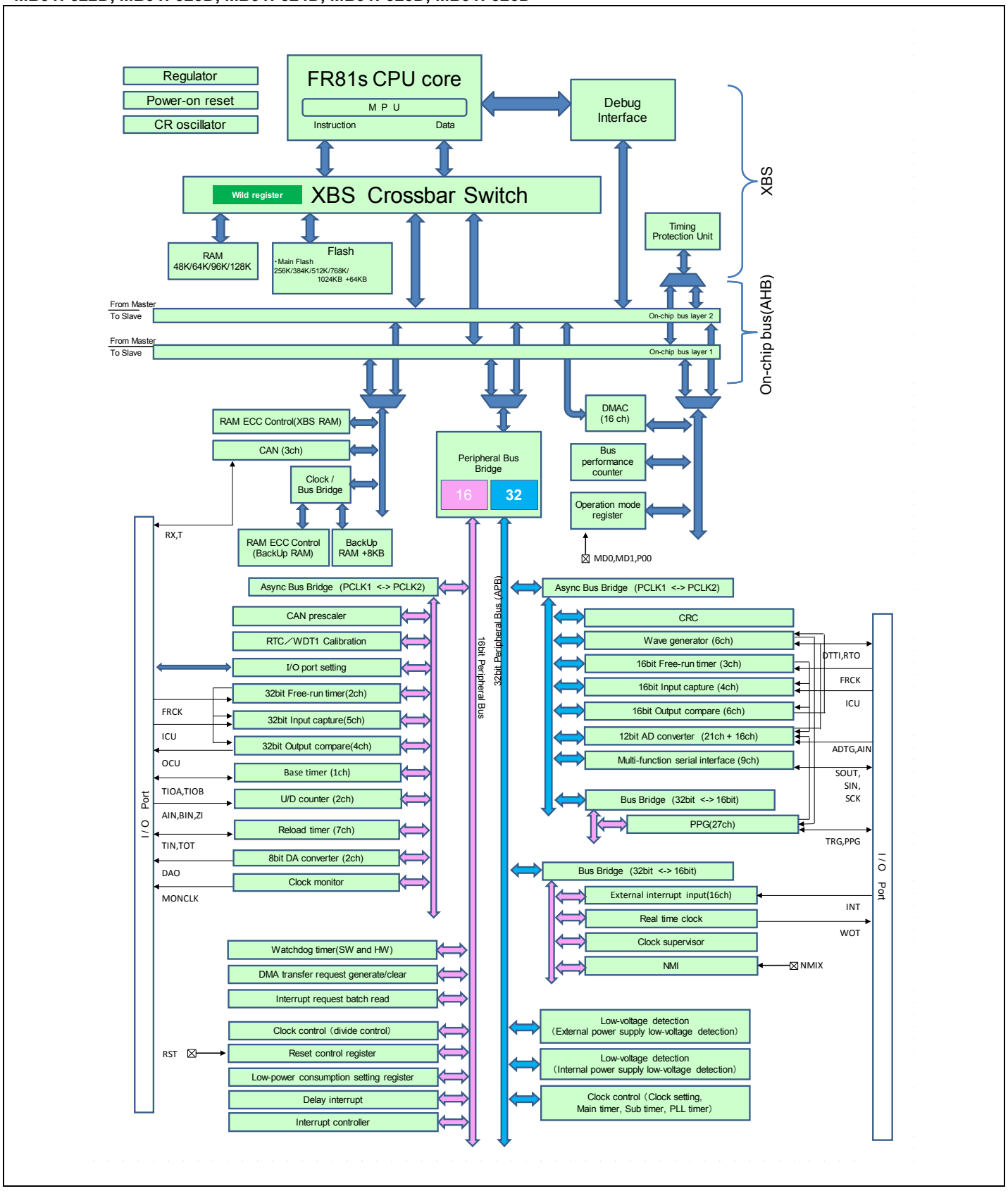

MB91F522F, MB91F523F, MB91F524F, MB91F525F, MB91F526F

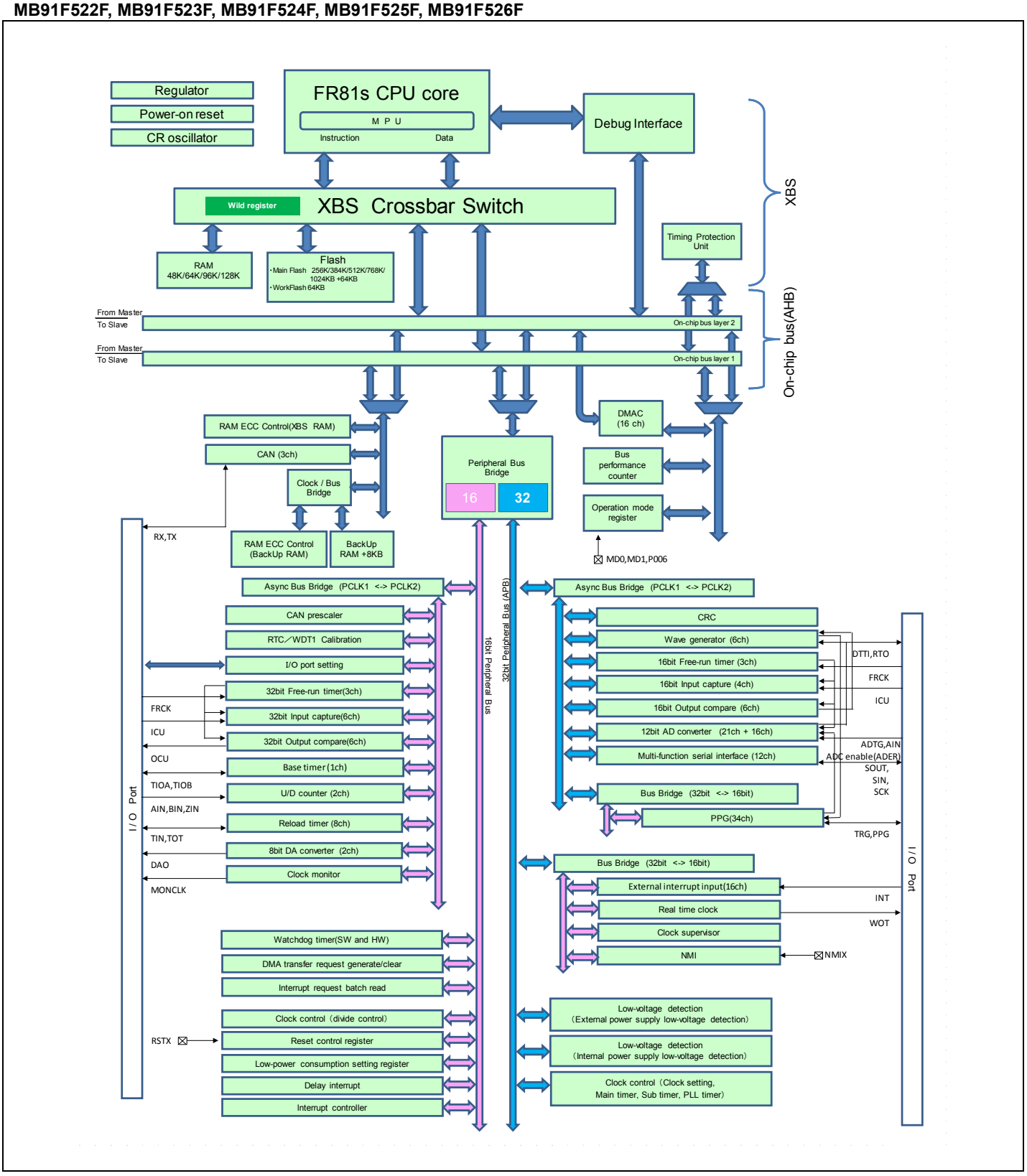

MB91F522J, MB91F523J, MB91F524J, MB91F525J, MB91F526J

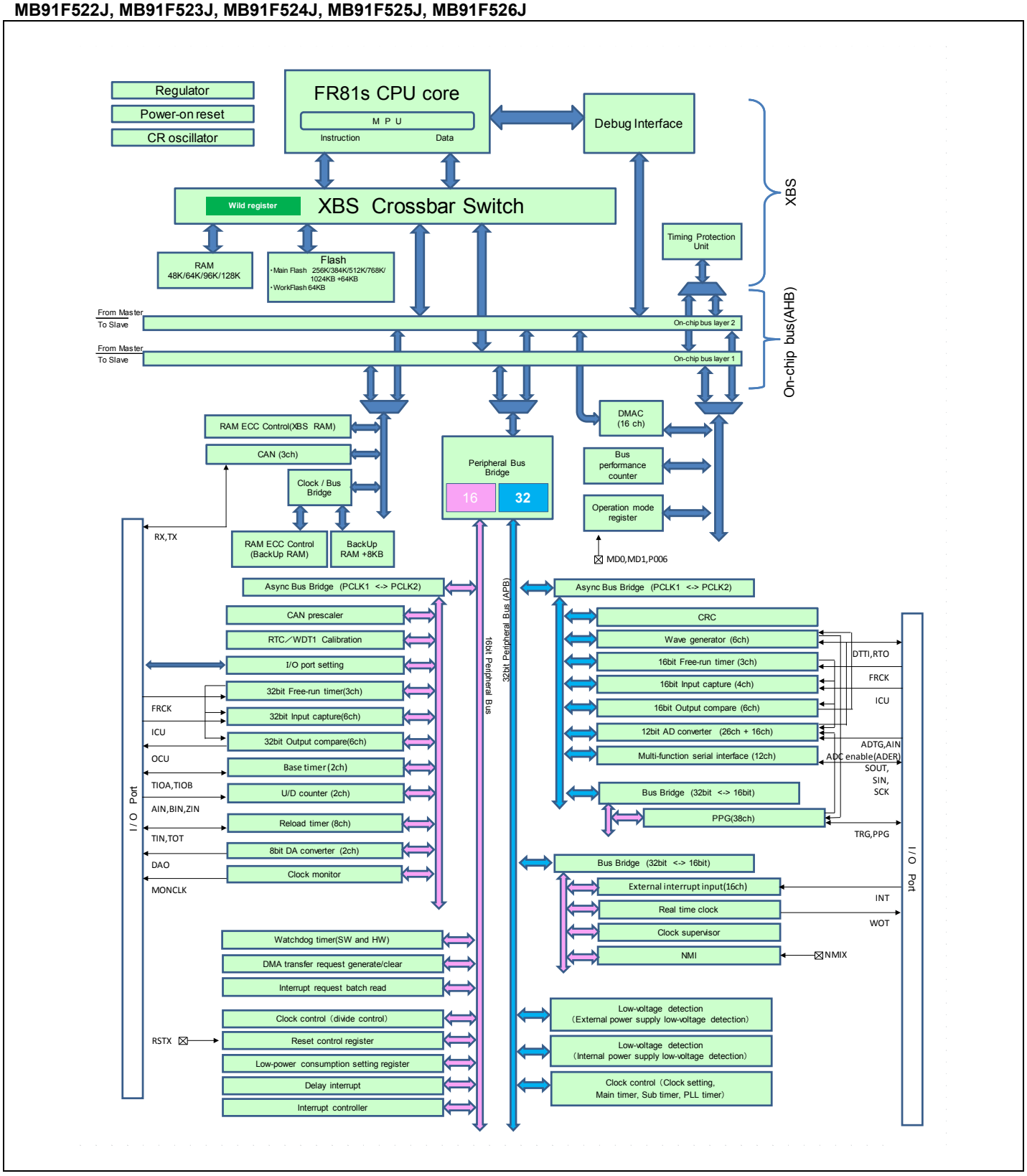

Address	Address offset value / Register name				Block
	+0	+1	+2	+3	
000120_H	OCCP6 [R/W] W 00000000 00000000 00000000 00000000				Output Compare 6,7 32-bit OCU
000124_H	OCCP7 [R/W] W 00000000 00000000 00000000 00000000				
000128_H	—	—	OCSH67 [R/W] B,H,W ---0--00	OCSL67 [R/W] B,H,W 0000--00	
$00012C_H$	OCCP8 [R/W] W 00000000 00000000 00000000 00000000				Output Compare 8,9 32-bit OCU
000130_H	OCCP9 [R/W] W 00000000 00000000 00000000 00000000				
000134_H	—	—	OCSH89 [R/W] B,H,W ---0--00	OCSL89 [R/W] B,H,W 0000--00	
000138_H to $0001B4_H$	—	—	—	—	Reserved
$0001B8_H$	EPFR64 [R/W] B,H,W -----00-	EPFR65 [R/W] B,H,W 0000-000	EPFR66 [R/W] B,H,W --000000	EPFR67 [R/W] B,H,W ----0000	Extended port function register
$0001BC_H$	EPFR68 [R/W] B,H,W ----0000	EPFR69 [R/W] B,H,W ----0000	EPFR70 [R/W] B,H,W ---00000	EPFR71 [R/W] B,H,W -0-0-0-0	
$0001C0_H$	EPFR72 [R/W] B,H,W 000000-0	EPFR73 [R/W] B,H,W 00000000	EPFR74 [R/W] B,H,W 00000000	EPFR75 [R/W] B,H,W 00000000	
$0001C4_H$	EPFR76 [R/W] B,H,W 00000000	EPFR77 [R/W] B,H,W --000000	EPFR78 [R/W] B,H,W ------00	EPFR79 [R/W] B,H,W 00000000	
$0001C8_H$	EPFR80 [R/W] B,H,W ---00000	EPFR81 [R/W] B,H,W 00000000	EPFR82 [R/W] B,H,W 00000000	EPFR83 [R/W] B,H,W -0000000	
$0001CC_H$	EPFR84 [R/W] B,H,W 00000000	EPFR85 [R/W] B,H,W --000000	EPFR86 [R/W] B,H,W ---00000	EPFR87 [R/W] B,H,W ------00	
$0001D0_H$	EPFR88 [R/W] B,H,W -------0	—	—	—	
$0001D4_H$	—	—	—	—	Reserved
$0001D8_H$	TMRLRA4 [R/W] H XXXXXXXX XXXXXXXX		TMR4 [R] H XXXXXXXX XXXXXXXX		Reload Timer 4
$0001DC_H$	TMRLRB4 [R/W] H XXXXXXXX XXXXXXXX		TMCSR4 [R/W] B, H,W 00000000 0-000000		
$0001E0_H$ to $0001EC_H$	—	—	—	—	Reserved
$0001F0_H$	TMRLRA5 [R/W] H XXXXXXXX XXXXXXXX		TMR5 [R] H XXXXXXXX XXXXXXXX		Reload Timer 5
$0001F4_H$	TMRLRB5 [R/W] H XXXXXXXX XXXXXXXX		TMCSR5 [R/W] B, H,W 00000000 0-000000		

Address	Address offset value / Register name				Block
	+0	+1	+2	+3	
000328_H	DEAR [R] W XXXXXXXX XXXXXXXX XXXXXXXX XXXXXXXX				MPU [S] (Only CPU core can access this area)
$00032C_H$	—	—	DESR [R/W] H -------- 00000--0		
000330_H	PABR0 [R/W] W XXXXXXXX XXXXXXXX XXXXXXXX XXXX0000				
000334_H	—	—	PACR0 [R/W] H 000000-0 00000--0		
000338_H	PABR1 [R/W] W XXXXXXXX XXXXXXXX XXXXXXXX XXXX0000				
$00033C_H$	—	—	PACR1 [R/W] H 000000-0 00000--0		
000340_H	PABR2 [R/W] W XXXXXXXX XXXXXXXX XXXXXXXX XXXX0000				MPU [S] (Only CPU core can access this area)
000344_H	—	—	PACR2 [R/W] H 000000-0 00000--0		
000348_H	PABR3 [R/W] W XXXXXXXX XXXXXXXX XXXXXXXX XXXX0000				
$00034C_H$	—	—	PACR3 [R/W] H 000000-0 00000--0		
000350_H	PABR4 [R/W] W XXXXXXXX XXXXXXXX XXXXXXXX XXXX0000				
000354_H	—	—	PACR4 [R/W] H 000000-0 00000--0		
000358_H	PABR5 [R/W] W XXXXXXXX XXXXXXXX XXXXXXXX XXXX0000				
$00035C_H$	—	—	PACR5 [R/W] H 000000-0 00000--0		
000360_H	PABR6 [R/W] W XXXXXXXX XXXXXXXX XXXXXXXX XXXX0000				
000364_H	—	—	PACR6 [R/W] H 000000-0 00000--0		
000368_H	PABR7 [R/W] W XXXXXXXX XXXXXXXX XXXXXXXX XXXX0000				
$00036C_H$	—	—	PACR7 [R/W] H 000000-0 00000--0		
000370_H to $0003AC_H$	—				Reserved [S]
$0003B0_H$ to $0003FC_H$	—	—	—	—	Reserved [S]

Address	Address offset value / Register name				Block
	+0	+1	+2	+3	
000440_H	ICR00 [R/W] B,H,W ---11111	ICR01 [R/W] B,H,W ---11111	ICR02 [R/W] B,H,W ---11111	ICR03 [R/W] B,H,W ---11111	Interrupt Controller [S]
000444_H	ICR04 [R/W] B,H,W ---11111	ICR05 [R/W] B,H,W ---11111	ICR06 [R/W] B,H,W ---11111	ICR07 [R/W] B,H,W ---11111	
000448_H	ICR08 [R/W] B,H,W ---11111	ICR09 [R/W] B,H,W ---11111	ICR10 [R/W] B,H,W ---11111	ICR11 [R/W] B,H,W ---11111	
$00044C_H$	ICR12 [R/W] B,H,W ---11111	ICR13 [R/W] B,H,W ---11111	ICR14 [R/W] B,H,W ---11111	ICR15 [R/W] B,H,W ---11111	
000450_H	ICR16 [R/W] B,H,W ---11111	ICR17 [R/W] B,H,W ---11111	ICR18 [R/W] B,H,W ---11111	ICR19 [R/W] B,H,W ---11111	
000454_H	ICR20 [R/W] B,H,W ---11111	ICR21 [R/W] B,H,W ---11111	ICR22 [R/W] B,H,W ---11111	ICR23 [R/W] B,H,W ---11111	
000458_H	ICR24 [R/W] B,H,W ---11111	ICR25 [R/W] B,H,W ---11111	ICR26 [R/W] B,H,W ---11111	ICR27 [R/W] B,H,W ---11111	
$00045C_H$	ICR28 [R/W] B,H,W ---11111	ICR29 [R/W] B,H,W ---11111	ICR30 [R/W] B,H,W ---11111	ICR31 [R/W] B,H,W ---11111	
000460_H	ICR32 [R/W] B,H,W ---11111	ICR33 [R/W] B,H,W ---11111	ICR34 [R/W] B,H,W ---11111	ICR35 [R/W] B,H,W ---11111	
000464_H	ICR36 [R/W] B,H,W ---11111	ICR37 [R/W] B,H,W ---11111	ICR38 [R/W] B,H,W ---11111	ICR39 [R/W] B,H,W ---11111	
000468_H	ICR40 [R/W] B,H,W ---11111	ICR41 [R/W] B,H,W ---11111	ICR42 [R/W] B,H,W ---11111	ICR43 [R/W] B,H,W ---11111	
$00046C_H$	ICR44 [R/W] B,H,W ---11111	ICR45 [R/W] B,H,W ---11111	ICR46 [R/W] B,H,W ---11111	ICR47 [R/W] B,H,W ---11111	
000470_H to $00047C_H$	—	—	—	—	Reserved [S]
000480_H	RSTRR [R] B,H,W XXXX--XX	RSTCR [R/W] B,H,W 111----0	STBCR [R/W] B,H,W * 000---11	—	Reset Control [S] Power Control [S] *: Writing STBCR by DMA is forbidden
000484_H	—	—	—	—	Reserved [S]
000488_H	DIVR0 [R/W] B,H,W 000-----	DIVR1 [R/W] B,H,W 0001----	DIVR2 [R/W] B,H,W 0011----	—	Clock Control [S]
$00048C_H$	—	—	—	—	Reserved [S]
000490_H	IORR0 [R/W] B,H,W -0000000	IORR1 [R/W] B,H,W -0000000	IORR2 [R/W] B,H,W -0000000	IORR3 [R/W] B,H,W -0000000	DMA request by peripheral [S]
000494_H	IORR4 [R/W] B,H,W -0000000	IORR5 [R/W] B,H,W -0000000	IORR6 [R/W] B,H,W -0000000	IORR7 [R/W] B,H,W -0000000	
000498_H	IORR8 [R/W] B,H,W -0000000	IORR9 [R/W] B,H,W -0000000	IORR10 [R/W] B,H,W -0000000	IORR11 [R/W] B,H,W -0000000	

Address	Address offset value / Register name				Block
	+0	+1	+2	+3	
$0012D4_H$	FRS6 [R/W] B,H,W --00--00 --00--00 --00--00 --00--00				16-bit Free-run timer selection A/D activation compare
$0012D8_H$	FRS7 [R/W] B,H,W --00--00 --00--00 --00--00 --00--00				
$0012DC_H$ to $0012FC_H$	—	—	—	—	Reserved
001300_H	—				Reserved
001304_H	ADTSS0[R/W] B,H,W -------0	—	—	—	12-bit A/D converter 1/2 unit
001308_H	ADTSE0[R/W] B,H,W 00000000 00000000 00000000 00000000				
$00130C_H$	ADCOMP0/ADCOMPB0[R/W] H,W 00000000 00000000	ADCOMP1/ADCOMPB1[R/W] H,W 00000000 00000000			12-bit A/D converter 1/2 unit
001310_H	ADCOMP2/ADCOMPB2[R/W] H,W 00000000 00000000	ADCOMP3/ADCOMPB3[R/W] H,W 00000000 00000000			
001314_H	ADCOMP4/ADCOMPB4[R/W] H,W 00000000 00000000	ADCOMP5/ADCOMPB5[R/W] H,W 00000000 00000000			
001318_H	ADCOMP6/ADCOMPB6[R/W] H,W 00000000 00000000	ADCOMP7/ADCOMPB7[R/W] H,W 00000000 00000000			
$00131C_H$	ADCOMP8/ADCOMPB8[R/W] H,W 00000000 00000000	ADCOMP9/ADCOMPB9[R/W] H,W 00000000 00000000			
001320_H	ADCOMP10/ADCOMPB10[R/W] H,W 00000000 00000000	ADCOMP11/ADCOMPB11[R/W] H,W 00000000 00000000			
001324_H	ADCOMP12/ADCOMPB12[R/W] H,W 00000000 00000000	ADCOMP13/ADCOMPB13[R/W] H,W 00000000 00000000			
001328_H	ADCOMP14/ADCOMPB14[R/W] H,W 00000000 00000000	ADCOMP15/ADCOMPB15[R/W] H,W 00000000 00000000			
$00132C_H$	ADCOMP16/ADCOMPB16[R/W] H,W 00000000 00000000	ADCOMP17/ADCOMPB17[R/W] H,W 00000000 00000000			
001330_H	ADCOMP18/ADCOMPB18[R/W] H,W 00000000 00000000	ADCOMP19/ADCOMPB19[R/W] H,W 00000000 00000000			
001334_H	ADCOMP20/ADCOMPB20[R/W] H,W 00000000 00000000	ADCOMP21/ADCOMPB21[R/W] H,W 00000000 00000000			
001338_H	ADCOMP22/ADCOMPB22[R/W] H,W 00000000 00000000	ADCOMP23/ADCOMPB23[R/W] H,W 00000000 00000000			
$00133C_H$	ADCOMP24/ADCOMPB24[R/W] H,W 00000000 00000000	ADCOMP25/ADCOMPB25[R/W] H,W 00000000 00000000			
001340_H	ADCOMP26/ADCOMPB26[R/W] H,W 00000000 00000000	ADCOMP27/ADCOMPB27[R/W] H,W 00000000 00000000			

80 pins

Interrupt factor	Interrupt number		Interrupt level	Offset	Default address for TBR	RN
	Decimal	Hexa decimal				
Reset	0	0	-	$3FC_H$	$000FFFFC_H$	-
System reserved	1	1	-	$3F8_H$	$000FFFF8_H$	-
System reserved	2	2	-	$3F4_H$	$000FFFF4_H$	-
System reserved	3	3	-	$3F0_H$	$000FFFF0_H$	-
System reserved	4	4	-	$3EC_H$	$000FFFEC_H$	-
FPU exception	5	5	-	$3E8_H$	$000FFFE8_H$	-
Exception of instruction access protection violation	6	6	-	$3E4_H$	$000FFFE4_H$	-
Exception of data access protection violation	7	7	-	$3E0_H$	$000FFFE0_H$	-
Data access error interrupt	8	8	-	$3DC_H$	$000FFFDC_H$	-
INTE instruction	9	9	-	$3D8_H$	$000FFFD8_H$	-
Instruction break	10	0A	-	$3D4_H$	$000FFFD4_H$	-
System reserved	11	0B	-	$3D0_H$	$000FFFD0_H$	-
System reserved	12	0C	-	$3CC_H$	$000FFFCC_H$	-
System reserved	13	0D	-	$3C8_H$	$000FFFC8_H$	-
Exception of invalid instruction	14	0E	-	$3C4_H$	$000FFFC4_H$	-
NMI request Error generation during internal bus diagnosis XBS RAM double-bit error generation Backup RAM double-bit error generation TPU violation	15	0F	15 (F_H) Fixed	$3C0_H$	$000FFFC0_H$	-
External interrupt 0-7	16	10	ICR00	$3BC_H$	$000FFFBC_H$	0
External interrupt 8-15 External low-voltage detection interrupt	17	11	ICR01	$3B8_H$	$000FFFB8_H$	1*7
Reload timer 0/1/4/5	18	12	ICR02	$3B4_H$	$000FFFB4_H$	2*2
Reload timer 3/6/7	19	13	ICR03	$3B0_H$	$000FFFB0_H$	3*2
Multi-function serial interface ch.0 (reception completed) Multi-function serial interface ch.0 (status)	20	14	ICR04	$3AC_H$	$000FFFAC_H$	4*1
Multi-function serial interface ch.0 (transmission completed)	21	15	ICR05	$3A8_H$	$000FFFA8_H$	5*1
-	22	16	ICR06	$3A4_H$	$000FFFA4_H$	-*6
-	23	17	ICR07	$3A0_H$	$000FFFA0_H$	-*6
Multi-function serial interface ch.2 (reception completed) Multi-function serial interface ch.2 (status)	24	18	ICR08	$39C_H$	$000FFF9C_H$	8*1
Multi-function serial interface ch.2 (transmission completed)	25	19	ICR09	398_H	$000FFF98_H$	9*1
Multi-function serial interface ch.3 (reception completed) Multi-function serial interface ch.3 (status)	26	1A	ICR10	394_H	$000FFF94_H$	10*1
Multi-function serial interface ch.3 (transmission completed)	27	1B	ICR11	390_H	$000FFF90_H$	11

120 pins

Interrupt factor	Interrupt number		Interrupt level	Offset	Default address for TBR	RN
	Decimal	Hexadecimal				
Reset	0	0	-	$3FC_H$	$000FFFFC_H$	-
System reserved	1	1	-	$3F8_H$	$000FFFF8_H$	-
System reserved	2	2	-	$3F4_H$	$000FFFF4_H$	-
System reserved	3	3	-	$3F0_H$	$000FFFF0_H$	-
System reserved	4	4	-	$3EC_H$	$000FFFEC_H$	-
FPU exception	5	5	-	$3E8_H$	$000FFFE8_H$	-
Exception of instruction access protection violation	6	6	-	$3E4_H$	$000FFFE4_H$	-
Exception of data access protection violation	7	7	-	$3E0_H$	$000FFFE0_H$	-
Data access error interrupt	8	8	-	$3DC_H$	$000FFFDC_H$	-
INTE instruction	9	9	-	$3D8_H$	$000FFFD8_H$	-
Instruction break	10	0A	-	$3D4_H$	$000FFFD4_H$	-
System reserved	11	0B	-	$3D0_H$	$000FFFD0_H$	-
System reserved	12	0C	-	$3CC_H$	$000FFFCC_H$	-
System reserved	13	0D	-	$3C8_H$	$000FFFC8_H$	-
Exception of invalid instruction	14	0E	-	$3C4_H$	$000FFFC4_H$	-
NMI request Error generation during internal bus diagnosis XBS RAM double-bit error generation Backup RAM double-bit error generation TPU violation	15	0F	15 (F_H) Fixed	$3C0_H$	$000FFFC0_H$	-
External interrupt 0-7	16	10	ICR00	$3BC_H$	$000FFFBC_H$	0
External interrupt 8-15 External low-voltage detection interrupt	17	11	ICR01	$3B8_H$	$000FFFB8_H$	1*7
Reload timer 0/1/4/5	18	12	ICR02	$3B4_H$	$000FFFB4_H$	2*2
Reload timer 2/3/6/7	19	13	ICR03	$3B0_H$	$000FFFB0_H$	3*2
Multi-function serial interface ch.0 (reception completed) Multi-function serial interface ch.0 (status)	20	14	ICR04	$3AC_H$	$000FFFAC_H$	4*1
Multi-function serial interface ch.0 (transmission completed)	21	15	ICR05	$3A8_H$	$000FFFA8_H$	5*1
Multi-function serial interface ch.1 (reception completed) Multi-function serial interface ch.1 (status)	22	16	ICR06	$3A4_H$	$000FFFA4_H$	6*1
Multi-function serial interface ch.1 (transmission completed)	23	17	ICR07	$3A0_H$	$000FFFA0_H$	7*1
Multi-function serial interface ch.2 (reception completed) Multi-function serial interface ch.2 (status)	24	18	ICR08	$39C_H$	$000FFF9C_H$	8*1
Multi-function serial interface ch.2 (transmission completed)	25	19	ICR09	398_H	$000FFF98_H$	9*1
Multi-function serial interface ch.3 (reception completed) Multi-function serial interface ch.3 (status)	26	1A	ICR10	394_H	$000FFF94_H$	10*1

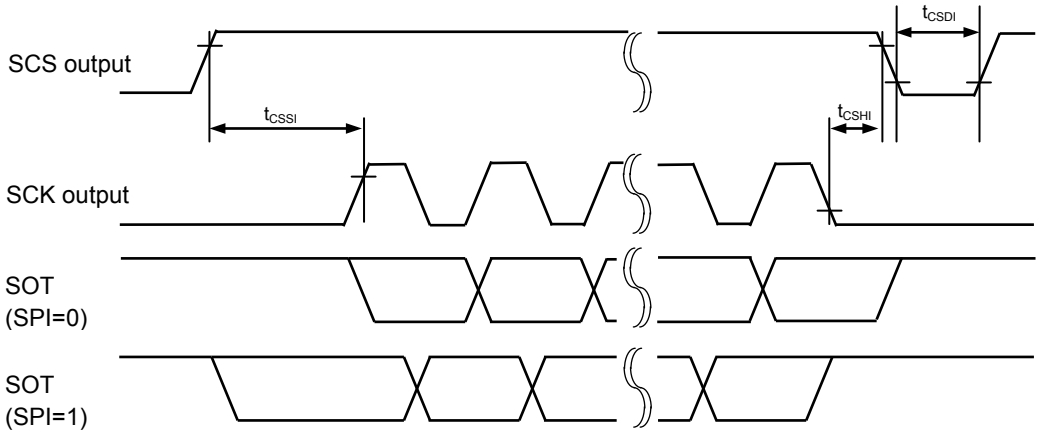

When Serial chip select is used , Serial clock output mark level "L",
Serial chip select Inactive level "L"
Master mode

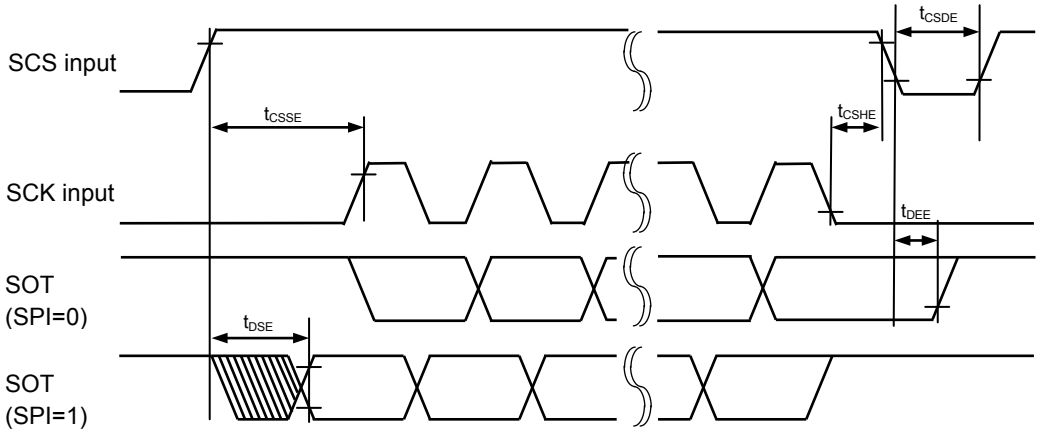

When Serial chip select is used , Serial clock output mark level "L",
Serial chip select Inactive level "L"
Slave mode

Flash memory

(1) Electrical Characteristics

Parameter	Value			Unit	Remarks
	Min	Typ	Max		
Sector erase time	–	200	800	ms	8 Kbytes sector*1, excluding internal preprogramming time
	–	300	1100	ms	8 Kbytes sector*1, including internal preprogramming time
	–	400	2000	ms	64 Kbytes sector*1, excluding internal preprogramming time
	–	700	3700	ms	64 Kbytes sector*1, including internal preprogramming time
8-bit writing time	–	9	288	µs	Exclusive of overhead time at system level*1
16-bit writing time	–	12	384	µs	Exclusive of overhead time at system level*1
ECC writing time	–	9	288	µs	Exclusive of overhead time at system level*1
Erase cycle*2/ Data retain time	1,000 cycles/ 20 years, 10,000 cycles/ 10 years, 100,000 cycles/ 5 years	–	–	–	Average T_A=+85°C*3

*1: The guaranteed value for erasure up to 100,000 cycles.

*2: Number of erase cycles for each sector.

*3: This value comes from the technology qualification (using Arrhenius equation to translate high temperature measurements into normalized value at + 85°C).

(2) Notes

While the Flash memory is written or erased, shutdown of the external power (Vcc) is prohibited.

In the application system where Vcc might be shut down while writing or erasing, be sure to turn the power off by using an external voltage detection function.

To put it concretely, after the external power supply voltage falls below the detection voltage (V_{DL}*), hold Vcc at 2.7V or more within the duration calculated by the following expression:

$$Td^{*}[\mu s] + (\text{period of PCLK } [\mu s] \times 257) + 50\ [\mu s]$$

*: See “4.AC Characteristics (8) Low-voltage detection (External low-voltage detection) ”

15. Ordering Information MB91F52xxxD

Part number	Sub clock	CSV Initial value	LVD Initial value	Package*
MB91F526LWDPMC	Yes	ON	ON	LQP・176 pin, Plastic
MB91F526LJDPMC		OFF	ON	
MB91F525LWDPMC		ON	ON	
MB91F525LJDPMC		OFF	ON	
MB91F524LWDPMC		ON	ON	
MB91F524LJDPMC		OFF	ON	
MB91F523LWDPMC		ON	ON	
MB91F523LJDPMC		OFF	ON	
MB91F522LWDPMC		ON	ON	
MB91F522LJDPMC		OFF	ON	
MB91F526LSDPMC	None	ON	ON	
MB91F526LHDPMC		OFF	ON	
MB91F525LSDPMC		ON	ON	
MB91F525LHDPMC		OFF	ON	
MB91F524LSDPMC		ON	ON	
MB91F524LHDPMC		OFF	ON	
MB91F523LSDPMC		ON	ON	
MB91F523LHDPMC		OFF	ON	
MB91F522LSDPMC		ON	ON	
MB91F522LHDPMC		OFF	ON	
MB91F526KWDPMC	Yes	ON	ON	LQS・144 pin, (Lead pitch 0.5mm) Plastic
MB91F526KJDPMC		OFF	ON	
MB91F525KWDPMC		ON	ON	
MB91F525KJDPMC		OFF	ON	
MB91F524KWDPMC		ON	ON	
MB91F524KJDPMC		OFF	ON	
MB91F523KWDPMC		ON	ON	
MB91F523KJDPMC		OFF	ON	
MB91F522KWDPMC		ON	ON	
MB91F522KJDPMC		OFF	ON	
MB91F526KSDPMC	None	ON	ON	
MB91F526KHDPMC		OFF	ON	
MB91F525KSDPMC		ON	ON	
MB91F525KHDPMC		OFF	ON	
MB91F524KSDPMC		ON	ON	
MB91F524KHDPMC		OFF	ON	
MB91F523KSDPMC		ON	ON	
MB91F523KHDPMC		OFF	ON	
MB91F522KSDPMC		ON	ON	
MB91F522KHDPMC		OFF	ON	

■ **Workaround**

It is necessary to satisfy the below both conditions of (1) and (2).

(1) Interrupt levels that are used as sources for recovering from the watch mode (power off) are ‘31’, before CPU state changes to the watch mode (power off)

(2) Don’t use NMIX pin as source for recovering from the watch mode (power off)

■ **Fix Status**

Will not be planned

<table>
<tr><th>Page</th><th>Section</th><th>Change Results</th></tr>
<tr><td>20</td><td>■PIN Description</td><td>(Continued)
(Correct)
<table>
<tr><th colspan="6">Pin no.</th><th rowspan="2">Pin Name</th></tr>
<tr><th>64</th><th>80</th><th>100</th><th>120</th><th>144</th><th>176</th></tr>
<tr><td rowspan="5">-</td><td rowspan="5">-</td><td rowspan="5">4 *1</td><td rowspan="5">7 *1</td><td rowspan="5">10</td><td rowspan="5">12</td><td>P025</td></tr>
<tr><td>WR1X *4, *5</td></tr>
<tr><td>SOT4_1</td></tr>
<tr><td>PPG25_0</td></tr>
<tr><td>TIN2_0</td></tr>
<tr><td rowspan="2">-</td><td rowspan="2">-</td><td rowspan="2">-</td><td rowspan="2">-</td><td rowspan="2">-</td><td rowspan="2">13</td><td>P172</td></tr>
<tr><td>PPG38_1</td></tr>
<tr><td rowspan="5">-</td><td rowspan="5">4 *1</td><td rowspan="5">5 *1</td><td rowspan="5">8 *1</td><td rowspan="5">11</td><td rowspan="5">14</td><td>P026</td></tr>
<tr><td>A00 *3, *4, *5</td></tr>
<tr><td>SCK4_1</td></tr>
<tr><td>PPG26_0</td></tr>
<tr><td>TIN3_0</td></tr>
<tr><td rowspan="6">4 *1</td><td rowspan="6">5 *1</td><td rowspan="6">6 *1</td><td rowspan="6">9 *1</td><td rowspan="6">12</td><td rowspan="6">15</td><td>P027</td></tr>
<tr><td>A01 *2, *3, *4, *5</td></tr>
<tr><td>SCS40_1</td></tr>
<tr><td>PPG27_0</td></tr>
<tr><td>TOT0_0</td></tr>
<tr><td>RTO3_1</td></tr>
<tr><td rowspan="2">-</td><td rowspan="2">-</td><td rowspan="2">-</td><td rowspan="2">-</td><td rowspan="2">-</td><td rowspan="2">16</td><td>P173</td></tr>
<tr><td>PPG39_1</td></tr>
<tr><td rowspan="5">-</td><td rowspan="5">-</td><td rowspan="5">7 *1</td><td rowspan="5">10 *1</td><td rowspan="5">13</td><td rowspan="5">17</td><td>P030</td></tr>
<tr><td>A02 *4, *5</td></tr>
<tr><td>SCS41_1</td></tr>
<tr><td>PPG28_0</td></tr>
<tr><td>TOT1_0</td></tr>
<tr><td rowspan="5">-</td><td rowspan="5">6 *1</td><td rowspan="5">8 *1</td><td rowspan="5">11 *1</td><td rowspan="5">14</td><td rowspan="5">18</td><td>P031</td></tr>
<tr><td>A03 *3, *4, *5</td></tr>
<tr><td>SCS42_1</td></tr>
<tr><td>PPG29_0</td></tr>
<tr><td>TOT2_0 *3</td></tr>
<tr><td rowspan="5">5 *1</td><td rowspan="5">7 *1</td><td rowspan="5">9 *1</td><td rowspan="5">12 *1</td><td rowspan="5">15</td><td rowspan="5">19</td><td>P032</td></tr>
<tr><td>A04 *2, *3, *4, *5</td></tr>
<tr><td>SCS43_1</td></tr>
<tr><td>PPG30_0</td></tr>
<tr><td>TOT3_0</td></tr>
<tr><td>RTO2_1</td></tr>
<tr><td rowspan="7">6 *1</td><td rowspan="7">8 *1</td><td rowspan="7">10 *1</td><td rowspan="7">13 *1</td><td rowspan="7">16</td><td rowspan="7">20</td><td>P033</td></tr>
<tr><td>A05 *2, *3, *4, *5</td></tr>
<tr><td>PPG31_0</td></tr>
<tr><td>ICU3_3</td></tr>
<tr><td>TIN4_0</td></tr>
<tr><td>RTO1_1</td></tr>
<tr><td>SCK3_2</td></tr>
</table></td></tr>
</table>

<table>
<tr><th>Page</th><th>Section</th><th>Change Results</th></tr>
<tr><td>23, 24</td><td>■PIN Description</td><td>A List of "Pin Description" modified.

(Error)
<table>
<tr><th colspan="6">Pin no.</th><th rowspan="2">Pin Name</th></tr>
<tr><th>64</th><th>80</th><th>100</th><th>120</th><th>144</th><th>176</th></tr>
<tr><td rowspan="6">15</td><td rowspan="6">18</td><td rowspan="6">23</td><td rowspan="6">27</td><td rowspan="6">30</td><td rowspan="6">37</td><td>P047</td></tr>
<tr><td>A17</td></tr>
<tr><td>AN45</td></tr>
<tr><td>TRG8_0</td></tr>
<tr><td>TIN3_2</td></tr>
<tr><td>SOT0_1</td></tr>
<tr><td rowspan="2">-</td><td rowspan="2">-</td><td rowspan="2">-</td><td rowspan="2">-</td><td rowspan="2">-</td><td rowspan="2">38</td><td>P177</td></tr>
<tr><td>TRG11_0</td></tr>
<tr><td rowspan="4">-</td><td rowspan="4">-</td><td rowspan="4">-</td><td rowspan="4">28</td><td rowspan="4">31</td><td rowspan="4">39</td><td>P050</td></tr>
<tr><td>A18</td></tr>
<tr><td>TRG5_1</td></tr>
<tr><td>PPG33_0</td></tr>
<tr><td rowspan="3">-</td><td rowspan="3">-</td><td rowspan="3">-</td><td rowspan="3">-</td><td rowspan="3">32</td><td rowspan="3">40</td><td>P051</td></tr>
<tr><td>A19</td></tr>
<tr><td>TRG9_0</td></tr>
<tr><td rowspan="4">-</td><td rowspan="4">-</td><td rowspan="4">-</td><td rowspan="4">-</td><td rowspan="4">33</td><td rowspan="4">41</td><td>P052</td></tr>
<tr><td>A20</td></tr>
<tr><td>PPG34_0</td></tr>
<tr><td>INT14_0</td></tr>
<tr><td rowspan="6">16</td><td rowspan="6">19</td><td rowspan="6">24</td><td rowspan="6">29</td><td rowspan="6">34</td><td rowspan="6">42</td><td>P053</td></tr>
<tr><td>A21</td></tr>
<tr><td>AN44</td></tr>
<tr><td>PPG35_0</td></tr>
<tr><td>INT14_1</td></tr>
<tr><td>SCK0_1</td></tr>
<tr><td rowspan="3">-</td><td rowspan="3">-</td><td rowspan="3">-</td><td rowspan="3">-</td><td rowspan="3">35</td><td rowspan="3">43</td><td>P054</td></tr>
<tr><td>SYSCLK</td></tr>
<tr><td>PPG36_0</td></tr>
<tr><td rowspan="6">17</td><td rowspan="6">22</td><td rowspan="6">27</td><td rowspan="6">32</td><td rowspan="6">38</td><td rowspan="6">46</td><td>P055</td></tr>
<tr><td>CS2X</td></tr>
<tr><td>SIN10_0</td></tr>
<tr><td>AN43</td></tr>
<tr><td>PPG37_0</td></tr>
<tr><td>TIN4_1</td></tr>
<tr><td colspan="6"></td><td></td></tr>
<tr><td rowspan="7">-</td><td rowspan="7">-</td><td rowspan="7">-</td><td rowspan="7">33</td><td rowspan="7">39</td><td rowspan="7">49</td><td>P056</td></tr>
<tr><td>CS3X</td></tr>
<tr><td>ICU9_0</td></tr>
<tr><td>PPG0_1</td></tr>
<tr><td>ICU0_1</td></tr>
<tr><td>TIN5_1</td></tr>
<tr><td>DTTI_2</td></tr>
</table></td></tr>
</table>

Page	Section	Change Results
24	■PIN Description	A List of "Pin Description" modified. (Error) Function*2 General-purpose I/O port External Bus chip select 3 output pin(0) Input capture ch.9 input pin(0) PPG ch.0 output pin(1) Input capture ch.0 input pin(1) Reload timer ch.5 event input pin(1) Waveform generator ch.0 to ch.5 input pin(2) (Correct) Function*9 General-purpose I/O port External Bus chip select 3 output pin Input capture ch.9 input pin(0) PPG ch.0 output pin(1) Input capture ch.0 input pin(1) Reload timer ch.5 event input pin(1) Waveform generator ch.0 to ch.5 input pin(2)

<table>
<tr><th>Page</th><th>Section</th><th>Change Results</th></tr>
<tr><td>33</td><td>■PIN Description</td><td>
A List of "Pin Description" modified.

(Error)
<table>
<tr><th colspan="6">Pin no.</th><th rowspan="2">Pin Name</th></tr>
<tr><th>64</th><th>80</th><th>100</th><th>120</th><th>144</th><th>176</th></tr>
<tr><td rowspan="5">-</td><td rowspan="5">-</td><td rowspan="5">94</td><td rowspan="5">111</td><td rowspan="5">131</td><td rowspan="5">159</td><td>P000</td></tr>
<tr><td>D16</td></tr>
<tr><td>SIN1_0</td></tr>
<tr><td>TIOA0_1</td></tr>
<tr><td>INT2_0</td></tr>
<tr><td rowspan="4">-</td><td rowspan="4">75</td><td rowspan="4">95</td><td rowspan="4">112</td><td rowspan="4">132</td><td rowspan="4">160</td><td>P001</td></tr>
<tr><td>D17</td></tr>
<tr><td>SOT1_0</td></tr>
<tr><td>TIOA1_1</td></tr>
</table>
(Correct)
<table>
<tr><th colspan="6">Pin no.</th><th rowspan="2">Pin Name</th></tr>
<tr><th>64</th><th>80</th><th>100</th><th>120</th><th>144</th><th>176</th></tr>
<tr><td rowspan="5">-</td><td rowspan="5">-</td><td rowspan="5">94*1</td><td rowspan="5">111*1</td><td rowspan="5">131</td><td rowspan="5">159</td><td>P000</td></tr>
<tr><td>D16*4, *5</td></tr>
<tr><td>SIN1_0</td></tr>
<tr><td>TIOA0_1*4</td></tr>
<tr><td>INT2_0</td></tr>
<tr><td rowspan="4">-</td><td rowspan="4">75*1</td><td rowspan="4">95*1</td><td rowspan="4">112*1</td><td rowspan="4">132</td><td rowspan="4">160</td><td>P001</td></tr>
<tr><td>D17*3, *4, *5</td></tr>
<tr><td>SOT1_0*3</td></tr>
<tr><td>TIOA1_1</td></tr>
</table>
</td></tr>
</table>

Sales, Solutions, and Legal Information

Worldwide Sales and Design Support

Cypress maintains a worldwide network of offices, solution centers, manufacturer's representatives, and distributors. To find the office closest to you, visit us at Cypress Locations.

Products

ARM® Cortex® Microcontrollers	cypress.com/arm
Automotive	cypress.com/automotive
Clocks & Buffers	cypress.com/clocks
Interface	cypress.com/interface
Lighting & Power Control	cypress.com/powerpsoc
Memory	cypress.com/memory
PSoC	cypress.com/psoc
Touch Sensing	cypress.com/touch
USB Controllers	cypress.com/usb
Wireless/RF	cypress.com/wireless

PSoC® Solutions

PSoC 1 | PSoC 3 | PSoC 4 | PSoC 5LP

Cypress Developer Community

Community | Forums | Blogs | Video | Training | Components

Technical Support

cypress.com/support

ARM and Cortex are the registered trademarks of ARM Limited in the EU and other countries.

© Cypress Semiconductor Corporation, 2014-2016. This document is the property of Cypress Semiconductor Corporation and its subsidiaries, including Spansion LLC ("Cypress"). This document, including any software or firmware included or referenced in this document ("Software"), is owned by Cypress under the intellectual property laws and treaties of the United States and other countries worldwide. Cypress reserves all rights under such laws and treaties and does not, except as specifically stated in this paragraph, grant any license under its patents, copyrights, trademarks, or other intellectual property rights. If the Software is not accompanied by a license agreement and you do not otherwise have a written agreement with Cypress governing the use of the Software, then Cypress hereby grants you a personal, non-exclusive, nontransferable license (without the right to sublicense) (1) under its copyright rights in the Software (a) for Software provided in source code form, to modify and reproduce the Software solely for use with Cypress hardware products, only internally within your organization, and (b) to distribute the Software in binary code form externally to end users (either directly or indirectly through resellers and distributors), solely for use on Cypress hardware product units, and (2) under those claims of Cypress's patents that are infringed by the Software (as provided by Cypress, unmodified) to make, use, distribute, and import the Software solely for use with Cypress hardware products. Any other use, reproduction, modification, translation, or compilation of the Software is prohibited.

TO THE EXTENT PERMITTED BY APPLICABLE LAW, CYPRESS MAKES NO WARRANTY OF ANY KIND, EXPRESS OR IMPLIED, WITH REGARD TO THIS DOCUMENT OR ANY SOFTWARE OR ACCOMPANYING HARDWARE, INCLUDING, BUT NOT LIMITED TO, THE IMPLIED WARRANTIES OF MERCHANTABILITY AND FITNESS FOR A PARTICULAR PURPOSE. To the extent permitted by applicable law, Cypress reserves the right to make changes to this document without further notice. Cypress does not assume any liability arising out of the application or use of any product or circuit described in this document. Any information provided in this document, including any sample design information or programming code, is provided only for reference purposes. It is the responsibility of the user of this document to properly design, program, and test the functionality and safety of any application made of this information and any resulting product. Cypress products are not designed, intended, or authorized for use as critical components in systems designed or intended for the operation of weapons, weapons systems, nuclear installations, life-support devices or systems, other medical devices or systems (including resuscitation equipment and surgical implants), pollution control or hazardous substances management, or other uses where the failure of the device or system could cause personal injury, death, or property damage ("Unintended Uses"). A critical component is any component of a device or system whose failure to perform can be reasonably expected to cause the failure of the device or system, or to affect its safety or effectiveness. Cypress is not liable, in whole or in part, and you shall and hereby do release Cypress from any claim, damage, or other liability arising from or related to all Unintended Uses of Cypress products. You shall indemnify and hold Cypress harmless from and against all claims, costs, damages, and other liabilities, including claims for personal injury or death, arising from or related to any Unintended Uses of Cypress products.

Cypress, the Cypress logo, Spansion, the Spansion logo, and combinations thereof, PSoC, CapSense, EZ-USB, F-RAM, and Traveo are trademarks or registered trademarks of Cypress in the United States and other countries. For a more complete list of Cypress trademarks, visit cypress.com. Other names and brands may be claimed as property of their respective owners.