Welcome to E-XFL.COM

Understanding Embedded - FPGAs (Field Programmable Gate Array)

Embedded - FPGAs, or Field Programmable Gate Arrays, are advanced integrated circuits that offer unparalleled flexibility and performance for digital systems. Unlike traditional fixed-function logic devices, FPGAs can be programmed and reprogrammed to execute a wide array of logical operations, enabling customized functionality tailored to specific applications. This reprogrammability allows developers to iterate designs quickly and implement complex functions without the need for custom hardware.

Applications of Embedded - FPGAs

The versatility of Embedded - FPGAs makes them indispensable in numerous fields. In telecommunications.

Details	
Product Status	Obsolete
Number of LABs/CLBs	768
Number of Logic Elements/Cells	-
Total RAM Bits	-
Number of I/O	130
Number of Gates	12000
Voltage - Supply	2.25V ~ 5.25V
Mounting Type	Surface Mount
Operating Temperature	0°C ~ 70°C (TA)
Package / Case	208-BFQFP
Supplier Device Package	208-PQFP (28x28)
Purchase URL	https://www.e-xfl.com/product-detail/microsemi/a54sx08a-pqg208

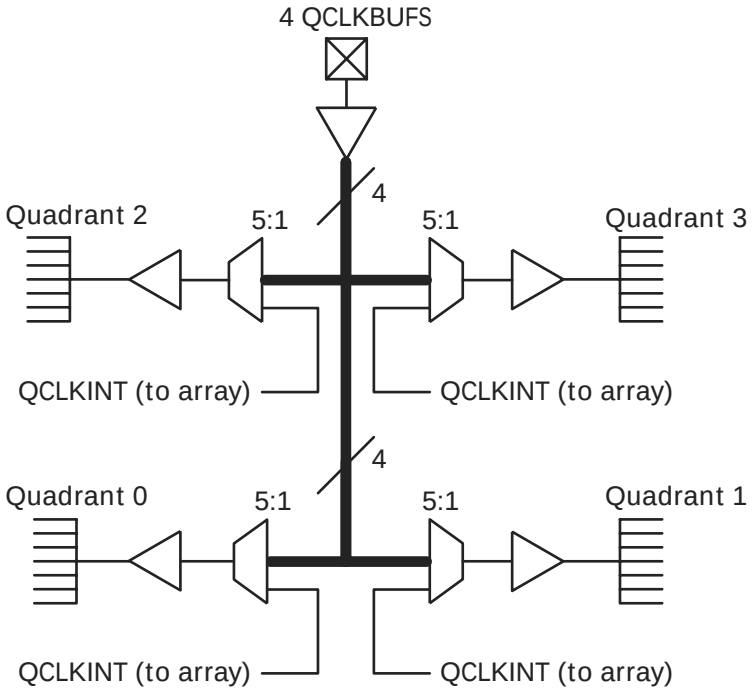

Figure 1-9 • **SX-A QCLK Architecture**

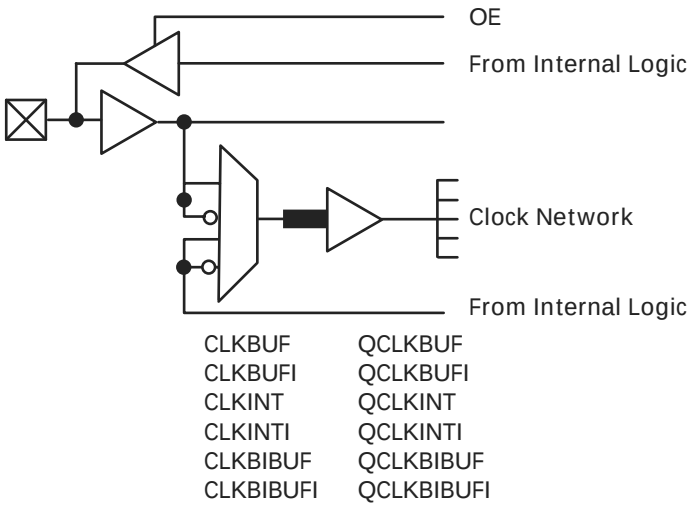

Figure 1-10 • **A54SX72A Routed Clock and QCLK Buffer**

Table 2-19 • **A54SX08A Timing Characteristics (Worst-Case Commercial Conditions V_{CCA} = 2.25 V, V_{CCI} = 3.0 V, T_J = 70°C)**

Parameter	Description	–2 Speed		–1 Speed		Std. Speed		–F Speed	Units
		Min.	Max.	Min.	Max.	Min.	Max.	Min. Max.	
3.3 V PCI Output Module Timing [1]									
t_{DLH}	Data-to-Pad Low to High		2.2		2.4		2.9	4.0	ns
t_{DHL}	Data-to-Pad High to Low		2.3		2.6		3.1	4.3	ns
t_{ENZL}	Enable-to-Pad, Z to L		1.7		1.9		2.2	3.1	ns
t_{ENZH}	Enable-to-Pad, Z to H		2.2		2.4		2.9	4.0	ns
t_{ENLZ}	Enable-to-Pad, L to Z		2.8		3.2		3.8	5.3	ns
t_{ENHZ}	Enable-to-Pad, H to Z		2.3		2.6		3.1	4.3	ns
d_{TLH} [2]	Delta Low to High		0.03		0.03		0.04	0.045	ns/pF
d_{THL} [2]	Delta High to Low		0.015		0.015		0.015	0.025	ns/pF
3.3 V LVTTL Output Module Timing [3]									
t_{DLH}	Data-to-Pad Low to High		3.0		3.4		4.0	5.6	ns
t_{DHL}	Data-to-Pad High to Low		3.0		3.3		3.9	5.5	ns
t_{DHLS}	Data-to-Pad High to Low—low slew		10.4		11.8		13.8	19.3	ns
t_{ENZL}	Enable-to-Pad, Z to L		2.6		2.9		3.4	4.8	ns
t_{ENZLS}	Enable-to-Pad, Z to L—low slew		18.9		21.3		25.4	34.9	ns
t_{ENZH}	Enable-to-Pad, Z to H		3		3.4		4	5.6	ns
t_{ENLZ}	Enable-to-Pad, L to Z		3.3		3.7		4.4	6.2	ns
t_{ENHZ}	Enable-to-Pad, H to Z		3		3.3		3.9	5.5	ns
d_{TLH} [2]	Delta Low to High		0.03		0.03		0.04	0.045	ns/pF
d_{THL} [2]	Delta High to Low		0.015		0.015		0.015	0.025	ns/pF
d_{THLS} [2]	Delta High to Low—low slew		0.053		0.067		0.073	0.107	ns/pF

Notes:

1. Delays based on 10 pF loading and 25 Ω resistance.
2. To obtain the slew rate, substitute the appropriate Delta value, load capacitance, and the V_{CCI} value into the following equation:
   Slew Rate [V/ns] = $(0.1*V_{CCI} - 0.9*V_{CCI}) / (C_{load} * d_{T[LH|HL|HLS]})$
   where C_{load} is the load capacitance driven by the I/O in pF
   $d_{T[LH|HL|HLS]}$ is the worst case delta value from the datasheet in ns/pF.
3. Delays based on 35 pF loading.

Table 2-33 • A54SX32A Timing Characteristics
(Worst-Case Commercial Conditions V_{CCA} = 2.25 V, V_{CCI} = 3.0 V, T_J = 70°C)

		–3 Speed [1]		–2 Speed		–1 Speed		Std. Speed		–F Speed		
Parameter	Description	Min.	Max.	Min.	Max.	Min.	Max.	Min.	Max.	Min.	Max.	Units
3.3 V PCI Output Module Timing [2]												
t_{DLH}	Data-to-Pad Low to High		1.9		2.2		2.4		2.9		4.0	ns
t_{DHL}	Data-to-Pad High to Low		2.0		2.3		2.6		3.1		4.3	ns
t_{ENZL}	Enable-to-Pad, Z to L		1.4		1.7		1.9		2.2		3.1	ns
t_{ENZH}	Enable-to-Pad, Z to H		1.9		2.2		2.4		2.9		4.0	ns
t_{ENLZ}	Enable-to-Pad, L to Z		2.5		2.8		3.2		3.8		5.3	ns
t_{ENHZ}	Enable-to-Pad, H to Z		2.0		2.3		2.6		3.1		4.3	ns
d_{TLH} [3]	Delta Low to High		0.025		0.03		0.03		0.04		0.045	ns/pF
d_{THL} [3]	Delta High to Low		0.015		0.015		0.015		0.015		0.025	ns/pF
3.3 V LVTTL Output Module Timing [4]												
t_{DLH}	Data-to-Pad Low to High		2.6		3.0		3.4		4.0		5.6	ns
t_{DHL}	Data-to-Pad High to Low		2.6		3.0		3.3		3.9		5.5	ns
t_{DHLS}	Data-to-Pad High to Low—low slew		9.0		10.4		11.8		13.8		19.3	ns
t_{ENZL}	Enable-to-Pad, Z to L		2.2		2.6		2.9		3.4		4.8	ns
t_{ENZLS}	Enable-to-Pad, Z to L—low slew		15.8		18.9		21.3		25.4		34.9	ns
t_{ENZH}	Enable-to-Pad, Z to H		2.6		3.0		3.4		4.0		5.6	ns
t_{ENLZ}	Enable-to-Pad, L to Z		2.9		3.3		3.7		4.4		6.2	ns
t_{ENHZ}	Enable-to-Pad, H to Z		2.6		3.0		3.3		3.9		5.5	ns
d_{TLH} [3]	Delta Low to High		0.025		0.03		0.03		0.04		0.045	ns/pF
d_{THL} [3]	Delta High to Low		0.015		0.015		0.015		0.015		0.025	ns/pF
d_{THLS} [3]	Delta High to Low—low slew		0.053		0.053		0.067		0.073		0.107	ns/pF

Notes:
1. All –3 speed grades have been discontinued.
2. Delays based on 10 pF loading and 25 resistance.
3. To obtain the slew rate, substitute the appropriate Delta value, load

144-Pin FBGA			
Pin Number	A54SX08A Function	A54SX16A Function	A54SX32A Function
G1	I/O	I/O	I/O
G2	GND	GND	GND
G3	I/O	I/O	I/O
G4	I/O	I/O	I/O
G5	GND	GND	GND
G6	GND	GND	GND
G7	GND	GND	GND
G8	V_{CCI}	V_{CCI}	V_{CCI}
G9	I/O	I/O	I/O
G10	I/O	I/O	I/O
G11	I/O	I/O	I/O
G12	I/O	I/O	I/O
H1	TRST, I/O	TRST, I/O	TRST, I/O
H2	I/O	I/O	I/O
H3	I/O	I/O	I/O
H4	I/O	I/O	I/O
H5	V_{CCA}	V_{CCA}	V_{CCA}
H6	V_{CCA}	V_{CCA}	V_{CCA}
H7	V_{CCI}	V_{CCI}	V_{CCI}
H8	V_{CCI}	V_{CCI}	V_{CCI}
H9	V_{CCA}	V_{CCA}	V_{CCA}
H10	I/O	I/O	I/O
H11	I/O	I/O	I/O
H12	NC	NC	NC
J1	I/O	I/O	I/O
J2	I/O	I/O	I/O
J3	I/O	I/O	I/O
J4	I/O	I/O	I/O
J5	I/O	I/O	I/O
J6	PRB, I/O	PRB, I/O	PRB, I/O
J7	I/O	I/O	I/O
J8	I/O	I/O	I/O
J9	I/O	I/O	I/O
J10	I/O	I/O	I/O
J11	I/O	I/O	I/O
J12	V_{CCA}	V_{CCA}	V_{CCA}

144-Pin FBGA			
Pin Number	A54SX08A Function	A54SX16A Function	A54SX32A Function
K1	I/O	I/O	I/O
K2	I/O	I/O	I/O
K3	I/O	I/O	I/O
K4	I/O	I/O	I/O
K5	I/O	I/O	I/O
K6	I/O	I/O	I/O
K7	GND	GND	GND
K8	I/O	I/O	I/O
K9	I/O	I/O	I/O
K10	GND	GND	GND
K11	I/O	I/O	I/O
K12	I/O	I/O	I/O
L1	GND	GND	GND
L2	I/O	I/O	I/O
L3	I/O	I/O	I/O
L4	I/O	I/O	I/O
L5	I/O	I/O	I/O
L6	I/O	I/O	I/O
L7	HCLK	HCLK	HCLK
L8	I/O	I/O	I/O
L9	I/O	I/O	I/O
L10	I/O	I/O	I/O
L11	I/O	I/O	I/O
L12	I/O	I/O	I/O
M1	I/O	I/O	I/O
M2	I/O	I/O	I/O
M3	I/O	I/O	I/O
M4	I/O	I/O	I/O
M5	I/O	I/O	I/O
M6	I/O	I/O	I/O
M7	V_{CCA}	V_{CCA}	V_{CCA}
M8	I/O	I/O	I/O
M9	I/O	I/O	I/O
M10	I/O	I/O	I/O
M11	TDO, I/O	TDO, I/O	TDO, I/O
M12	I/O	I/O	I/O

484-Pin FBGA		
Pin Number	A54SX32A Function	A54SX72A Function
AD18	I/O	I/O
AD19	I/O	I/O
AD20	I/O	I/O
AD21	I/O	I/O
AD22	I/O	I/O
AD23	V_{CCI}	V_{CCI}
AD24	NC*	I/O
AD25	NC*	I/O
AD26	NC*	I/O
AE1	NC*	NC
AE2	I/O	I/O
AE3	NC*	I/O
AE4	NC*	I/O
AE5	NC*	I/O
AE6	NC*	I/O
AE7	I/O	I/O
AE8	I/O	I/O
AE9	I/O	I/O
AE10	I/O	I/O
AE11	NC*	I/O
AE12	I/O	I/O
AE13	I/O	I/O
AE14	I/O	I/O
AE15	NC*	I/O
AE16	NC*	I/O
AE17	I/O	I/O
AE18	I/O	I/O
AE19	I/O	I/O
AE20	I/O	I/O
AE21	NC*	I/O
AE22	NC*	I/O
AE23	NC*	I/O
AE24	NC*	I/O
AE25	NC*	NC
AE26	NC*	NC

484-Pin FBGA		
Pin Number	A54SX32A Function	A54SX72A Function
AF1	NC*	NC
AF2	NC*	NC
AF3	NC	I/O
AF4	NC*	I/O
AF5	NC*	I/O
AF6	NC*	I/O
AF7	I/O	I/O
AF8	I/O	I/O
AF9	I/O	I/O
AF10	I/O	I/O
AF11	NC*	I/O
AF12	NC*	NC
AF13	HCLK	HCLK
AF14	I/O	QCLKB
AF15	NC*	I/O
AF16	NC*	I/O
AF17	I/O	I/O
AF18	I/O	I/O
AF19	I/O	I/O
AF20	NC*	I/O
AF21	NC*	I/O
AF22	NC*	I/O
AF23	NC*	I/O
AF24	NC*	I/O
AF25	NC*	NC
AF26	NC*	NC
B1	NC*	NC
B2	NC*	NC
B3	NC*	I/O
B4	NC*	I/O
B5	NC*	I/O
B6	I/O	I/O
B7	I/O	I/O
B8	I/O	I/O
B9	I/O	I/O

484-Pin FBGA		
Pin Number	A54SX32A Function	A54SX72A Function
B10	I/O	I/O
B11	NC*	I/O
B12	NC*	I/O
B13	V_{CCI}	V_{CCI}
B14	CLKA	CLKA
B15	NC*	I/O
B16	NC*	I/O
B17	I/O	I/O
B18	V_{CCI}	V_{CCI}
B19	I/O	I/O
B20	I/O	I/O
B21	NC*	I/O
B22	NC*	I/O
B23	NC*	I/O
B24	NC*	I/O
B25	I/O	I/O
B26	NC*	NC
C1	NC*	I/O
C2	NC*	I/O
C3	NC*	I/O
C4	NC*	I/O
C5	I/O	I/O
C6	V_{CCI}	V_{CCI}
C7	I/O	I/O
C8	I/O	I/O
C9	V_{CCI}	V_{CCI}
C10	I/O	I/O
C11	I/O	I/O
C12	I/O	I/O
C13	PRA, I/O	PRA, I/O
C14	I/O	I/O
C15	I/O	QCLKD
C16	I/O	I/O
C17	I/O	I/O
C18	I/O	I/O

Note: *These pins must be left floating on the A54SX32A device.

484-Pin FBGA		
Pin Number	A54SX32A Function	A54SX72A Function
T3	I/O	I/O
T4	I/O	I/O
T5	I/O	I/O
T10	GND	GND
T11	GND	GND
T12	GND	GND
T13	GND	GND
T14	GND	GND
T15	GND	GND
T16	GND	GND
T17	GND	GND
T22	I/O	I/O
T23	I/O	I/O
T24	I/O	I/O
T25	NC*	I/O
T26	NC*	I/O
U1	I/O	I/O
U2	V_{CCI}	V_{CCI}
U3	I/O	I/O
U4	I/O	I/O
U5	I/O	I/O
U10	GND	GND
U11	GND	GND
U12	GND	GND
U13	GND	GND
U14	GND	GND
U15	GND	GND
U16	GND	GND
U17	GND	GND
U22	I/O	I/O
U23	I/O	I/O
U24	I/O	I/O
U25	V_{CCI}	V_{CCI}
U26	I/O	I/O
V1	NC*	I/O

484-Pin FBGA		
Pin Number	A54SX32A Function	A54SX72A Function
V2	NC*	I/O
V3	I/O	I/O
V4	I/O	I/O
V5	I/O	I/O
V22	V_{CCA}	V_{CCA}
V23	I/O	I/O
V24	I/O	I/O
V25	NC*	I/O
V26	NC*	I/O
W1	I/O	I/O
W2	I/O	I/O
W3	I/O	I/O
W4	I/O	I/O
W5	I/O	I/O
W22	I/O	I/O
W23	V_{CCA}	V_{CCA}
W24	I/O	I/O
W25	NC*	I/O
W26	NC*	I/O
Y1	NC*	I/O
Y2	NC*	I/O
Y3	I/O	I/O
Y4	I/O	I/O
Y5	NC*	I/O
Y22	I/O	I/O
Y23	I/O	I/O
Y24	V_{CCI}	V_{CCI}
Y25	I/O	I/O
Y26	I/O	I/O

Note: *These pins must be left floating on the A54SX32A device.