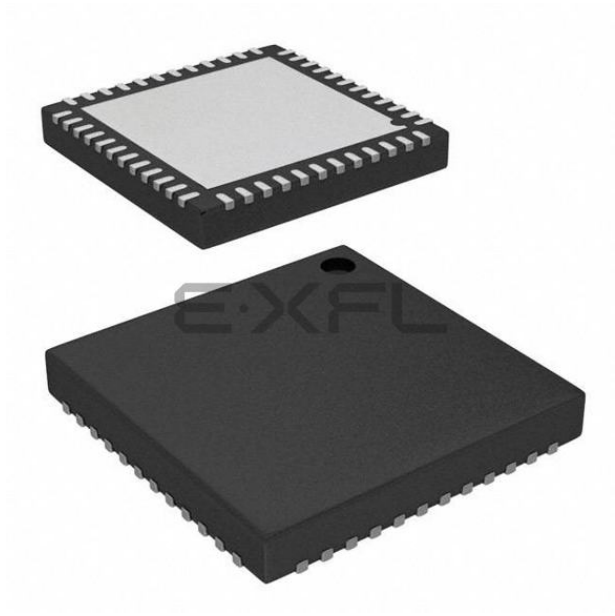

Welcome to E-XFL.COM

What is "Embedded - Microcontrollers"?

"Embedded - Microcontrollers" refer to small, integrated circuits designed to perform specific tasks within larger systems. These microcontrollers are essentially compact computers on a single chip, containing a processor core, memory, and programmable input/output peripherals. They are called "embedded" because they are embedded within electronic devices to control various functions, rather than serving as standalone computers. Microcontrollers are crucial in modern electronics, providing the intelligence and control needed for a wide range of applications.

Applications of "Embedded - Microcontrollers"

Details	
Product Status	Active
Core Processor	ARM® Cortex®-M0+
Core Size	32-Bit Single-Core
Speed	40MHz
Connectivity	CSIO, I²C, LINbus, UART/USART, USB
Peripherals	I²S, LVD, POR, PWM, WDT
Number of I/O	38
Program Memory Size	64KB (64K x 8)
Program Memory Type	FLASH
EEPROM Size	-
RAM Size	12K x 8
Voltage - Supply (Vcc/Vdd)	1.65V ~ 3.6V
Data Converters	A/D 8x12b
Oscillator Type	Internal
Operating Temperature	-40°C ~ 105°C (TA)
Mounting Type	Surface Mount
Package / Case	48-WFQFN Exposed Pad
Supplier Device Package	48-QFN (7x7)
Purchase URL	https://www.e-xfl.com/product-detail/infineon-technologies/s6e1c31c0agn20000

Table of Contents

Features **1**
1. Product Lineup **6**
2. Packages **7**
3. Pin Assignment **8**
4. List of Pin Functions **15**
5. I/O Circuit Type **28**
6. Handling Precautions **33**
6.1 Precautions for Product Design 33
6.2 Precautions for Package Mounting 34
6.3 Precautions for Use Environment 36
7. Handling Devices **37**
8. Block Diagram **40**
9. Memory Map **41**
10. Pin Status in Each CPU State **44**
11. Electrical Characteristics **47**
11.1 Absolute Maximum Ratings 47
11.2 Recommended Operating Conditions 48
11.3 DC Characteristics 49
11.3.1 Current Rating 49
11.3.2 Pin Characteristics 54
11.4 AC Characteristics 55
11.4.1 Main Clock Input Characteristics 55
11.4.2 Sub Clock Input Characteristics 56
11.4.3 Built-in CR Oscillation Characteristics 57
11.4.4 Operating Conditions of Main PLL (In the Case of Using the Main Clock as the Input Clock of the PLL) 58
11.4.5 Operating Conditions of Main PLL (In the Case of Using the Built-in High-Speed CR Clock as the Input Clock of the Main PLL) 58
11.4.6 Reset Input Characteristics 59
11.4.7 Power-on Reset Timing 59
11.4.8 Base Timer Input Timing 60
11.4.9 CSIO/SPI/UART Timing 61
11.4.10 External Input Timing 78
11.4.11 I^2C Timing / I2C Slave Timing 79
11.4.12 I^2S Timing (MFS-I2S Timing) 80
11.4.13 Smart Card Interface Characteristics 82
11.4.14 SW-DP Timing 83
11.5 12-bit A/D Converter 84
11.6 USB Characteristics 87
11.7 Low-Voltage Detection Characteristics 92
11.7.1 Low-Voltage Detection Reset 92
11.7.2 Low-Voltage Detection Interrupt 93
11.8 Flash Memory Write/Erase Characteristics 94
11.9 Return Time from Low-Power Consumption Mode 95
11.9.1 Return Factor: Interrupt/WKUP 95
11.9.2 Return Factor: Reset 97
12. Ordering Information **99**
13. Package Dimensions **100**
Document History **106**

í Low- 6 S H H G / R D G 8 S V W U H D P I 3 R U W F R D G

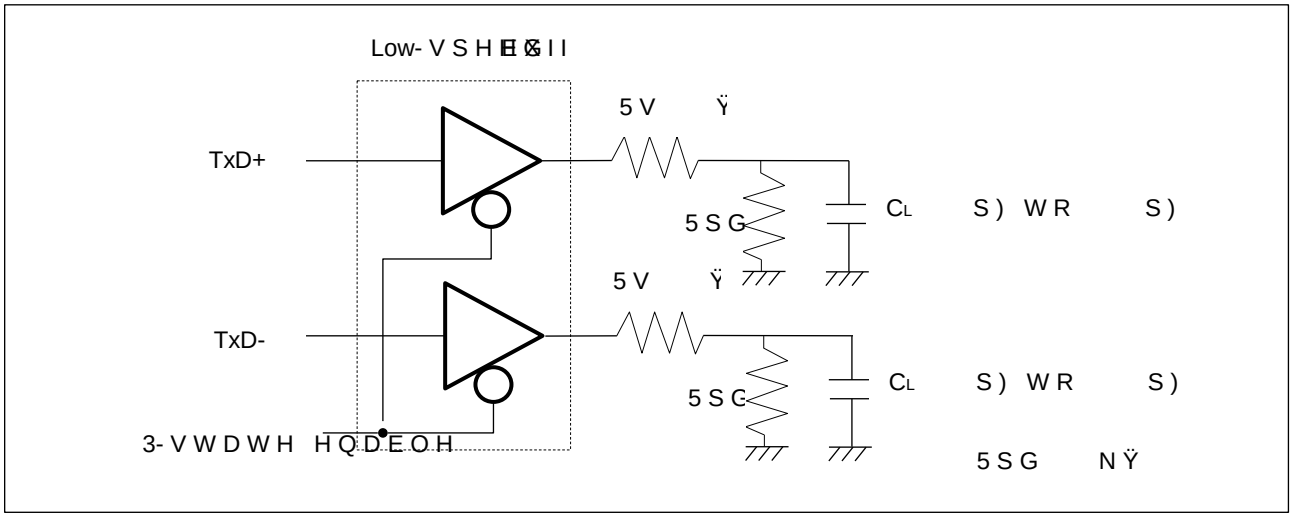

í Low- 6 S H H G / R D G ' R Z Q V W U H D P I 3 R U W F R D G

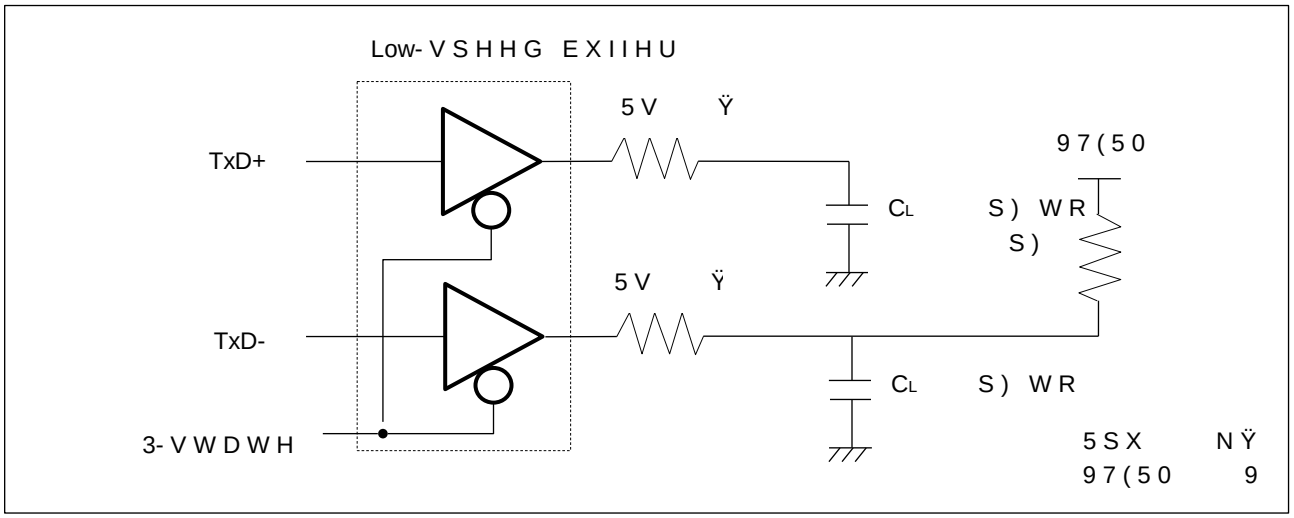

11.7.2 Low-Voltage Detection Interrupt

T_A - °C to + °C

Parameter	Symbol	Conditions	Value			Unit	Remarks
			Min	Typ	Max		
'HWHFWHG YRO	9'/	69+,				9	:KHQ YROWDJH GUR
5HOHDVHG YRO	9'+					9	:KHQ YROWDJH ULV
'HWHFWHG YRO	9'/	69+,				9	:KHQ YROWDJH GUR
5HOHDVHG YRO	9'+					9	:KHQ YROWDJH ULV
'HWHFWHG YRO	9'/	69+,				9	:KHQ YROWDJH GUR
5HOHDVHG YRO	9'+				2.00	9	:KHQ YROWDJH ULV
'HWHFWHG YRO	9'/	69+,			2.00	9	:KHQ YROWDJH GUR
5HOHDVHG YRO	9'+					9	:KHQ YROWDJH ULV
'HWHFWHG YRO	9'/	69+,				9	:KHQ YROWDJH GUR
5HOHDVHG YRO	9'+					9	:KHQ YROWDJH ULV
'HWHFWHG YRO	9'/	69+,				9	:KHQ YROWDJH GUR
5HOHDVHG YRO	9'+			2.00		9	:KHQ YROWDJH ULV
'HWHFWHG YRO	9'/	69+,		2.00		9	:KHQ YROWDJH GUR
5HOHDVHG YRO	9'+					9	:KHQ YROWDJH ULV
'HWHFWHG YRO	9'/	69+,				9	:KHQ YROWDJH GUR
5HOHDVHG YRO	9'+					9	:KHQ YROWDJH ULV
'HWHFWHG YRO	9'/	69+,	2.30			9	:KHQ YROWDJH GUR
5HOHDVHG YRO	9'+			2.60		9	:KHQ YROWDJH ULV
'HWHFWHG YRO	9'/	69+,		2.60		9	:KHQ YROWDJH GUR
5HOHDVHG YRO	9'+					9	:KHQ YROWDJH ULV
'HWHFWHG YRO	9'/	69+,				9	:KHQ YROWDJH GUR
5HOHDVHG YRO	9'+				3.02	9	:KHQ YROWDJH ULV
'HWHFWHG YRO	9'/	69+,			3.02	9	:KHQ YROWDJH GUR
5HOHDVHG YRO	9'+					9	:KHQ YROWDJH ULV
'HWHFWHG YRO	9'/	69+,				9	:KHQ YROWDJH GUR
5HOHDVHG YRO	9'+			3.00		9	:KHQ YROWDJH ULV
'HWHFWHG YRO	9'/	69+,		3.00		9	:KHQ YROWDJH GUR
5HOHDVHG YRO	9'+					9	:KHQ YROWDJH ULV
'HWHFWHG YRO	9'/	69+,				9	:KHQ YROWDJH GUR
5HOHDVHG YRO	9'+			3.20		9	:KHQ YROWDJH ULV
'HWHFWHG YRO	9'/	69+,		3.20		9	:KHQ YROWDJH GUR
5HOHDVHG YRO	9'+			3.30		9	:KHQ YROWDJH ULV
/9' VWDELOL]DWLRQ ZDLW WLPH	$T_{/9':}$	-	-	-	î $t_{\&<\&3}$*	V	
/9' GHWHFWLRQ WLPH	$T_{/9'DL}$	-	-	-	200	V	

$t_{\&<\&3}$ UHSUHVHQWVEXWKHORFN F\FOH WLPH

11.9.2 Return Factor: Reset

7KH UHWXUQ W-3PHZ HU FRQVXPSWLRQ PRGH LV LQGLFDWHG DV IROORZV ,W LV IURP
RSHUDWLRQ

Return Count Time

9CC 9 WR 9, TA - °C to + °C

Parameter		Symbol	Value		Unit	Remarks
Current Mode	Mode to return		Typ	Max*		
+LJK VSHHG &5 6OHH 0DLQ 6OHHS PRGH 3// 6OHHS PRGH	+LJK VSHHG &5 7LPHU PRGH 0DLQ 7LPHU PRGH 3// 7LPHU PRGH	$t_{5\&17}$	20	22	V	:KHQ +LJK VSHHG &5 LV HQDEOH
Low-VSHHG &5 6OHHS PRGH					V	:KHQ +LJK VSHHG &5 LV HQDEOH
6XE 6OHHS PRGH					V	:KHQ +LJK VSHHG &5 LV HQDEOH
+LJK VSHHG &5 7LPHU PRGH 0DLQ 7LPHU PRGH 3// 7LPHU PRGH			20	22	V	:KHQ +LJK VSHHG &5 LV HQDEOH
Low-VSHHG &5 7LPHU PRGH					V	
6XE 7LPHU PRGH					V	
6WRS PRGH 57& PRGH					V	
'HHS 6WDQGE\ 57& P 'HHS 6WDQGE\ 6WRS					V	

7KH PD[LPXP YDOXH GHSHQGV-iRQ.WKH DFFXUDF\ RI EXLOW
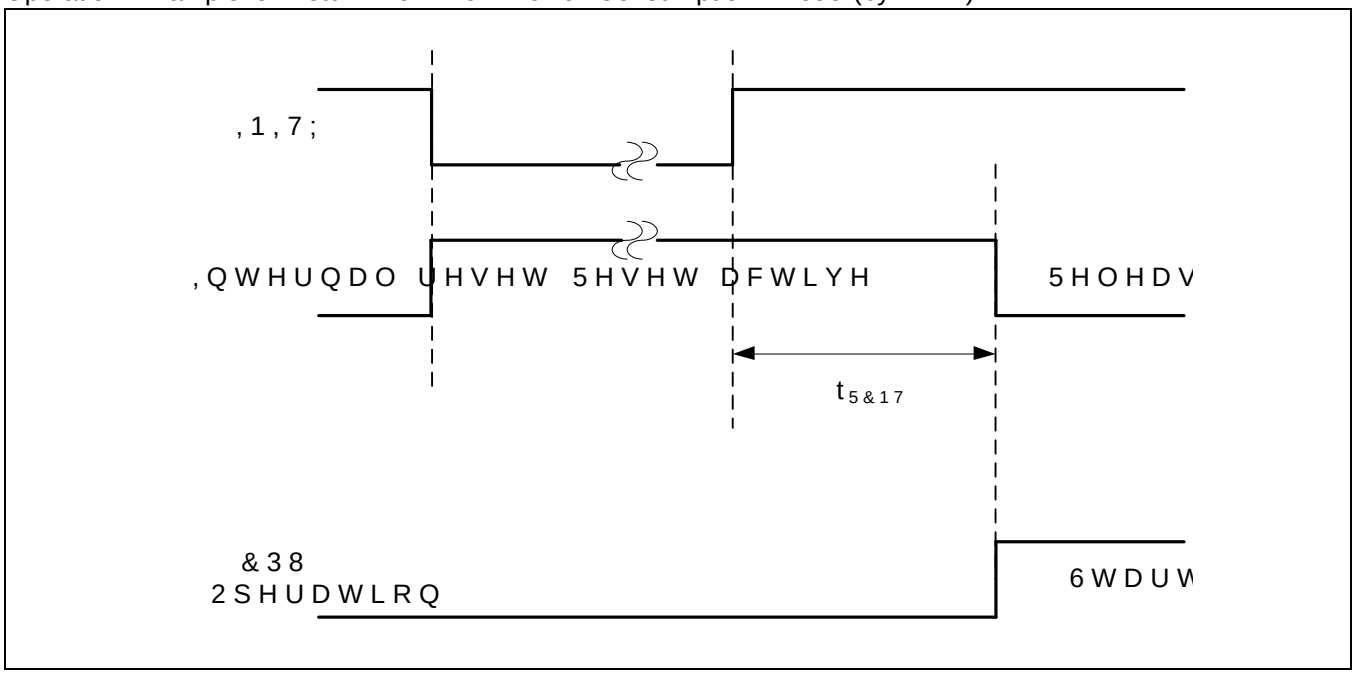
Operation Example of Return from Low-Power Consumption Mode (by INITX)