Lattice Semiconductor Corporation - LFXP10C-4FN256C Datasheet

Welcome to E-XFL.COM

Understanding Embedded - FPGAs (Field Programmable Gate Array)

Embedded - FPGAs, or Field Programmable Gate Arrays, are advanced integrated circuits that offer unparalleled flexibility and performance for digital systems. Unlike traditional fixed-function logic devices, FPGAs can be programmed and reprogrammed to execute a wide array of logical operations, enabling customized functionality tailored to specific applications. This reprogrammability allows developers to iterate designs quickly and implement complex functions without the need for custom hardware.

Applications of Embedded - FPGAs

The versatility of Embedded - FPGAs makes them indispensable in numerous fields. In telecommunications.

Details	
Product Status	Obsolete
Number of LABs/CLBs	-
Number of Logic Elements/Cells	10000
Total RAM Bits	221184
Number of I/O	188
Number of Gates	-
Voltage - Supply	1.71V ~ 3.465V
Mounting Type	Surface Mount
Operating Temperature	0°C ~ 85°C (TJ)
Package / Case	256-BGA
Supplier Device Package	256-FPBGA (17x17)
Purchase URL	https://www.e-xfl.com/product-detail/lattice-semiconductor/lfxp10c-4fn256c

LatticeXP Family Data Sheet
Architecture

July 2007 Data Sheet DS1001

Architecture Overview

The LatticeXP architecture contains an array of logic blocks surrounded by Programmable I/O Cells (PIC). Interspersed between the rows of logic blocks are rows of sysMEM Embedded Block RAM (EBR) as shown in Figure 2-1.

On the left and right sides of the PFU array, there are Non-volatile Memory Blocks. In configuration mode this non-volatile memory is programmed via the IEEE 1149.1 TAP port or the sysCONFIG™ peripheral port. On power up, the configuration data is transferred from the Non-volatile Memory Blocks to the configuration SRAM. With this technology, expensive external configuration memories are not required and designs are secured from unauthorized read-back. This transfer of data from non-volatile memory to configuration SRAM via wide busses happens in microseconds, providing an “instant-on” capability that allows easy interfacing in many applications.

There are two kinds of logic blocks, the Programmable Functional Unit (PFU) and Programmable Functional unit without RAM/ROM (PFF). The PFU contains the building blocks for logic, arithmetic, RAM, ROM and register functions. The PFF block contains building blocks for logic, arithmetic and ROM functions. Both PFU and PFF blocks are optimized for flexibility, allowing complex designs to be implemented quickly and efficiently. Logic Blocks are arranged in a two-dimensional array. Only one type of block is used per row. The PFU blocks are used on the outside rows. The rest of the core consists of rows of PFF blocks interspersed with rows of PFU blocks. For every three rows of PFF blocks there is a row of PFU blocks.

Each PIC block encompasses two PIOs (PIO pairs) with their respective sysIO interfaces. PIO pairs on the left and right edges of the device can be configured as LVDS transmit/receive pairs. sysMEM EBRs are large dedicated fast memory blocks. They can be configured as RAM or ROM.

The PFU, PFF, PIC and EBR Blocks are arranged in a two-dimensional grid with rows and columns as shown in Figure 2-1. The blocks are connected with many vertical and horizontal routing channel resources. The place and route software tool automatically allocates these routing resources.

At the end of the rows containing the sysMEM Blocks are the sysCLOCK Phase Locked Loop (PLL) Blocks. These PLLs have multiply, divide and phase shifting capability; they are used to manage the phase relationship of the clocks. The LatticeXP architecture provides up to four PLLs per device.

Every device in the family has a JTAG Port with internal Logic Analyzer (ispTRACY) capability. The sysCONFIG port which allows for serial or parallel device configuration. The LatticeXP devices are available for operation from 3.3V, 2.5V, 1.8V and 1.2V power supplies, providing easy integration into the overall system.

© 2007 Lattice Semiconductor Corp. All Lattice trademarks, registered trademarks, patents, and disclaimers are as listed at www.latticesemi.com/legal. All other brand or product names are trademarks or registered trademarks of their respective holders. The specifications and information herein are subject to change without notice.

For more information on the PLL, please see details of additional technical documentation at the end of this data sheet.

Dynamic Clock Select (DCS)

The DCS is a global clock buffer with smart multiplexer functions. It takes two independent input clock sources and outputs a clock signal without any glitches or runt pulses. This is achieved irrespective of where the select signal is toggled. There are eight DCS blocks per device, located in pairs at the center of each side. Figure 2-12 illustrates the DCS Block Macro.

Figure 2-12. DCS Block Primitive

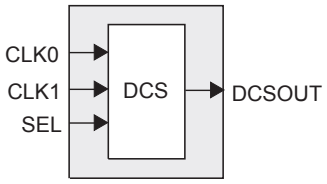

Figure 2-13 shows timing waveforms of the default DCS operating mode. The DCS block can be programmed to other modes. For more information on the DCS, please see details of additional technical documentation at the end of this data sheet.

Figure 2-13. DCS Waveforms

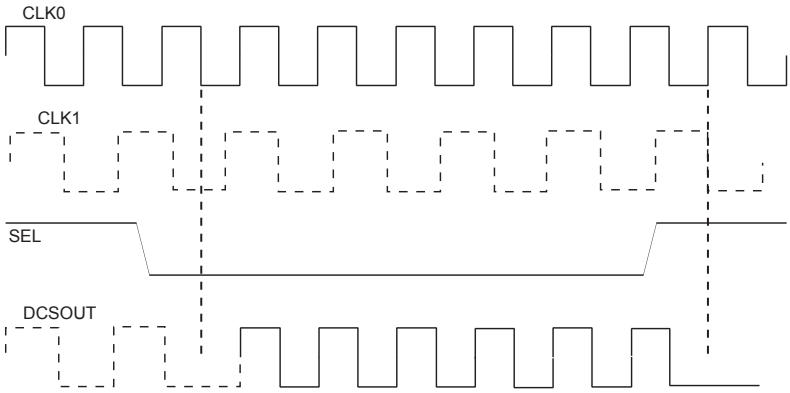

sysMEM Memory

The LatticeXP family of devices contain a number of sysMEM Embedded Block RAM (EBR). The EBR consists of a 9-Kbit RAM, with dedicated input and output registers.

sysMEM Memory Block

The sysMEM block can implement single port, dual port or pseudo dual port memories. Each block can be used in a variety of depths and widths as shown in Table 2-6.

Figure 2-15. Memory Core Reset

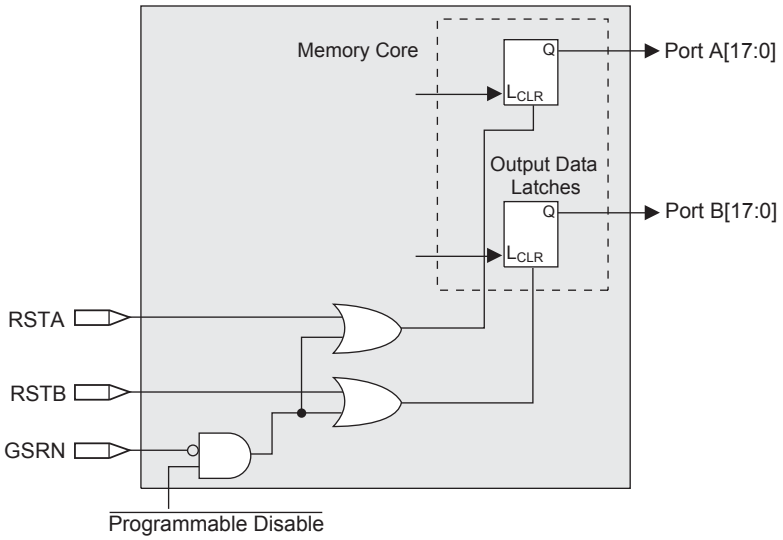

For further information on sysMEM EBR block, see the details of additional technical documentation at the end of this data sheet.

EBR Asynchronous Reset

EBR asynchronous reset or GSR (if used) can only be applied if all clock enables are low for a clock cycle before the reset is applied and released a clock cycle after the reset is released, as shown in Figure 2-16. The GSR input to the EBR is always asynchronous.

Figure 2-16. EBR Asynchronous Reset (Including GSR) Timing Diagram

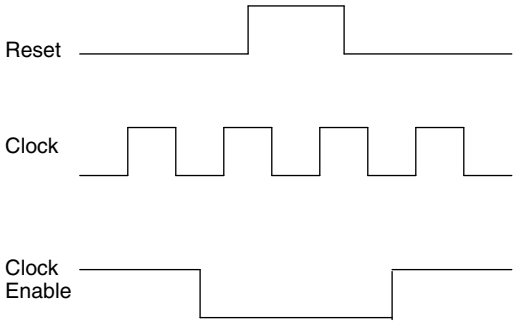

If all clock enables remain enabled, the EBR asynchronous reset or GSR may only be applied and released after the EBR read and write clock inputs are in a steady state condition for a minimum of $1/f_{MAX}$ (EBR clock). The reset release must adhere to the EBR synchronous reset setup time before the next active read or write clock edge.

If an EBR is pre-loaded during configuration, the GSR input must be disabled or the release of the GSR during device Wake Up must occur before the release of the device I/Os becoming active.

These instructions apply to all EBR RAM and ROM implementations.

Note that there are no reset restrictions if the EBR synchronous reset is used and the EBR GSR input is disabled.

Programmable I/O Cells (PICs)

Each PIC contains two PIOs connected to their respective sysIO Buffers which are then connected to the PADs as shown in Figure 2-17. The PIO Block supplies the output data (DO) and the Tri-state control signal (TO) to sysIO buffer, and receives input from the buffer.

Figure 2-23. Output Register Block

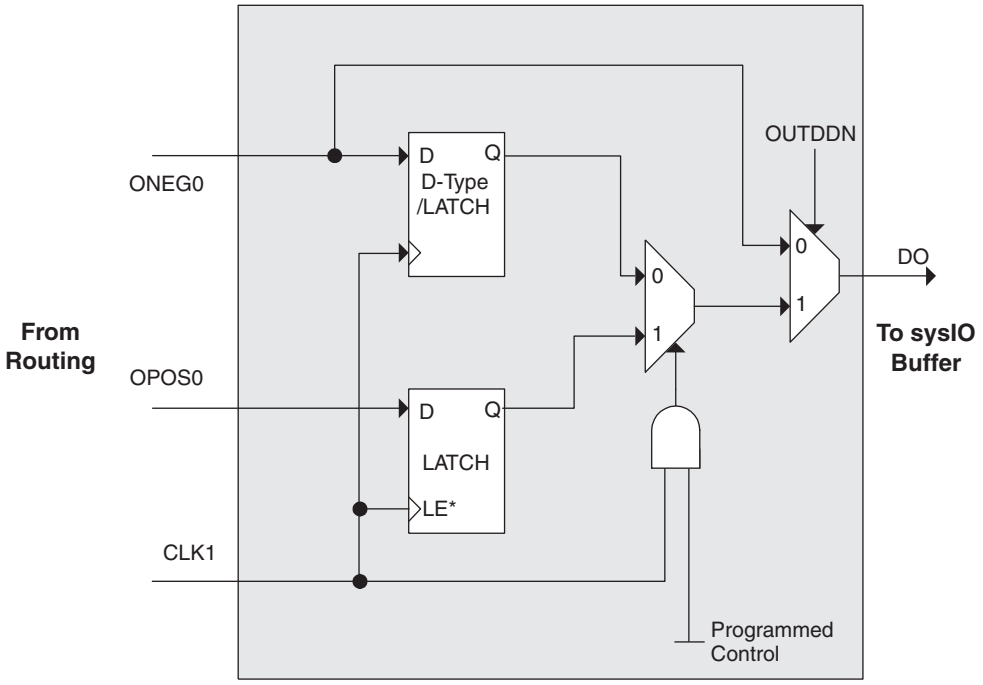

*Latch is transparent when input is low.

Figure 2-24. ODDRXB Primitive

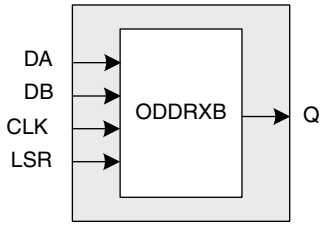

Tristate Register Block

The tristate register block provides the ability to register tri-state control signals from the core of the device before they are passed to the sysIO buffers. The block contains a register for SDR operation and an additional latch for DDR operation. Figure 2-25 shows the diagram of the Tristate Register Block.

In SDR mode, ONEG1 feeds one of the flip-flops that then feeds the output. The flip-flop can be configured a D-type or latch. In DDR mode, ONEG1 is fed into one register on the positive edge of the clock and OPOS1 is latched. A multiplexer running off the same clock selects the correct register for feeding to the output (D0).

Table 2-8. Supported Output Standards

Output Standard	Drive	V_{CCIO} (Nom.)
Single-ended Interfaces		
LVTTL	4mA, 8mA, 12mA, 16mA, 20mA	3.3
LVCMOS33	4mA, 8mA, 12mA 16mA, 20mA	3.3
LVCMOS25	4mA, 8mA, 12mA 16mA, 20mA	2.5
LVCMOS18	4mA, 8mA, 12mA 16mA	1.8
LVCMOS15	4mA, 8mA	1.5
LVCMOS12	2mA, 6mA	1.2
LVCMOS33, Open Drain	4mA, 8mA, 12mA 16mA, 20mA	—
LVCMOS25, Open Drain	4mA, 8mA, 12mA 16mA, 20mA	—
LVCMOS18, Open Drain	4mA, 8mA, 12mA 16mA	—
LVCMOS15, Open Drain	4mA, 8mA	—
LVCMOS12, Open Drain	2mA. 6mA	—
PCI33	N/A	3.3
HSTL18 Class I, II, III	N/A	1.8
HSTL15 Class I, III	N/A	1.5
SSTL3 Class I, II	N/A	3.3
SSTL2 Class I, II	N/A	2.5
SSTL18 Class I	N/A	1.8
Differential Interfaces		
Differential SSTL3, Class I, II	N/A	3.3
Differential SSTL2, Class I, II	N/A	2.5
Differential SSTL18, Class I	N/A	1.8
Differential HSTL18, Class I, II, III	N/A	1.8
Differential HSTL15, Class I, III	N/A	1.5
LVDS	N/A	2.5
BLVDS[1]	N/A	2.5
LVPECL[1]	N/A	3.3

1. Emulated with external resistors.

Hot Socketing

The LatticeXP devices have been carefully designed to ensure predictable behavior during power-up and power-down. Power supplies can be sequenced in any order. During power up and power-down sequences, the I/Os remain in tristate until the power supply voltage is high enough to ensure reliable operation. In addition, leakage into I/O pins is controlled to within specified limits, which allows easy integration with the rest of the system. These capabilities make the LatticeXP ideal for many multiple power supply and hot-swap applications.

Sleep Mode

The LatticeXP “C” devices (V_{CC} = 1.8/2.5/3.3V) have a sleep mode that allows standby current to be reduced by up to three orders of magnitude during periods of system inactivity. Entry and exit to Sleep Mode is controlled by the SLEEPN pin.

During Sleep Mode, the FPGA logic is non-operational, registers and EBR contents are not maintained and I/Os are tri-stated. Do not enter Sleep Mode during device programming or configuration operation. In Sleep Mode, power supplies can be maintained in their normal operating range, eliminating the need for external switching of power supplies. Table 2-9 compares the characteristics of Normal, Off and Sleep Modes.

Supply Current (Standby)[1, 2, 3, 4]

Over Recommended Operating Conditions

Symbol	Parameter	Device	Typ.[5]	Units
I_{CC}	Core Power Supply	LFXP3E	15	mA
		LFXP6E	20	mA
		LFXP10E	35	mA
		LFXP15E	45	mA
		LFXP20E	55	mA
		LFXP3C	35	mA
		LFXP6C	40	mA
		LFXP10C	70	mA
		LFXP15C	80	mA
		LFXP20C	90	mA
I_{CCP}	PLL Power Supply (per PLL)	All	8	mA
I_{CCAUX}	Auxiliary Power Supply V_{CCAUX} = 3.3V	LFXP3E/C	22	mA
		LFXP6E/C	22	mA
		LFXP10E/C	30	mA
		LFXP15E/C	30	mA
		LFXP20E/C	30	mA
I_{CCIO}	Bank Power Supply[6]	All	2	mA
I_{CCJ}	V_{CCJ} Power Supply	All	1	mA

1. For further information on supply current, please see details of additional technical documentation at the end of this data sheet.
2. Assumes all outputs are tristated, all inputs are configured as LVCMOS and held at the VCCIO or GND.
3. Frequency 0MHz.
4. User pattern: blank.
5. T_A=25°C, power supplies at nominal voltage.
6. Per bank.

Initialization Supply Current[1, 2, 3, 4, 5, 6]

Over Recommended Operating Conditions

Symbol	Parameter	Device	Typ.[7]	Units
I_{CC}	Core Power Supply	LFXP3E	40	mA
		LFXP6E	50	mA
		LFXP10E	110	mA
		LFXP15E	140	mA
		LFXP20E	250	mA
		LFXP3C	60	mA
		LFXP6C	70	mA
		LFXP10C	150	mA
		LFXP15C	180	mA
		LFXP20C	290	mA
I_{CCAUX}	Auxiliary Power Supply V_{CCAUX} = 3.3V	LFXP3E/C	50	mA
		LFXP6E/C	60	mA
		LFXP10E/C	90	mA
		LFXP15 /C	110	mA
		LFXP20E/C	130	mA
I_{CCJ}	V_{CCJ} Power Supply	All	2	mA

1. Until DONE signal is active.
2. For further information on supply current, please see details of additional technical documentation at the end of this data sheet.
3. Assumes all outputs are tristated, all inputs are configured as LVCMOS and held at the V_{CCIO} or GND.
4. Frequency 0MHz.
5. Typical user pattern.
6. Assume normal bypass capacitor/decoupling capacitor across the supply.
7. T_A=25°C, power supplies at nominal voltage.

Programming and Erase Flash Supply Current[1, 2, 3, 4, 5]

Symbol	Parameter	Device	Typ[6]	Units
I_{CC}	Core Power Supply	LFXP3E	30	mA
		LFXP6E	40	mA
		LFXP10E	50	mA
		LFXP15E	60	mA
		LFXP20E	70	mA
		LFXP3C	50	mA
		LFXP6C	60	mA
		LFXP10C	90	mA
		LFXP15C	100	mA
		LFXP20C	110	mA
I_{CCAUX}	Auxiliary Power Supply V_{CCAUX} = 3.3V	LFXP3E/C	50	mA
		LFXP6E/C	60	mA
		LFXP10E/C	90	mA
		LFXP15E/C	110	mA
		LFXP20E/C	130	mA
I_{CCJ}	V_{CCJ} Power Supply[7]	All	2	mA

1. For further information on supply current, please see details of additional technical documentation at the end of this data sheet.
2. Assumes all outputs are tristated, all inputs are configured as LVCMOS and held at the V_{CCIO} or GND.
3. Blank user pattern; typical Flash pattern.
4. Bypass or decoupling capacitor across the supply.
5. JTAG programming is at 1MHz.
6. T_A=25°C, power supplies at nominal voltage.
7. When programming via JTAG.

sysIO Single-Ended DC Electrical Characteristics

Input/Output Standard	V_{IL}		V_{IH}		V_{OL} Max. (V)	V_{OH} Min. (V)	I_{OL} (mA)	I_{OH} (mA)
	Min. (V)	Max. (V)	Min. (V)	Max. (V)				
LVCMOS 3.3	-0.3	0.8	2.0	3.6	0.4	V_{CCIO} - 0.4	20, 16, 12, 8, 4	-20, -16, -12, -8, -4
					0.2	V_{CCIO} - 0.2	0.1	-0.1
LVTTL	-0.3	0.8	2.0	3.6	0.4	V_{CCIO} - 0.4	20, 16, 12, 8, 4	-20, -16, -12, -8, -4
					0.2	V_{CCIO} - 0.2	0.1	-0.1
LVCMOS 2.5	-0.3	0.7	1.7	3.6	0.4	V_{CCIO} - 0.4	20, 16, 12, 8, 4	-20, -16, -12, -8, -4
					0.2	V_{CCIO} - 0.2	0.1	-0.1
LVCMOS 1.8	-0.3	$0.35V_{CCIO}$	$0.65V_{CCIO}$	3.6	0.4	V_{CCIO} - 0.4	16, 12, 8, 4	-16, -12, -8, -4
					0.2	V_{CCIO} - 0.2	0.1	-0.1
LVCMOS 1.5	-0.3	$0.35V_{CCIO}$	$0.65V_{CCIO}$	3.6	0.4	V_{CCIO} - 0.4	8, 4	-8, -4
					0.2	V_{CCIO} - 0.2	0.1	-0.1
LVCMOS 1.2 (“C” Version)	-0.3	0.42	0.78	3.6	0.4	V_{CCIO} - 0.4	6, 2	-6, -2
					0.2	V_{CCIO} - 0.2	0.1	-0.1
LVCMOS 1.2 (“E” Version)	-0.3	$0.35V_{CC}$	$0.65V_{CC}$	3.6	0.4	V_{CCIO} - 0.4	6, 2	-6, -2
					0.2	V_{CCIO} - 0.2	0.1	-0.1
PCI	-0.3	$0.3V_{CCIO}$	$0.5V_{CCIO}$	3.6	$0.1V_{CCIO}$	$0.9V_{CCIO}$	1.5	-0.5
SSTL3 class I	-0.3	V_{REF} - 0.2	V_{REF} + 0.2	3.6	0.7	V_{CCIO} - 1.1	8	-8
SSTL3 class II	-0.3	V_{REF} - 0.2	V_{REF} + 0.2	3.6	0.5	V_{CCIO} - 0.9	16	-16
SSTL2 class I	-0.3	V_{REF} - 0.18	V_{REF} + 0.18	3.6	0.54	V_{CCIO} - 0.62	7.6	-7.6
SSTL2 class II	-0.3	V_{REF} - 0.18	V_{REF} + 0.18	3.6	0.35	V_{CCIO} - 0.43	15.2	-15.2
SSTL18 class I	-0.3	V_{REF} - 0.125	V_{REF} + 0.125	3.6	0.4	V_{CCIO} - 0.4	6.7	-6.7
HSTL15 class I	-0.3	V_{REF} - 0.1	V_{REF} + 0.1	3.6	0.4	V_{CCIO} - 0.4	8	-8
HSTL15 class III	-0.3	V_{REF} - 0.1	V_{REF} + 0.1	3.6	0.4	V_{CCIO} - 0.4	24	-8
HSTL18 class I	-0.3	V_{REF} - 0.1	V_{REF} + 0.1	3.6	0.4	V_{CCIO} - 0.4	9.6	-9.6
HSTL18 class II	-0.3	V_{REF} - 0.1	V_{REF} + 0.1	3.6	0.4	V_{CCIO} - 0.4	16	-16
HSTL18 class III	-0.3	V_{REF} - 0.1	V_{REF} + 0.1	3.6	0.4	V_{CCIO} - 0.4	24	-8

1. The average DC current drawn by I/Os between GND connections, or between the last GND in an I/O bank and the end of an I/O bank, as shown in the logic signal connections table shall not exceed n * 8mA. Where n is the number of I/Os between bank GND connections or between the last GND in a bank and the end of a bank.

Figure 3-5. DDR Timings

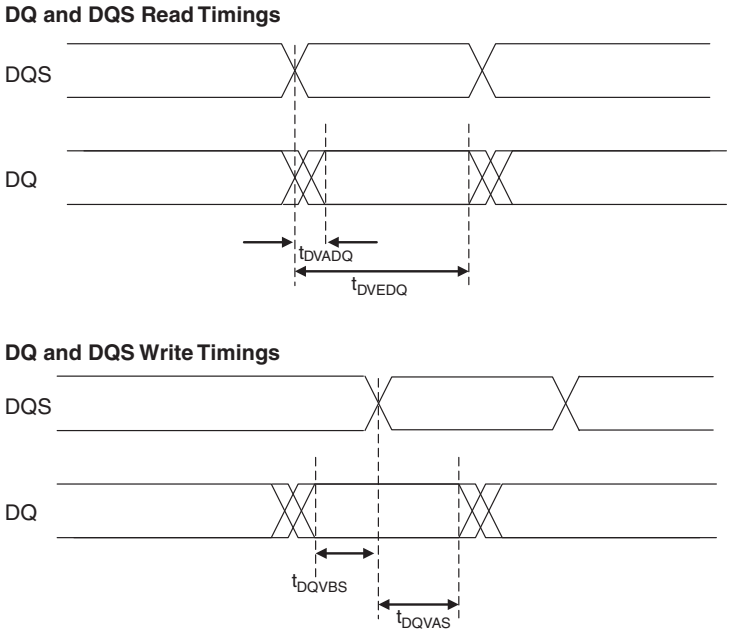

Pin Information Summary[1]

Pin Type		XP3			XP6		
		100 TQFP	144 TQFP	208 PQFP	144 TQFP	208 PQFP	256 fpBGA
Single Ended User I/O		62	100	136	100	142	188
Differential Pair User I/O[2]		19	35	56	35	58	80
Configuration	Dedicated	11	11	11	11	11	11
	Muxed	14	14	14	14	14	14
TAP		5	5	5	5	5	5
Dedicated (total without supplies)		6	6	6	6	6	6
V_{CC}		2	4	8	4	8	8
V_{CCAUX}		2	2	2	2	2	4
V_{CCPLL}		2	2	2	2	2	2
V_{CCIO}	Bank0	1	1	2	1	2	2
	Bank1	1	1	2	1	2	2
	Bank2	1	1	2	1	2	2
	Bank3	1	1	2	1	2	2
	Bank4	1	2	2	2	2	2
	Bank5	1	1	2	1	2	2
	Bank6	1	1	2	1	2	2
	Bank7	1	1	2	1	2	2
GND		10	13	24	13	24	24
GND_{PLL}		2	2	2	2	2	2
NC		0	0	6	0	0	0
Single Ended/Differential I/O per Bank[2]	Bank0	8/2	12/3	20/8	12/3	20/8	26/11
	Bank1	9/0	12/2	18/6	12/2	18/6	26/11
	Bank2	8/3	12/5	14/6	12/5	17/7	21/9
	Bank3	6/2	13/5	14/6	13/5	14/6	21/9
	Bank4	5/2	14/6	21/9	14/6	21/9	26/11
	Bank5	12/4	12/4	21/9	12/4	21/9	26/11
	Bank6	4/2	13/5	14/6	13/5	17/7	21/9
	Bank7	10/4	12/5	14/6	12/5	14/6	21/9
V_{CCJ}		1	1	1	1	1	1

1. During configuration the user-programmable I/Os are tri-stated with an internal pull-up resistor enabled. If any pin is not used (or not bonded to a package pin), it is also tri-stated with an internal pull-up resistor enabled after configuration.
2. The differential I/O per bank includes both dedicated LVDS and emulated LVDS pin pairs. Please see the Logic Signal Connections table for more information.

Pin Information Summary[1] (Cont.)

Pin Type		XP10		XP15			XP20		
		256 fpBGA	388 fpBGA	256 fpBGA	388 fpBGA	484 fpBGA	256 fpBGA	388 fpBGA	484 fpBGA
Single Ended User I/O		188	244	188	268	300	188	268	340
Differential Pair User I/O[2]		76	104	76	112	128	76	112	144
Configuration	Dedicated	11	11	11	11	11	11	11	11
	Muxed	14	14	14	14	14	14	14	14
TAP		5	5	5	5	5	5	5	5
Dedicated (total without supplies)		6	6	6	6	6	6	6	6
V_{CC}		8	14	8	14	28	8	14	28
V_{CCAUX}		4	4	4	4	12	4	4	12
V_{CCPLL}		2	2	2	2	2	2	2	2
V_{CCIO}	Bank0	2	5	2	5	4	2	5	4
	Bank1	2	5	2	5	4	2	5	4
	Bank2	2	4	2	4	4	2	4	4
	Bank3	2	4	2	4	4	2	4	4
	Bank4	2	5	2	5	4	2	5	4
	Bank5	2	5	2	5	4	2	5	4
	Bank6	2	4	2	4	4	2	4	4
	Bank7	2	4	2	4	4	2	4	4
GND		24	50	24	50	56	24	50	56
GND_{PLL}		2	2	2	2	2	2	2	2
NC		0	24	0	0	40	0	0	0
Single Ended/ Differential I/O per Bank[2]	Bank0	26/11	33/14	26/11	39/16	40/17	26/11	39/16	47/20
	Bank1	26/11	33/14	26/11	39/16	40/17	26/11	39/16	47/20
	Bank2	21/8	28/12	21/8	28/12	35/15	21/8	28/12	38/16
	Bank3	21/8	28/12	21/8	28/12	35/15	21/8	28/12	38/16
	Bank4	26/11	33/14	26/11	39/16	40/17	26/11	39/16	47/20
	Bank5	26/11	33/14	26/11	39/16	40/17	26/11	39/16	47/20
	Bank6	21/8	28/12	21/8	28/12	35/15	21/8	28/12	38/16
	Bank7	21/8	28/12	21/8	28/12	35/15	21/8	28/12	38/16
V_{CCJ}		1	1	1	1	1	1	1	1

1. During configuration the user-programmable I/Os are tri-stated with an internal pull-up resistor enabled. If any pin is not used (or not bonded to a package pin), it is also tri-stated with an internal pull-up resistor enabled after configuration.
2. The differential I/O per bank includes both dedicated LVDS and emulated LVDS pin pairs. Please see the Logic Signal Connections table for more information.

LFXP3 & LFXP6 Logic Signal Connections: 144 TQFP (Cont.)

Pin Number	LFXP3				LFXP6			
	Pin Function	Bank	Differential	Dual Function	Pin Function	Bank	Differential	Dual Function
93	PR9A	2	T	PCLKT2_0	PR12A	2	T	PCLKT2_0
94	PR8B	2	C	RUM0_PLLC_IN_A	PR8B	2	C	RUM0_PLLC_IN_A
95	PR8A	2	T	RUM0_PLLT_IN_A	PR8A	2	T	RUM0_PLLT_IN_A
96	PR7B	2	C[3]	-	PR7B	2	C[3]	-
97	PR7A	2	T[3]	DQS	PR7A	2	T[3]	DQS
98	VCCIO2	2	-	-	VCCIO2	2	-	-
99	PR6B	2	-	VREF1_2	PR6B	2	-	VREF1_2
100	PR5A	2	-	VREF2_2	PR5A	2	-	VREF2_2
101	GNDIO2	2	-	-	GNDIO2	2	-	-
102	PR3B	2	C	RUM0_PLLC_FB_A	PR3B	2	C	RUM0_PLLC_FB_A
103	PR3A	2	T	RUM0_PLLT_FB_A	PR3A	2	T	RUM0_PLLT_FB_A
104	PR2B	2	C[3]	-	PR2B	2	C[3]	-
105	PR2A	2	T[3]	-	PR2A	2	T[3]	-
106	VCCAUX	-	-	-	VCCAUX	-	-	-
107	TDO	-	-	-	TDO	-	-	-
108	VCCJ	-	-	-	VCCJ	-	-	-
109	TDI	-	-	-	TDI	-	-	-
110	TMS	-	-	-	TMS	-	-	-
111	TCK	-	-	-	TCK	-	-	-
112	VCC	-	-	-	VCC	-	-	-
113	PT25A	1	-	VREF1_1	PT28A	1	-	VREF1_1
114	PT24A	1	-	-	PT27A	1	-	-
115	PT23A	1	-	D0	PT26A	1	-	D0
116	PT22B	1	C	D1	PT25B	1	C	D1
117	PT22A	1	T	VREF2_1	PT25A	1	T	VREF2_1
118	PT21A	1	-	D2	PT24A	1	-	D2
119	VCCIO1	1	-	-	VCCIO1	1	-	-
120	PT20B	1	-	D3	PT23B	1	-	D3
121	GNDIO1	1	-	-	GNDIO1	1	-	-
122	PT17A	1	-	D4	PT20A	1	-	D4
123	PT16A	1	-	D5	PT19A	1	-	D5
124	PT15B	1	C	D6	PT18B	1	C	D6
125	PT15A	1	T	-	PT18A	1	T	-
126	PT14B	1	-	D7	PT17B	1	-	D7
127	GND	-	-	-	GND	-	-	-
128	PT13B	0	C	BUSY	PT16B	0	C	BUSY
129	PT13A	0	T	CS1N	PT16A	0	T	CS1N
130	PT12B	0	C	PCLKC0_0	PT15B	0	C	PCLKC0_0
131	PT12A	0	T	PCLKT0_0	PT15A	0	T	PCLKT0_0
132	PT11B	0	C	-	PT14B	0	C	-
133	VCCIO0	0	-	-	VCCIO0	0	-	-
134	PT11A	0	T	DQS	PT14A	0	T	DQS
135	PT9A	0	-	DOUT	PT12A	0	-	DOUT
136	GNDIO0	0	-	-	GNDIO0	0	-	-
137	PT8A	0	-	WRITEN	PT11A	0	-	WRITEN
138	PT7A	0	-	VREF1_0	PT10A	0	-	VREF1_0

LFXP3 & LFXP6 Logic Signal Connections: 144 TQFP (Cont.)

Pin Number	LFXP3				LFXP6			
	Pin Function	Bank	Differential	Dual Function	Pin Function	Bank	Differential	Dual Function
139	PT6A	0	-	DI	PT9A	0	-	DI
140	PT5A	0	-	CSN	PT8A	0	-	CSN
141	PT3B	0	-	VREF2_0	PT6B	0	-	VREF2_0
142	CFG0	0	-	-	CFG0	0	-	-
143	CFG1	0	-	-	CFG1	0	-	-
144	DONE	0	-	-	DONE	0	-	-

1. Applies to LFXP “C” only.
2. Applies to LFXP “E” only.
3. Supports dedicated LVDS outputs.

LFXP10, LFXP15 & LFXP20 Logic Signal Connections: 388 fpBGA (Cont.)

	LFXP10				LFXP15				LFXP20			
Ball Number	Ball Function	Bank	Diff.	Dual Function	Ball Function	Bank	Diff.	Dual Function	Ball Function	Bank	Diff.	Dual Function
U1	PL25A	6	T	LLM0_PLLT_IN_A	PL29A	6	T	LLM0_PLLT_IN_A	PL33A	6	T	LLM0_PLLT_IN_A
T2	PL25B	6	C	LLM0_PLLC_IN_A	PL29B	6	C	LLM0_PLLC_IN_A	PL33B	6	C	LLM0_PLLC_IN_A
V1	PL26A	6	T[3]	-	PL30A	6	T[3]	-	PL34A	6	T[3]	-
U2	PL26B	6	C[3]	-	PL30B	6	C[3]	-	PL34B	6	C[3]	-
W1	PL28A	6	T[3]	-	PL32A	6	T[3]	-	PL36A	6	T[3]	-
V2	PL28B	6	C[3]	-	PL32B	6	C[3]	-	PL36B	6	C[3]	-
-	GNDIO6	6	-	-	GNDIO6	-	-	-	GNDIO6	6	-	-
P3	PL29A	6	T	-	PL33A	6	T	-	PL37A	6	T	-
P4	PL29B	6	C	-	PL33B	6	C	-	PL37B	6	C	-
Y1	PL30A	6	T[3]	-	PL34A	6	T[3]	-	PL38A	6	T[3]	-
W2	PL30B	6	C[3]	-	PL34B	6	C[3]	-	PL38B	6	C[3]	-
R3	PL31A	6	-	VREF2_6	PL35A	6	-	VREF2_6	PL39A	6	-	VREF2_6
R4	PL32B	6	-	-	PL36B	6	-	-	PL40B	6	-	-
T3	PL33A	6	T[3]	DQS	PL37A	6	T[3]	DQS	PL41A	6	T[3]	DQS
T4	PL33B	6	C[3]	-	PL37B	6	C[3]	-	PL41B	6	C[3]	-
-	GNDIO6	6	-	-	GNDIO6	6	-	-	GNDIO6	6	-	-
V4	PL34A	6	T	LLM0_PLLT_FB_A	PL38A	6	T	LLM0_PLLT_FB_A	PL42A	6	T	LLM0_PLLT_FB_A
V3	PL34B	6	C	LLM0_PLLC_FB_A	PL38B	6	C	LLM0_PLLC_FB_A	PL42B	6	C	LLM0_PLLC_FB_A
U4	PL35A	6	T[3]	-	PL39A	6	T[3]	-	PL43A	6	T[3]	-
U3	PL35B	6	C[3]	-	PL39B	6	C[3]	-	PL43B	6	C[3]	-
-	GNDIO6	6	-	-	GNDIO6	6	-	-	GNDIO6	6	-	-
W5	SLEEPN[1]/ TOE[2]	-	-	-	SLEEPN[1]/ TOE[2]	-	-	-	SLEEPN[1]/ TOE[2]	-	-	-
Y2	INITN	5	-	-	INITN	5	-	-	INITN	5	-	-
-	GNDIO5	5	-	-	GNDIO5	5	-	-	GNDIO5	5	-	-
-	GNDIO5	5	-	-	GNDIO5	5	-	-	GNDIO5	5	-	-
Y3	-	-	-	-	PB3B	5	-	-	PB7B	5	-	-
W3	-	-	-	-	PB4A	5	T	-	PB8A	5	T	-
W4	-	-	-	-	PB4B	5	C	-	PB8B	5	C	-
AA2	-	-	-	-	PB5A	5	-	-	PB9A	5	-	-
AA1	-	-	-	-	PB6B	5	-	-	PB10B	5	-	-
W6	PB2A	5	-	-	PB7A	5	T	DQS	PB11A	5	T	DQS
W7	-	-	-	-	PB7B	5	C	-	PB11B	5	C	-
Y4	PB3A	5	T	-	PB8A	5	T	-	PB12A	5	T	-
-	GNDIO5	5	-	-	GNDIO5	5	-	-	GNDIO5	5	-	-
Y5	PB3B	5	C	-	PB8B	5	C	-	PB12B	5	C	-
AB2	PB4A	5	T	-	PB9A	5	T	-	PB13A	5	T	-
AA3	PB4B	5	C	-	PB9B	5	C	-	PB13B	5	C	-
AB3	PB5A	5	T	-	PB10A	5	T	-	PB14A	5	T	-
AA4	PB5B	5	C	-	PB10B	5	C	-	PB14B	5	C	-
W8	PB6A	5	T	-	PB11A	5	T	-	PB15A	5	T	-
W9	PB6B	5	C	-	PB11B	5	C	-	PB15B	5	C	-
AB4	PB7A	5	T	VREF1_5	PB12A	5	T	VREF1_5	PB16A	5	T	VREF1_5
-	GNDIO5	5	-	-	GNDIO5	5	-	-	GNDIO5	5	-	-
AA5	PB7B	5	C	-	PB12B	5	C	-	PB16B	5	C	-
AB5	PB8A	5	-	-	PB13A	5	-	-	PB17A	5	-	-
Y6	PB9B	5	-	-	PB14B	5	-	-	PB18B	5	-	-
AA6	PB10A	5	T	DQS	PB15A	5	T	DQS	PB19A	5	T	DQS
AB6	PB10B	5	C	-	PB15B	5	C	-	PB19B	5	C	-
Y9	PB11A	5	T	-	PB16A	5	T	-	PB20A	5	T	-

LFXP10, LFXP15 & LFXP20 Logic Signal Connections: 388 fpBGA (Cont.)

	LFXP10				LFXP15				LFXP20			
Ball Number	Ball Function	Bank	Diff.	Dual Function	Ball Function	Bank	Diff.	Dual Function	Ball Function	Bank	Diff.	Dual Function
C20	PT38A	1	T	-	PT43A	1	T	-	PT47A	1	T	-
C21	PT37B	1	C	-	PT42B	1	C	-	PT46B	1	C	-
C22	PT37A	1	T	-	PT42A	1	T	-	PT46A	1	T	-
B22	PT36B	1	C	-	PT41B	1	C	-	PT45B	1	C	-
A21	PT36A	1	T	-	PT41A	1	T	-	PT45A	1	T	-
D15	PT35B	1	C	-	PT40B	1	C	-	PT44B	1	C	-
D14	PT35A	1	T	-	PT40A	1	T	-	PT44A	1	T	-
B21	PT34B	1	C	VREF1_1	PT39B	1	C	VREF1_1	PT43B	1	C	VREF1_1
-	GNDIO1	1	-	-	GNDIO1	1	-	-	GNDIO1	1	-	-
A20	PT34A	1	T	DQS	PT39A	1	T	DQS	PT43A	1	T	DQS
B20	PT33B	1	-	-	PT38B	1	-	-	PT42B	1	-	-
A19	PT32A	1	-	-	PT37A	1	-	-	PT41A	1	-	-
B19	PT31B	1	C	-	PT36B	1	C	-	PT40B	1	C	-
A18	PT31A	1	T	-	PT36A	1	T	-	PT40A	1	T	-
C14	PT30B	1	C	-	PT35B	1	C	-	PT39B	1	C	-
C13	PT30A	1	T	D0	PT35A	1	T	D0	PT39A	1	T	D0
B18	PT29B	1	C	D1	PT34B	1	C	D1	PT38B	1	C	D1
A17	PT29A	1	T	VREF2_1	PT34A	1	T	VREF2_1	PT38A	1	T	VREF2_1
B17	PT28B	1	C	-	PT33B	1	C	-	PT37B	1	C	-
A16	PT28A	1	T	D2	PT33A	1	T	D2	PT37A	1	T	D2
-	GNDIO1	1	-	-	GNDIO1	1	-	-	GNDIO1	1	-	-
B16	PT27B	1	C	D3	PT32B	1	C	D3	PT36B	1	C	D3
A15	PT27A	1	T	-	PT32A	1	T	-	PT36A	1	T	-
B15	PT26B	1	C	-	PT31B	1	C	-	PT35B	1	C	-
A14	PT26A	1	T	DQS	PT31A	1	T	DQS	PT35A	1	T	DQS
D13	PT25B	1	-	-	PT30B	1	-	-	PT34B	1	-	-
D12	PT24A	1	-	D4	PT29A	1	-	D4	PT33A	1	-	D4
B14	PT23B	1	C	-	PT28B	1	C	-	PT32B	1	C	-
A13	PT23A	1	T	D5	PT28A	1	T	D5	PT32A	1	T	D5
-	GNDIO1	1	-	-	GNDIO1	1	-	-	GNDIO1	1	-	-
B13	PT22B	1	C	D6	PT27B	1	C	D6	PT31B	1	C	D6
A12	PT22A	1	T	-	PT27A	1	T	-	PT31A	1	T	-
B12	PT21B	1	C	D7	PT26B	1	C	D7	PT30B	1	C	D7
C12	PT21A	1	T	-	PT26A	1	T	-	PT30A	1	T	-
C11	PT20B	0	C	BUSY	PT25B	0	C	BUSY	PT29B	0	C	BUSY
-	GNDIO0	0	-	-	GNDIO0	0	-	-	GNDIO0	0	-	-
B11	PT20A	0	T	CS1N	PT25A	0	T	CS1N	PT29A	0	T	CS1N
A11	PT19B	0	C	PCLKC0_0	PT24B	0	C	PCLKC0_0	PT28B	0	C	PCLKC0_0
A10	PT19A	0	T	PCLKT0_0	PT24A	0	T	PCLKT0_0	PT28A	0	T	PCLKT0_0
B10	PT18B	0	C	-	PT23B	0	C	-	PT27B	0	C	-
B9	PT18A	0	T	DQS	PT23A	0	T	DQS	PT27A	0	T	DQS
D11	PT17B	0	-	-	PT22B	0	-	-	PT26B	0	-	-
D10	PT16A	0	-	DOUT	PT21A	0	-	DOUT	PT25A	0	-	DOUT
A9	PT15B	0	C	-	PT20B	0	C	-	PT24B	0	C	-
-	GNDIO0	0	-	-	GNDIO0	0	-	-	GNDIO0	0	-	-
C8	PT15A	0	T	WRITEN	PT20A	0	T	WRITEN	PT24A	0	T	WRITEN
B8	PT14B	0	C	-	PT19B	0	C	-	PT23B	0	C	-
A8	PT14A	0	T	VREF1_0	PT19A	0	T	VREF1_0	PT23A	0	T	VREF1_0
C7	PT13B	0	C	-	PT18B	0	C	-	PT22B	0	C	-

LFXP15 & LFXP20 Logic Signal Connections: 484 fpBGA

	LFXP15				LFXP20			
Ball Number	Ball Function	Bank	Differential	Dual Function	Ball Function	Bank	Differential	Dual Function
F5	PROGRAMN	7	-	-	PROGRAMN	7	-	-
E3	CCLK	7	-	-	CCLK	7	-	-
C1	PL2B	7	-	-	PL2B	7	-	-
-	GNDIO7	7	-	-	GNDIO7	7	-	-
G5	PL3A	7	T[3]	-	PL3A	7	T[3]	-
G6	PL3B	7	C[3]	-	PL3B	7	C[3]	-
F4	PL4A	7	T	-	PL4A	7	T	-
F3	PL4B	7	C	-	PL4B	7	C	-
G4	PL5A	7	T[3]	-	PL5A	7	T[3]	-
G3	PL5B	7	C[3]	-	PL5B	7	C[3]	-
D1	PL6A	7	T[3]	-	PL6A	7	T[3]	-
D2	PL6B	7	C[3]	-	PL6B	7	C[3]	-
-	GNDIO7	7	-	-	GNDIO7	7	-	-
E1	PL7A	7	T	LUM0_PLLT_FB_A	PL7A	7	T	LUM0_PLLT_FB_A
E2	PL7B	7	C	LUM0_PLLC_FB_A	PL7B	7	C	LUM0_PLLC_FB_A
H5	PL8A	7	T[3]	-	PL8A	7	T[3]	-
H6	PL8B	7	C[3]	-	PL8B	7	C[3]	-
H4	PL9A	7	-	-	PL9A	7	-	-
H3	PL10B	7	-	VREF1_7	PL10B	7	-	VREF1_7
F1	PL11A	7	T[3]	DQS	PL11A	7	T[3]	DQS
F2	PL11B	7	C[3]	-	PL11B	7	C[3]	-
-	GNDIO7	7	-	-	GNDIO7	7	-	-
J5	PL12A	7	T	-	PL12A	7	T	-
J6	PL12B	7	C	-	PL12B	7	C	-
G1	PL13A	7	T[3]	-	PL13A	7	T[3]	-
G2	PL13B	7	C[3]	-	PL13B	7	C[3]	-
J4	PL15A	7	T[3]	-	PL15A	7	T[3]	-
J3	PL15B	7	C[3]	-	PL15B	7	C[3]	-
-	GNDIO7	7	-	-	GNDIO7	7	-	-
H1	PL16A	7	T	LUM0_PLLT_IN_A	PL16A	7	T	LUM0_PLLT_IN_A
H2	PL16B	7	C	LUM0_PLLC_IN_A	PL16B	7	C	LUM0_PLLC_IN_A
J1	PL17A	7	T[3]	-	PL17A	7	T[3]	-
J2	PL17B	7	C[3]	-	PL17B	7	C[3]	-
K3	PL18A	7	-	VREF2_7	PL18A	7	-	VREF2_7
K2	PL19B	7	-	-	PL19B	7	-	-
K4	PL20A	7	T[3]	DQS	PL20A	7	T[3]	DQS
-	GNDIO7	7	-	-	GNDIO7	7	-	-
K5	PL20B	7	C[3]	-	PL20B	7	C[3]	-
K1	PL21A	7	T	-	PL21A	7	T	-
L2	PL21B	7	C	-	PL21B	7	C	-
L4	PL22A	7	T[3]	-	PL22A	7	T[3]	-
L3	PL22B	7	C[3]	-	PL22B	7	C[3]	-

LFXP15 & LFXP20 Logic Signal Connections: 484 fpBGA (Cont.)

	LFXP15				LFXP20			
Ball Number	Ball Function	Bank	Differential	Dual Function	Ball Function	Bank	Differential	Dual Function
D18	-	-	-	-	PT55B	1	C	-
E18	-	-	-	-	PT55A	1	T	-
C19	-	-	-	-	PT54B	1	C	-
C18	-	-	-	-	PT54A	1	T	-
C21	-	-	-	-	PT53B	1	C	-
-	GNDIO1	1	-	-	GNDIO1	1	-	-
B21	-	-	-	-	PT53A	1	T	-
E17	PT48B	1	C	-	PT52B	1	C	-
E16	PT48A	1	T	-	PT52A	1	T	-
C17	PT47B	1	C	-	PT51B	1	C	-
D17	PT47A	1	T	DQS	PT51A	1	T	DQS
F17	PT46B	1	-	-	PT50B	1	-	-
F16	PT45A	1	-	-	PT49A	1	-	-
C16	PT44B	1	C	-	PT48B	1	C	-
D16	PT44A	1	T	-	PT48A	1	T	-
A20	PT43B	1	C	-	PT47B	1	C	-
-	GNDIO1	1	-	-	GNDIO1	1	-	-
B20	PT43A	1	T	-	PT47A	1	T	-
A19	PT42B	1	C	-	PT46B	1	C	-
B19	PT42A	1	T	-	PT46A	1	T	-
C15	PT41B	1	C	-	PT45B	1	C	-
D15	PT41A	1	T	-	PT45A	1	T	-
A18	PT40B	1	C	-	PT44B	1	C	-
B18	PT40A	1	T	-	PT44A	1	T	-
F15	PT39B	1	C	VREF1_1	PT43B	1	C	VREF1_1
-	GNDIO1	1	-	-	GNDIO1	1	-	-
E15	PT39A	1	T	DQS	PT43A	1	T	DQS
A17	PT38B	1	-	-	PT42B	1	-	-
B17	PT37A	1	-	-	PT41A	1	-	-
E14	PT36B	1	C	-	PT40B	1	C	-
F14	PT36A	1	T	-	PT40A	1	T	-
D14	PT35B	1	C	-	PT39B	1	C	-
C14	PT35A	1	T	D0	PT39A	1	T	D0
A16	PT34B	1	C	D1	PT38B	1	C	D1
B16	PT34A	1	T	VREF2_1	PT38A	1	T	VREF2_1
A15	PT33B	1	C	-	PT37B	1	C	-
B15	PT33A	1	T	D2	PT37A	1	T	D2
-	GNDIO1	1	-	-	GNDIO1	1	-	-
E13	PT32B	1	C	D3	PT36B	1	C	D3
D13	PT32A	1	T	-	PT36A	1	T	-
C13	PT31B	1	C	-	PT35B	1	C	-
B13	PT31A	1	T	DQS	PT35A	1	T	DQS

LFXP15 & LFXP20 Logic Signal Connections: 484 fpBGA (Cont.)

	LFXP15				LFXP20			
Ball Number	Ball Function	Bank	Differential	Dual Function	Ball Function	Bank	Differential	Dual Function
J15	GND	-	-	-	GND	-	-	-
J8	GND	-	-	-	GND	-	-	-
J9	GND	-	-	-	GND	-	-	-
K10	GND	-	-	-	GND	-	-	-
K11	GND	-	-	-	GND	-	-	-
K12	GND	-	-	-	GND	-	-	-
K13	GND	-	-	-	GND	-	-	-
K14	GND	-	-	-	GND	-	-	-
K9	GND	-	-	-	GND	-	-	-
L10	GND	-	-	-	GND	-	-	-
L11	GND	-	-	-	GND	-	-	-
L12	GND	-	-	-	GND	-	-	-
L13	GND	-	-	-	GND	-	-	-
L14	GND	-	-	-	GND	-	-	-
L9	GND	-	-	-	GND	-	-	-
M10	GND	-	-	-	GND	-	-	-
M11	GND	-	-	-	GND	-	-	-
M12	GND	-	-	-	GND	-	-	-
M13	GND	-	-	-	GND	-	-	-
M14	GND	-	-	-	GND	-	-	-
M9	GND	-	-	-	GND	-	-	-
N10	GND	-	-	-	GND	-	-	-
N11	GND	-	-	-	GND	-	-	-
N12	GND	-	-	-	GND	-	-	-
N13	GND	-	-	-	GND	-	-	-
N14	GND	-	-	-	GND	-	-	-
N9	GND	-	-	-	GND	-	-	-
P10	GND	-	-	-	GND	-	-	-
P11	GND	-	-	-	GND	-	-	-
P12	GND	-	-	-	GND	-	-	-
P13	GND	-	-	-	GND	-	-	-
P14	GND	-	-	-	GND	-	-	-
P15	GND	-	-	-	GND	-	-	-
P8	GND	-	-	-	GND	-	-	-
P9	GND	-	-	-	GND	-	-	-
R14	GND	-	-	-	GND	-	-	-
R9	GND	-	-	-	GND	-	-	-
F10	VCC	-	-	-	VCC	-	-	-
F13	VCC	-	-	-	VCC	-	-	-
G10	VCC	-	-	-	VCC	-	-	-
G13	VCC	-	-	-	VCC	-	-	-
G14	VCC	-	-	-	VCC	-	-	-

LFXP15 & LFXP20 Logic Signal Connections: 484 fpBGA (Cont.)

	LFXP15				LFXP20			
Ball Number	Ball Function	Bank	Differential	Dual Function	Ball Function	Bank	Differential	Dual Function
H13	VCCIO1	1	-	-	VCCIO1	1	-	-
K15	VCCIO2	2	-	-	VCCIO2	2	-	-
L15	VCCIO2	2	-	-	VCCIO2	2	-	-
L16	VCCIO2	2	-	-	VCCIO2	2	-	-
L17	VCCIO2	2	-	-	VCCIO2	2	-	-
M15	VCCIO3	3	-	-	VCCIO3	3	-	-
M16	VCCIO3	3	-	-	VCCIO3	3	-	-
M17	VCCIO3	3	-	-	VCCIO3	3	-	-
N15	VCCIO3	3	-	-	VCCIO3	3	-	-
R12	VCCIO4	4	-	-	VCCIO4	4	-	-
R13	VCCIO4	4	-	-	VCCIO4	4	-	-
T12	VCCIO4	4	-	-	VCCIO4	4	-	-
U12	VCCIO4	4	-	-	VCCIO4	4	-	-
R10	VCCIO5	5	-	-	VCCIO5	5	-	-
R11	VCCIO5	5	-	-	VCCIO5	5	-	-
T11	VCCIO5	5	-	-	VCCIO5	5	-	-
U11	VCCIO5	5	-	-	VCCIO5	5	-	-
M6	VCCIO6	6	-	-	VCCIO6	6	-	-
M7	VCCIO6	6	-	-	VCCIO6	6	-	-
M8	VCCIO6	6	-	-	VCCIO6	6	-	-
N8	VCCIO6	6	-	-	VCCIO6	6	-	-
K8	VCCIO7	7	-	-	VCCIO7	7	-	-
L6	VCCIO7	7	-	-	VCCIO7	7	-	-
L7	VCCIO7	7	-	-	VCCIO7	7	-	-
L8	VCCIO7	7	-	-	VCCIO7	7	-	-

1. Applies to LFXP “C” only.
2. Applies to LFXP “E” only.
3. Supports dedicated LVDS outputs.