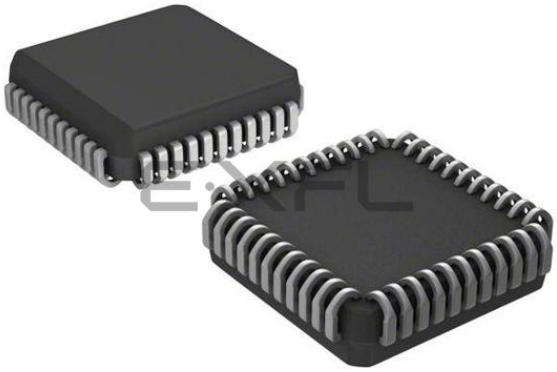

Welcome to E-XFL.COM

What is "Embedded - Microcontrollers"?

"Embedded - Microcontrollers" refer to small, integrated circuits designed to perform specific tasks within larger systems. These microcontrollers are essentially compact computers on a single chip, containing a processor core, memory, and programmable input/output peripherals. They are called "embedded" because they are embedded within electronic devices to control various functions, rather than serving as standalone computers. Microcontrollers are crucial in modern electronics, providing the intelligence and control needed for a wide range of applications.

Applications of "Embedded - Microcontrollers"

Details	
Product Status	Active
Core Processor	PIC
Core Size	8-Bit
Speed	20MHz
Connectivity	I²C, SPI, UART/USART
Peripherals	Brown-out Detect/Reset, POR, PWM, WDT
Number of I/O	33
Program Memory Size	14KB (8K x 14)
Program Memory Type	FLASH
EEPROM Size	-
RAM Size	368 x 8
Voltage - Supply (Vcc/Vdd)	4V ~ 5.5V
Data Converters	A/D 8x8b
Oscillator Type	External
Operating Temperature	-40°C ~ 125°C (TA)
Mounting Type	Surface Mount
Package / Case	44-LCC (J-Lead)
Supplier Device Package	44-PLCC (16.59x16.59)
Purchase URL	https://www.e-xfl.com/product-detail/microchip-technology/pic16f77-e-l

Note the following details of the code protection feature on PICmicro® MCUs.

- The PICmicro family meets the specifications contained in the Microchip Data Sheet.
- Microchip believes that its family of PICmicro microcontrollers is one of the most secure products of its kind on the market today, when used in the intended manner and under normal conditions.
- There are dishonest and possibly illegal methods used to breach the code protection feature. All of these methods, to our knowledge, require using the PICmicro microcontroller in a manner outside the operating specifications contained in the data sheet. The person doing so may be engaged in theft of intellectual property.
- Microchip is willing to work with the customer who is concerned about the integrity of their code.
- Neither Microchip nor any other semiconductor manufacturer can guarantee the security of their code. Code protection does not mean that we are guaranteeing the product as “unbreakable”.
- Code protection is constantly evolving. We at Microchip are committed to continuously improving the code protection features of our product.

If you have any further questions about this matter, please contact the local sales office nearest to you.

Information contained in this publication regarding device applications and the like is intended through suggestion only and may be superseded by updates. It is your responsibility to ensure that your application meets with your specifications. No representation or warranty is given and no liability is assumed by Microchip Technology Incorporated with respect to the accuracy or use of such information, or infringement of patents or other intellectual property rights arising from such use or otherwise. Use of Microchip’s products as critical components in life support systems is not authorized except with express written approval by Microchip. No licenses are conveyed, implicitly or otherwise, under any intellectual property rights.

Trademarks

The Microchip name and logo, the Microchip logo, FilterLab, KEELOQ, MPLAB, PIC, PICmicro, PICMASTER, PICSTART, PRO MATE, SEEVAL and The Embedded Control Solutions Company are registered trademarks of Microchip Technology Incorporated in the U.S.A. and other countries.

dsPIC, ECONOMONITOR, FanSense, FlexROM, fuzzyLAB, In-Circuit Serial Programming, ICSP, ICEPIC, microID, microPort, Migratable Memory, MPASM, MPLIB, MPLINK, MPSIM, MXDEV, PICC, PICDEM, PICDEM.net, rfPIC, Select Mode and Total Endurance are trademarks of Microchip Technology Incorporated in the U.S.A.

Serialized Quick Term Programming (SQTP) is a service mark of Microchip Technology Incorporated in the U.S.A.

All other trademarks mentioned herein are property of their respective companies.

© 2002, Microchip Technology Incorporated, Printed in the U.S.A., All Rights Reserved.

Printed on recycled paper.

DNV Certification, Inc. USA
ANSI • RAB QMS ACCREDITED
DNV MSC The Netherlands Accredited by the RvA
DNV
ISO 9001 / QS-9000 REGISTERED FIRM

Microchip received QS-9000 quality system certification for its worldwide headquarters, design and wafer fabrication facilities in Chandler and Tempe, Arizona in July 1999. The Company’s quality system processes and procedures are QS-9000 compliant for its PICmicro® 8-bit MCUs, KEELOQ® code hopping devices, Serial EEPROMs and microperipheral products. In addition, Microchip’s quality system for the design and manufacture of development systems is ISO 9001 certified.

FIGURE 1-1: PIC16F73 AND PIC16F76 BLOCK DIAGRAM

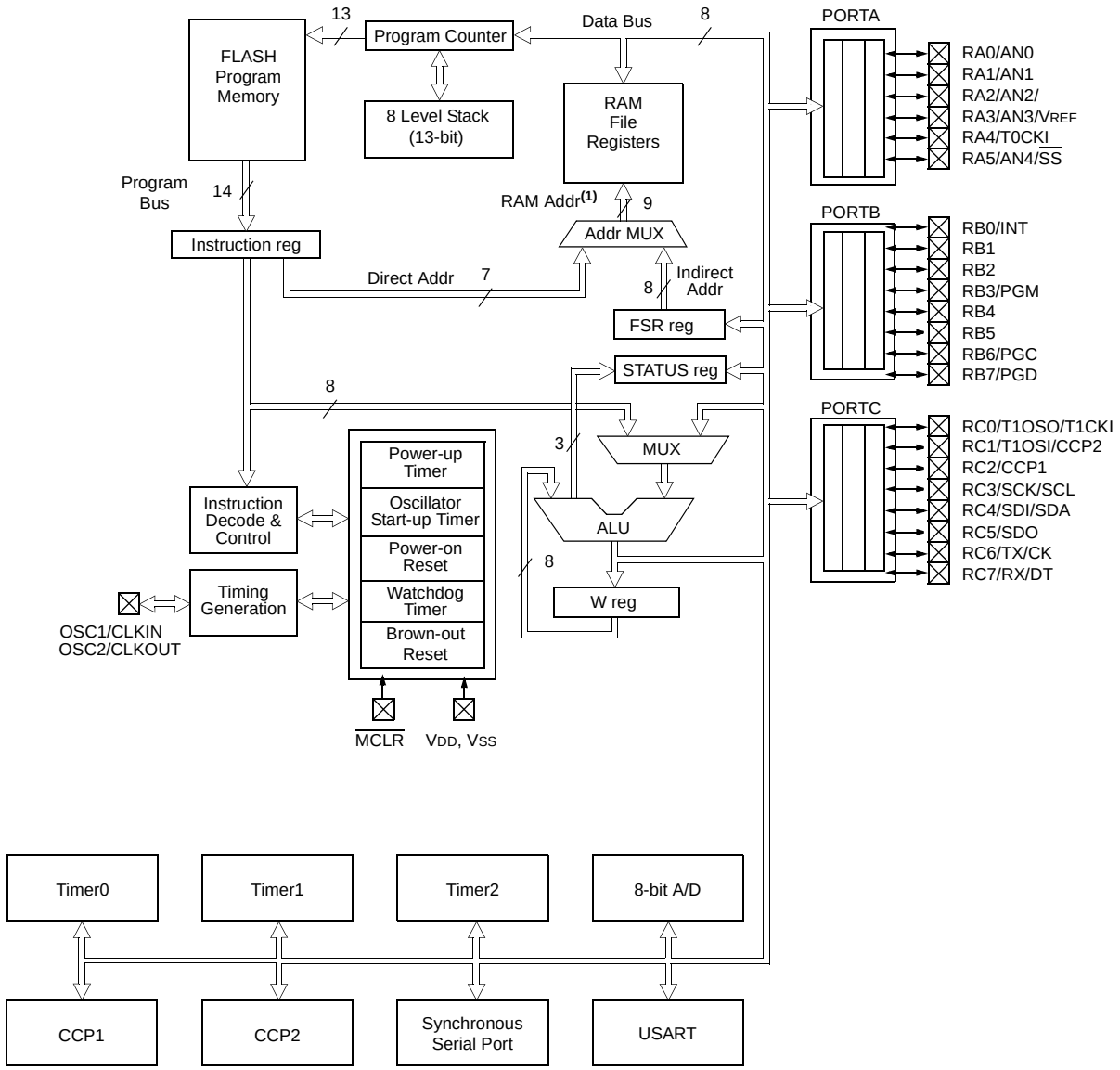

Device	Program FLASH	Data Memory
PIC16F73	4K	192 Bytes
PIC16F76	8K	368 Bytes

Note 1: Higher order bits are from the STATUS register.

© 2002 Microchip Technology Inc.

TABLE 2-1: SPECIAL FUNCTION REGISTER SUMMARY (CONTINUED)

Address	Name	Bit 7	Bit 6	Bit 5	Bit 4	Bit 3	Bit 2	Bit 1	Bit 0	Value on: POR, BOR	Details on page
Bank 1											
80h(4)	INDF	Addressing this location uses contents of FSR to address data memory (not a physical register)								0000 0000	27, 96
81h	OPTION_REG	$\overline{\text{RBPU}}$	INTEDG	T0CS	T0SE	PSA	PS2	PS1	PS0	1111 1111	20, 44, 96
82h(4)	PCL	Program Counter's (PC) Least Significant Byte								0000 0000	26, 96
83h(4)	STATUS	IRP	RP1	RP0	$\overline{\text{TO}}$	$\overline{\text{PD}}$	Z	DC	C	0001 1xxx	19, 96
84h(4)	FSR	Indirect data memory address pointer								xxxx xxxx	27, 96
85h	TRISA	—	—	PORTA Data Direction Register						--11 1111	32, 96
86h	TRISB	PORTB Data Direction Register								1111 1111	34, 96
87h	TRISC	PORTC Data Direction Register								1111 1111	35, 96
88h(5)	TRISD	PORTD Data Direction Register								1111 1111	36, 96
89h(5)	TRISE	IBF	OBF	IBOV	PSPMODE	—	PORTE Data Direction Bits			0000 -111	38, 96
8Ah(1,4)	PCLATH	—	—	—	Write Buffer for the upper 5 bits of the Program Counter					---0 0000	21, 96
8Bh(4)	INTCON	GIE	PEIE	TMR0IE	INTE	RBIE	TMR0IF	INTF	RBIF	0000 000x	23, 96
8Ch	PIE1	PSPIE(3)	ADIE	RCIE	TXIE	SSPIE	CCP1IE	TMR2IE	TMR1IE	0000 0000	22, 96
8Dh	PIE2	—	—	—	—	—	—	—	CCP2IE	---- ---0	24, 97
8Eh	PCON	—	—	—	—	—	—	$\overline{\text{POR}}$	BOR	---- --qq	25, 97
8Fh	—	Unimplemented								—	—
90h	—	Unimplemented								—	—
91h	—	Unimplemented								—	—
92h	PR2	Timer2 Period Register								1111 1111	52, 97
93h	SSPADD	Synchronous Serial Port (I^2C mode) Address Register								0000 0000	68, 97
94h	SSPSTAT	SMP	CKE	D/$\overline{\text{A}}$	P	S	R/$\overline{\text{W}}$	UA	BF	0000 0000	60, 97
95h	—	Unimplemented								—	—
96h	—	Unimplemented								—	—
97h	—	Unimplemented								—	—
98h	TXSTA	CSRC	TX9	TXEN	SYNC	—	BRGH	TRMT	TX9D	0000 -010	69, 97
99h	SPBRG	Baud Rate Generator Register								0000 0000	71, 97
9Ah	—	Unimplemented								—	
9Bh	—	Unimplemented								—	
9Ch	—	Unimplemented								—	
9Dh	—	Unimplemented								—	
9Eh	—	Unimplemented								—	
9Fh	ADCON1	—	—	—	—	—	PCFG2	PCFG1	PCFG0	---- -000	84, 97

Legend: x = unknown, u = unchanged, q = value depends on condition, - = unimplemented, read as '0', r = reserved.
Shaded locations are unimplemented, read as '0'.

Note 1: The upper byte of the program counter is not directly accessible. PCLATH is a holding register for the PC<12:8>, whose contents are transferred to the upper byte of the program counter during branches (CALL or GOTO).

2: Other (non power-up) RESETS include external RESET through $\overline{\text{MCLR}}$ and Watchdog Timer Reset.

3: Bits PSPIE and PSPIF are reserved on the 28-pin devices; always maintain these bits clear.

4: These registers can be addressed from any bank.

5: PORTD, PORTE, TRISD, and TRISE are not physically implemented on the 28-pin devices, read as '0'.

6: This bit always reads as a '1'.

TABLE 2-1: SPECIAL FUNCTION REGISTER SUMMARY (CONTINUED)

Address	Name	Bit 7	Bit 6	Bit 5	Bit 4	Bit 3	Bit 2	Bit 1	Bit 0	Value on: POR, BOR	Details on page
Bank 2											
100h(4)	INDF	Addressing this location uses contents of FSR to address data memory (not a physical register)								0000 0000	27, 96
101h	TMR0	Timer0 Module Register								xxxx xxxx	45, 96
102h(4)	PCL	Program Counter (PC) Least Significant Byte								0000 0000	26, 96
103h(4)	STATUS	IRP	RP1	RP0	$\overline{TO}$	$\overline{PD}$	Z	DC	C	0001 1xxx	19, 96
104h(4)	FSR	Indirect Data Memory Address Pointer								xxxx xxxx	27, 96
105h	—	Unimplemented								—	—
106h	PORTB	PORTB Data Latch when written: PORTB pins when read								xxxx xxxx	34, 96
107h	—	Unimplemented								—	—
108h	—	Unimplemented								—	—
109h	—	Unimplemented								—	—
10Ah(1,4)	PCLATH	—	—	—	Write Buffer for the upper 5 bits of the Program Counter					---0 0000	21, 96
10Bh(4)	INTCON	GIE	PEIE	TMR0IE	INTE	RBIE	TMR0IF	INTF	RBIF	0000 000x	23, 96
10Ch	PMDATA	Data Register Low Byte								xxxx xxxx	29, 97
10Dh	PMADR	Address Register Low Byte								xxxx xxxx	29, 97
10Eh	PMDATH	—	—	Data Register High Byte						xxxx xxxx	29, 97
10Fh	PMADRH	—	—	—	Address Register High Byte					xxxx xxxx	29, 97
Bank 3											
180h(4)	INDF	Addressing this location uses contents of FSR to address data memory (not a physical register)								0000 0000	27, 96
181h	OPTION_REG	$\overline{RBPU}$	INTEDG	T0CS	T0SE	PSA	PS2	PS1	PS0	1111 1111	20, 44, 96
182h(4)	PCL	Program Counter (PC) Least Significant Byte								0000 0000	26, 96
183h(4)	STATUS	IRP	RP1	RP0	$\overline{TO}$	$\overline{PD}$	Z	DC	C	0001 1xxx	19, 96
184h(4)	FSR	Indirect Data Memory Address Pointer								xxxx xxxx	27, 96
185h	—	Unimplemented								—	—
186h	TRISB	PORTB Data Direction Register								1111 1111	34, 96
187h	—	Unimplemented								—	—
188h	—	Unimplemented								—	—
189h	—	Unimplemented								—	—
18Ah(1,4)	PCLATH	—	—	—	Write Buffer for the upper 5 bits of the Program Counter					---0 0000	21, 96
18Bh(4)	INTCON	GIE	PEIE	TMR0IE	INTE	RBIE	TMR0IF	INTF	RBIF	0000 000x	23, 96
18Ch	PMCON1	— (6)	—	—	—	—	—	—	RD	1--- ---0	29, 97
18Dh	—	Unimplemented								—	
18Eh	—	Reserved maintain clear								0000 0000	
18Fh	—	Reserved maintain clear								0000 0000	

Legend: x = unknown, u = unchanged, q = value depends on condition, - = unimplemented, read as '0', r = reserved.
Shaded locations are unimplemented, read as ‘0’.

Note 1: The upper byte of the program counter is not directly accessible. PCLATH is a holding register for the PC<12:8>, whose contents are transferred to the upper byte of the program counter during branches (CALL or GOTO).
2: Other (non power-up) RESETS include external RESET through $\overline{MCLR}$ and Watchdog Timer Reset.
3: Bits PSPIE and PSPIF are reserved on the 28-pin devices; always maintain these bits clear.
4: These registers can be addressed from any bank.
5: PORTD, PORTE, TRISD, and TRISE are not physically implemented on the 28-pin devices, read as ‘0’.
6: This bit always reads as a ‘1’.

© 2002 Microchip Technology Inc.

2.2.2.8 PCON Register

The Power Control (PCON) register contains flag bits to allow differentiation between a Power-on Reset (POR), a Brown-out Reset (BOR), a Watchdog Reset (WDT) and an external $\overline{\text{MCLR}}$ Reset.

Note: $\overline{\text{BOR}}$ is unknown on POR. It must be set by the user and checked on subsequent RESETS to see if BOR is clear, indicating a brown-out has occurred. The BOR status bit is not predictable if the brown-out circuit is disabled (by clearing the BODEN bit in the configuration word).

REGISTER 2-8: PCON REGISTER (ADDRESS 8Eh)

U-0	U-0	U-0	U-0	U-0	U-0	R/W-0	R/W-1
—	—	—	—	—	—	$\overline{\text{POR}}$	$\overline{\text{BOR}}$
bit 7							bit 0

bit 7-2 **Unimplemented:** Read as '0'

bit 1 **$\overline{\text{POR}}$**: Power-on Reset Status bit
1 = No Power-on Reset occurred
0 = A Power-on Reset occurred (must be set in software after a Power-on Reset occurs)

bit 0 **$\overline{\text{BOR}}$**: Brown-out Reset Status bit
1 = No Brown-out Reset occurred
0 = A Brown-out Reset occurred (must be set in software after a Brown-out Reset occurs)

Legend:			
R = Readable bit	W = Writable bit	U = Unimplemented bit, read as ‘0’	
- n = Value at POR reset	’1’ = Bit is set	’0’ = Bit is cleared	x = Bit is unknown

TABLE 4-3: PORTB FUNCTIONS

Name	Bit#	Buffer	Function
RB0/INT	bit0	TTL/ST(1)	Input/output pin or external interrupt input. Internal software programmable weak pull-up.
RB1	bit1	TTL	Input/output pin. Internal software programmable weak pull-up.
RB2	bit2	TTL	Input/output pin. Internal software programmable weak pull-up.
RB3	bit3	TTL	Input/output pin. Internal software programmable weak pull-up.
RB4	bit4	TTL	Input/output pin (with interrupt-on-change). Internal software programmable weak pull-up.
RB5	bit5	TTL	Input/output pin (with interrupt-on-change). Internal software programmable weak pull-up.
RB6	bit6	TTL/ST(2)	Input/output pin (with interrupt-on-change). Internal software programmable weak pull-up. Serial programming clock.
RB7	bit7	TTL/ST(2)	Input/output pin (with interrupt-on-change). Internal software programmable weak pull-up. Serial programming data.

Legend: TTL = TTL input, ST = Schmitt Trigger input

Note 1: This buffer is a Schmitt Trigger input when configured as the external interrupt.

2: This buffer is a Schmitt Trigger input when used in Serial Programming mode.

TABLE 4-4: SUMMARY OF REGISTERS ASSOCIATED WITH PORTB

Address	Name	Bit 7	Bit 6	Bit 5	Bit 4	Bit 3	Bit 2	Bit 1	Bit 0	Value on: POR, BOR	Value on all other RESETS
06h, 106h	PORTB	RB7	RB6	RB5	RB4	RB3	RB2	RB1	RB0	xxxx xxxx	uuuu uuuu
86h, 186h	TRISB	PORTB Data Direction Register								1111 1111	1111 1111
81h, 181h	OPTION_REG	$\overline{\text{RBPU}}$	INTEDG	T0CS	T0SE	PSA	PS2	PS1	PS0	1111 1111	1111 1111

Legend: x = unknown, u = unchanged. Shaded cells are not used by PORTB.

© 2002 Microchip Technology Inc.

5.0 TIMER0 MODULE

The Timer0 module timer/counter has the following features:

- 8-bit timer/counter
- Readable and writable
- 8-bit software programmable prescaler
- Internal or external clock select
- Interrupt on overflow from FFh to 00h
- Edge select for external clock

Additional information on the Timer0 module is available in the PICmicro™ Mid-Range MCU Family Reference Manual (DS33023).

Figure 5-1 is a block diagram of the Timer0 module and the prescaler shared with the WDT.

Timer0 operation is controlled through the OPTION_REG register (Register 5-1 on the following page). Timer mode is selected by clearing bit T0CS (OPTION_REG<5>). In Timer mode, the Timer0 module will increment every instruction cycle (without prescaler). If the TMR0 register is written, the increment is inhibited for the following two instruction cycles. The user can work around this by writing an adjusted value to the TMR0 register.

Counter mode is selected by setting bit T0CS (OPTION_REG<5>). In Counter mode, Timer0 will increment, either on every rising or falling edge of pin RA4/T0CKI. The incrementing edge is determined by the Timer0 Source Edge Select bit T0SE (OPTION_REG<4>). Clearing bit T0SE selects the rising edge. Restrictions on the external clock input are discussed in detail in Section 5.2.

The prescaler is mutually exclusively shared between the Timer0 module and the Watchdog Timer. The prescaler is not readable or writable. Section 5.3 details the operation of the prescaler.

5.1 Timer0 Interrupt

The TMR0 interrupt is generated when the TMR0 register overflows from FFh to 00h. This overflow sets bit TMR0IF (INTCON<2>). The interrupt can be masked by clearing bit TMR0IE (INTCON<5>). Bit TMR0IF must be cleared in software by the Timer0 module Interrupt Service Routine, before re-enabling this interrupt. The TMR0 interrupt cannot awaken the processor from SLEEP, since the timer is shut-off during SLEEP.

FIGURE 5-1: BLOCK DIAGRAM OF THE TIMER0 MODULE AND PRESCALER

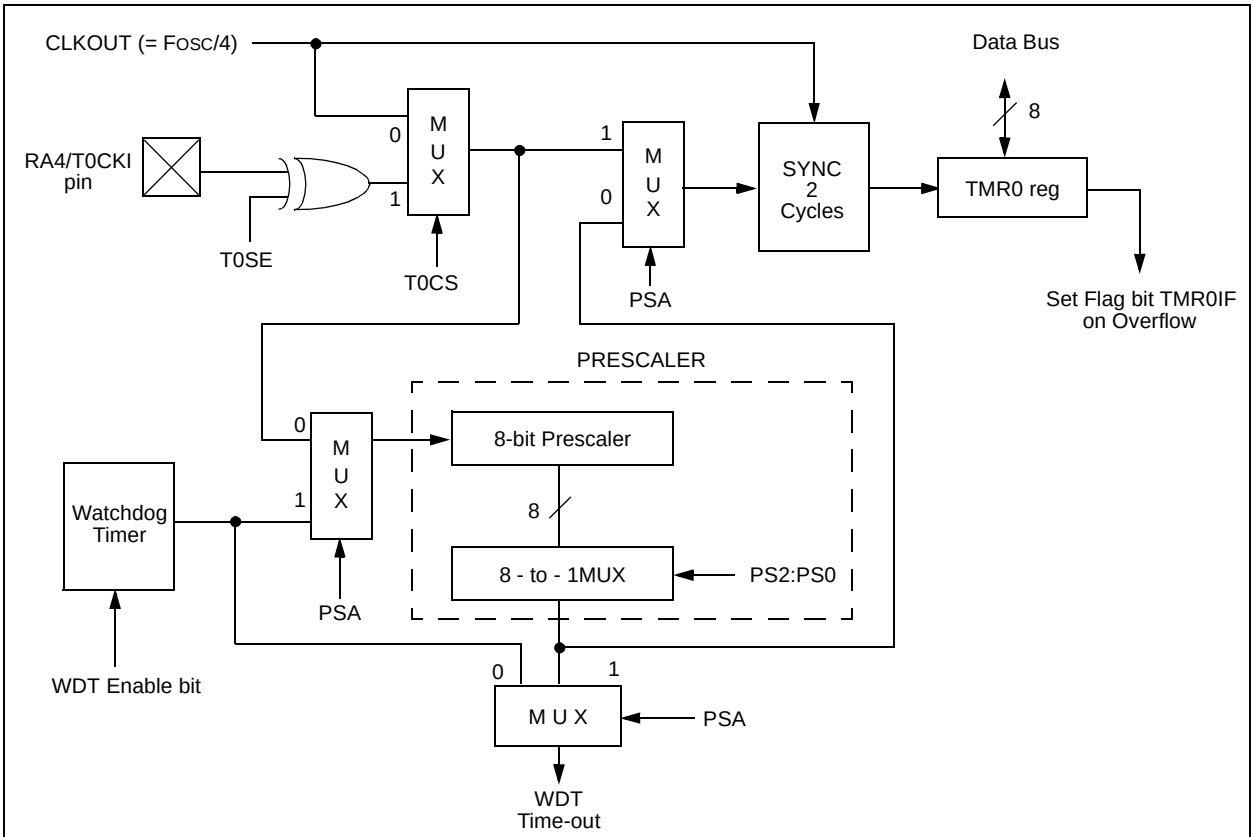

Note: T0CS, T0SE, PSA, PS2:PS0 are (OPTION_REG<5:0>).

REGISTER 8-1: CCP1CON REGISTER/CCP2CON REGISTER (ADDRESS: 17h/1Dh)

U-0	U-0	R/W-0	R/W-0	R/W-0	R/W-0	R/W-0	R/W-0
—	—	CCPxX	CCPxY	CCPxM3	CCPxM2	CCPxM1	CCPxM0
bit 7							bit 0

bit 7-6 **Unimplemented:** Read as '0'

bit 5-4 **CCPxX:CCPxY**: PWM Least Significant bits

Capture mode:
Unused

Compare mode:
Unused

PWM mode:
These bits are the two LSbs of the PWM duty cycle. The eight MSbs are found in CCPRxL.

bit 3-0 **CCPxM3:CCPxM0**: CCPx Mode Select bits

`0000` = Capture/Compare/PWM disabled (resets CCPx module)
`0100` = Capture mode, every falling edge
`0101` = Capture mode, every rising edge
`0110` = Capture mode, every 4th rising edge
`0111` = Capture mode, every 16th rising edge
`1000` = Compare mode, set output on match (CCPxIF bit is set)
`1001` = Compare mode, clear output on match (CCPxIF bit is set)
`1010` = Compare mode, generate software interrupt on match (CCPxIF bit is set, CCPx pin is unaffected)
`1011` = Compare mode, trigger special event (CCPxIF bit is set, CCPx pin is unaffected); CCP1 clears Timer1; CCP2 clears Timer1 and starts an A/D conversion (if A/D module is enabled)
`11xx` = PWM mode

Legend:			
R = Readable bit	W = Writable bit	U = Unimplemented bit, read as ‘0’	
- n = Value at POR reset	’1’ = Bit is set	’0’ = Bit is cleared	x = Bit is unknown

© 2002 Microchip Technology Inc.

8.5 PWM Mode (PWM)

In Pulse Width Modulation mode, the CCPx pin produces up to a 10-bit resolution PWM output. Since the CCP1 pin is multiplexed with the PORTC data latch, the TRISC<2> bit must be cleared to make the CCP1 pin an output.

Note:	Clearing the CCP1CON register will force the CCP1 PWM output latch to the default low level. This is not the PORTC I/O data latch.

Figure 8-3 shows a simplified block diagram of the CCP module in PWM mode.

For a step-by-step procedure on how to set up the CCP module for PWM operation, see Section 8.5.3.

FIGURE 8-3: SIMPLIFIED PWM BLOCK DIAGRAM

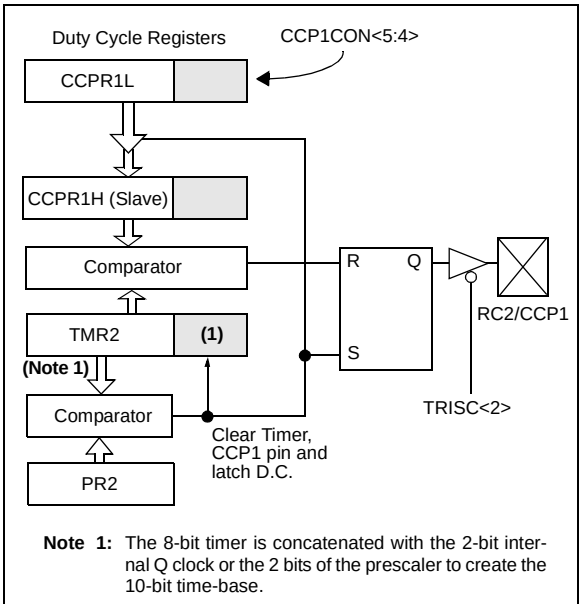

A PWM output (Figure 8-4) has a time-base (period) and a time that the output stays high (duty cycle). The frequency of the PWM is the inverse of the period (1/period).

FIGURE 8-4: PWM OUTPUT

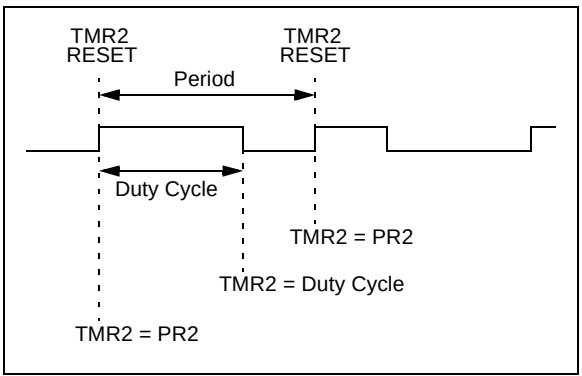

8.5.1 PWM PERIOD

The PWM period is specified by writing to the PR2 register. The PWM period can be calculated using the following formula:

$$\text{PWM period} = [(PR2) + 1] \cdot 4 \cdot T_{OSC} \cdot (\text{TMR2 prescale value})$$

PWM frequency is defined as 1 / [PWM period].

When TMR2 is equal to PR2, the following three events occur on the next increment cycle:

- TMR2 is cleared
- The CCP1 pin is set (exception: if PWM duty cycle = 0%, the CCP1 pin will not be set)
- The PWM duty cycle is latched from CCPR1L into CCPR1H

Note:	The Timer2 postscaler (see Section 8.3) is not used in the determination of the PWM frequency. The postscaler could be used to have a servo update rate at a different frequency than the PWM output.

8.5.2 PWM DUTY CYCLE

The PWM duty cycle is specified by writing to the CCPR1L register and to the CCP1CON<5:4> bits. Up to 10-bit resolution is available. The CCPR1L contains the eight MSbs and the CCP1CON<5:4> contains the two LSbs. This 10-bit value is represented by CCPR1L:CCP1CON<5:4>. The following equation is used to calculate the PWM duty cycle in time:

$$\text{PWM duty cycle} = (CCPR1L{:}CCP1CON\langle 5{:}4\rangle) \cdot T_{OSC} \cdot (\text{TMR2 prescale value})$$

CCPR1L and CCP1CON<5:4> can be written to at any time, but the duty cycle value is not latched into CCPR1H until after a match between PR2 and TMR2 occurs (i.e., the period is complete). In PWM mode, CCPR1H is a read only register.

The CCPR1H register and a 2-bit internal latch are used to double buffer the PWM duty cycle. This double buffering is essential for glitchless PWM operation.

When the CCPR1H and 2-bit latch match TMR2, concatenated with an internal 2-bit Q clock or 2 bits of the TMR2 prescaler, the CCP1 pin is cleared.

The maximum PWM resolution (bits) for a given PWM frequency is given by the formula:

$$\text{Resolution} = \frac{\log\left(\frac{F_{OSC}}{F_{PWM}}\right)}{\log(2)} \text{ bits}$$

Note:	If the PWM duty cycle value is longer than the PWM period, the CCP1 pin will not be cleared.

REGISTER 9-1: SSPSTAT: SYNC SERIAL PORT STATUS REGISTER (ADDRESS 94h)

R/W-0	R/W-0	R-0	R-0	R-0	R-0	R-0	R-0
SMP	CKE	D/$\overline{A}$	P	S	R/$\overline{W}$	UA	BF
bit 7							bit 0

bit 7 **SMP:** SPI Data Input Sample Phase bit

SPI Master mode:

1 = Input data sampled at end of data output time
0 = Input data sampled at middle of data output time (Microwire®)

SPI Slave mode:

SMP must be cleared when SPI is used in Slave mode

I^2C mode:

This bit must be maintained clear

bit 6 **CKE**: SPI Clock Edge Select bit (Figure 9-2, Figure 9-3, and Figure 9-4)

SPI mode, CKP = 0:

1 = Data transmitted on rising edge of SCK (Microwire® alternate)
0 = Data transmitted on falling edge of SCK

SPI mode, CKP = 1:

1 = Data transmitted on falling edge of SCK (Microwire® default)
0 = Data transmitted on rising edge of SCK

I^2C mode:

This bit must be maintained clear

bit 5 **D/$\overline{A}$**: Data/$\overline{Address}$ bit (I^2C mode only)

1 = Indicates that the last byte received or transmitted was data
0 = Indicates that the last byte received or transmitted was address

bit 4 **P**: STOP bit (I^2C mode only)

This bit is cleared when the SSP module is disabled, or when the START bit is detected last. SSPEN is cleared.

1 = Indicates that a STOP bit has been detected last (this bit is ’0’ on RESET)
0 = STOP bit was not detected last

bit 3 **S**: START bit (I^2C mode only)

This bit is cleared when the SSP module is disabled, or when the STOP bit is detected last. SSPEN is cleared.

1 = Indicates that a START bit has been detected last (this bit is ’0’ on RESET)
0 = START bit was not detected last

bit 2 **R/$\overline{W}$**: Read/$\overline{Write}$ bit Information (I^2C mode only)

This bit holds the R/W bit information following the last address match. This bit is only valid from the address match to the next START bit, STOP bit, or $\overline{ACK}$ bit.

1 = Read
0 = Write

bit 1 **UA**: Update Address bit (10-bit I^2C mode only)

1 = Indicates that the user needs to update the address in the SSPADD register
0 = Address does not need to be updated

bit 0 **BF**: Buffer Full Status bit

Receive (SPI and I^2C modes):

1 = Receive complete, SSPBUF is full
0 = Receive not complete, SSPBUF is empty

Transmit (I^2C mode only):

1 = Transmit in progress, SSPBUF is full
0 = Transmit complete, SSPBUF is empty

Legend:			
R = Readable bit	W = Writable bit	U = Unimplemented bit, read as ‘0’	
- n = Value at POR reset	’1’ = Bit is set	’0’ = Bit is cleared	x = Bit is unknown

© 2002 Microchip Technology Inc.

TABLE 9-1: REGISTERS ASSOCIATED WITH SPI OPERATION

Address	Name	Bit 7	Bit 6	Bit 5	Bit 4	Bit 3	Bit 2	Bit 1	Bit 0	Value on: POR, BOR	Value on all other RESETS
0Bh,8Bh. 10Bh,18Bh	INTCON	GIE	PEIE	TMR0IE	INTE	RBIE	TMR0IF	INTF	RBIF	0000 000x	0000 000u
0Ch	PIR1	PSPIF(1)	ADIF	RCIF	TXIF	SSPIF	CCP1IF	TMR2IF	TMR1IF	0000 0000	0000 0000
8Ch	PIE1	PSPIE(1)	ADIE	RCIE	TXIE	SSPIE	CCP1IE	TMR2IE	TMR1IE	0000 0000	0000 0000
87h	TRISC	PORTC Data Direction Register								1111 1111	1111 1111
13h	SSPBUF	Synchronous Serial Port Receive Buffer/Transmit Register								xxxx xxxx	uuuu uuuu
14h	SSPCON	WCOL	SSPOV	SSPEN	CKP	SSPM3	SSPM2	SSPM1	SSPM0	0000 0000	0000 0000
85h	TRISA	—	—	PORTA Data Direction Register						--11 1111	--11 1111
94h	SSPSTAT	SMP	CKE	D/$\overline{A}$	P	S	R/$\overline{W}$	UA	BF	0000 0000	0000 0000

Legend: x = unknown, u = unchanged, - = unimplemented, read as '0'. Shaded cells are not used by the SSP in SPI mode.

Note 1: Bits PSPIE and PSPIF are reserved on the PIC16F73/76; always maintain these bits clear.

© 2002 Microchip Technology Inc.

FIGURE 10-5: ASYNCHRONOUS RECEPTION

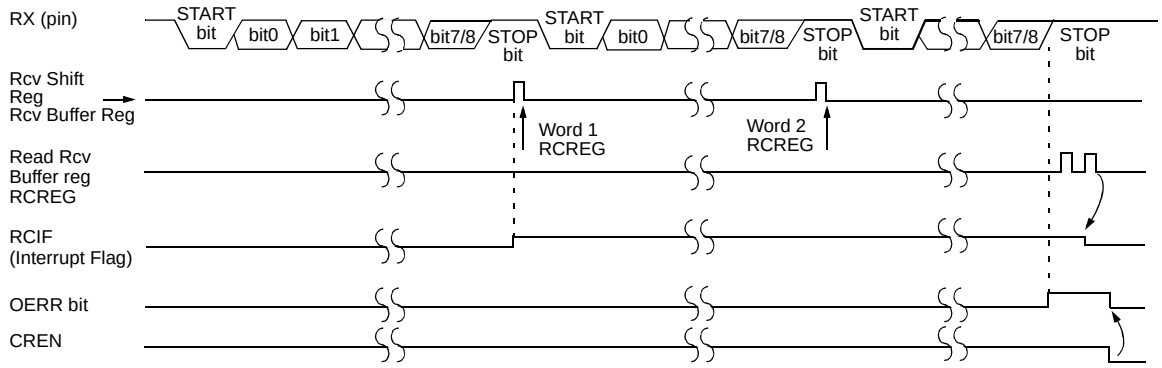

Note: This timing diagram shows three words appearing on the RX input. The RCREG (receive buffer) is read after the third word, causing the OERR (overrun) bit to be set. An overrun error indicates an error in user firmware.

Steps to follow when setting up an Asynchronous Reception:

1. Initialize the SPBRG register for the appropriate baud rate. If a high speed baud rate is desired, set bit BRGH (Section 10.1).
2. Enable the asynchronous serial port by clearing bit SYNC and setting bit SPEN.
3. If interrupts are desired, then set enable bit RCIE.
4. If 9-bit reception is desired, then set bit RX9.
5. Enable the reception by setting bit CREN.
6. Flag bit RCIF will be set when reception is complete and an interrupt will be generated if enable bit RCIE is set.
7. Read the RCSTA register to get the ninth bit (if enabled) and determine if any error occurred during reception.
8. Read the 8-bit received data by reading the RCREG register.
9. If any error occurred, clear the error by clearing enable bit CREN.
10. If using interrupts, ensure that GIE and PEIE in the INTCON register are set.

TABLE 10-6: REGISTERS ASSOCIATED WITH ASYNCHRONOUS RECEPTION

Address	Name	Bit 7	Bit 6	Bit 5	Bit 4	Bit 3	Bit 2	Bit 1	Bit 0	Value on: POR, BOR	Value on all other RESETS
0Bh, 8Bh, 10Bh,18Bh	INTCON	GIE	PEIE	TMR0IE	INTE	RBIE	TMR0IF	INTF	RBIF	0000 000x	0000 000u
0Ch	PIR1	PSPIF(1)	ADIF	RCIF	TXIF	SSPIF	CCP1IF	TMR2IF	TMR1IF	0000 0000	0000 0000
18h	RCSTA	SPEN	RX9	SREN	CREN	—	FERR	OERR	RX9D	0000 -00x	0000 -00x
1Ah	RCREG	USART Receive Register								0000 0000	0000 0000
8Ch	PIE1	PSPIE(1)	ADIE	RCIE	TXIE	SSPIE	CCP1IE	TMR2IE	TMR1IE	0000 0000	0000 0000
98h	TXSTA	CSRC	TX9	TXEN	SYNC	—	BRGH	TRMT	TX9D	0000 -010	0000 -010
99h	SPBRG	Baud Rate Generator Register								0000 0000	0000 0000

Legend: x = unknown, - = unimplemented locations read as '0'. Shaded cells are not used for asynchronous reception.
Note 1: Bits PSPIE and PSPIF are reserved on the PIC16F73/76 devices; always maintain these bits clear.

© 2002 Microchip Technology Inc.

FIGURE 12-7: TIME-OUT SEQUENCE ON POWER-UP ($\overline{\text{MCLR}}$ NOT TIED TO V_{DD}): CASE 1

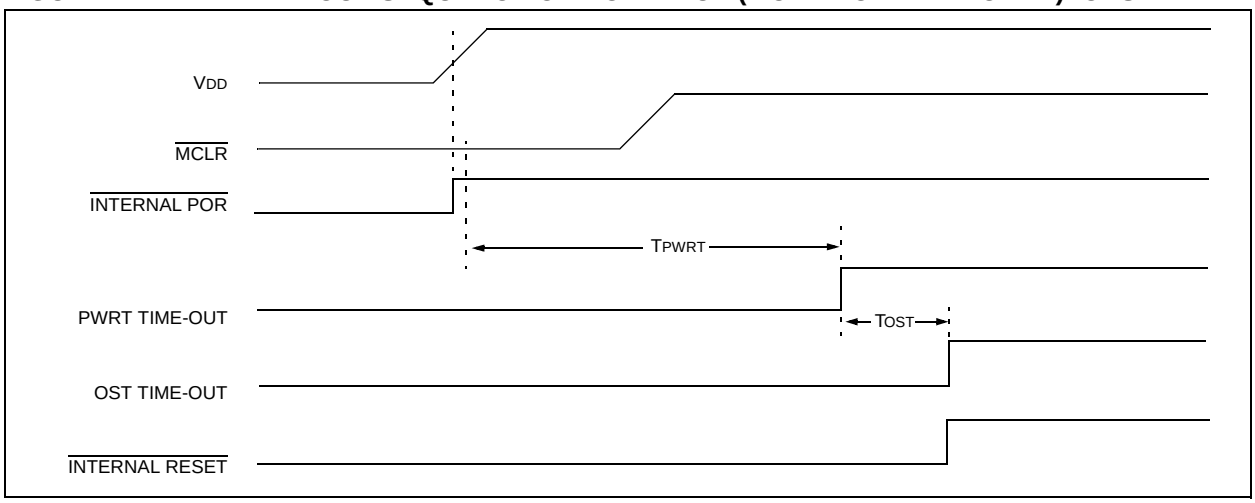

FIGURE 12-8: TIME-OUT SEQUENCE ON POWER-UP ($\overline{\text{MCLR}}$ NOT TIED TO V_{DD}): CASE 2

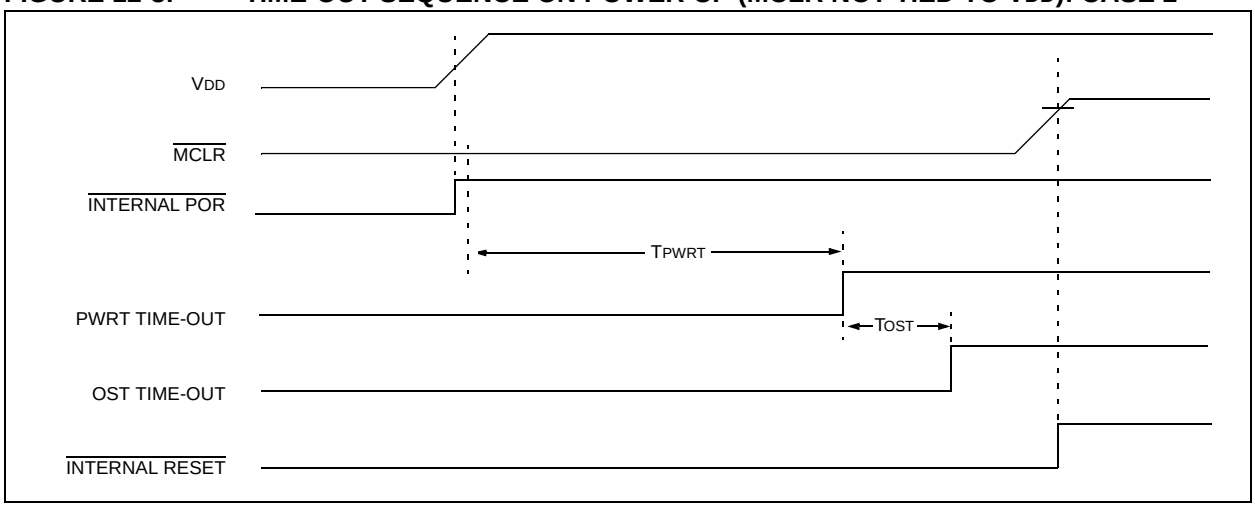

FIGURE 12-9: SLOW RISE TIME ($\overline{\text{MCLR}}$ TIED TO V_{DD} THROUGH RC NETWORK)

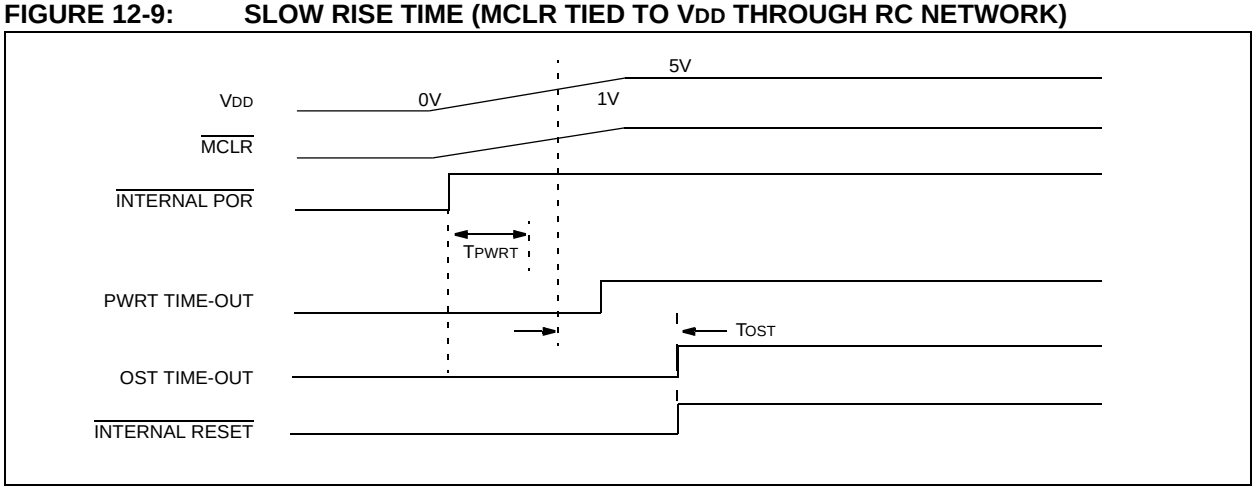

© 2002 Microchip Technology Inc.

12.11.1 INT INTERRUPT

External interrupt on the RB0/INT pin is edge triggered, either rising, if bit INTEDG (OPTION_REG<6>) is set, or falling, if the INTEDG bit is clear. When a valid edge appears on the RB0/INT pin, flag bit INTF (INTCON<1>) is set. This interrupt can be disabled by clearing enable bit INTE (INTCON<4>). Flag bit INTF must be cleared in software in the Interrupt Service Routine before re-enabling this interrupt. The INT interrupt can wake-up the processor from SLEEP, if bit INTE was set prior to going into SLEEP. The status of global interrupt enable bit GIE decides whether or not the processor branches to the interrupt vector following wake-up. See Section 12.14 for details on SLEEP mode.

12.11.2 TMR0 INTERRUPT

An overflow (FFh → 00h) in the TMR0 register will set flag bit TMR0IF (INTCON<2>). The interrupt can be enabled/disabled by setting/clearing enable bit TMR0IE (INTCON<5>). (Section 5.0)

12.11.3 PORTB INTCON CHANGE

An input change on PORTB<7:4> sets flag bit RBIF (INTCON<0>). The interrupt can be enabled/disabled by setting/clearing enable bit RBIE (INTCON<4>), see Section 4.2.

12.12 Context Saving During Interrupts

During an interrupt, only the return PC value is saved on the stack. Typically, users may wish to save key registers during an interrupt (i.e., W, PCLATH and STATUS registers). This will have to be implemented in software, as shown in Example 12-1.

For the PIC16F73/74 devices, the register W_TEMP must be defined in both banks 0 and 1 and must be defined at the same offset from the bank base address (i.e., If W_TEMP is defined at 20h in bank 0, it must also be defined at A0h in bank 1.). The registers, PCLATH_TEMP and STATUS_TEMP, are only defined in bank 0.

Since the upper 16 bytes of each bank are common in the PIC16F76/77 devices, temporary holding registers W_TEMP, STATUS_TEMP and PCLATH_TEMP should be placed in here. These 16 locations don't require banking and, therefore, make it easier for context save and restore. The same code shown in Example 12-1 can be used.

EXAMPLE 12-1: SAVING STATUS, W, AND PCLATH REGISTERS IN RAM

```
MOVWF   W_TEMP              ;Copy W to TEMP register
SWAPF   STATUS,W            ;Swap status to be saved into W
CLRF    STATUS              ;bank 0, regardless of current bank, Clears IRP,RP1,RP0
MOVWF   STATUS_TEMP         ;Save status to bank zero STATUS_TEMP register
MOVF    PCLATH, W           ;Only required if using pages 1, 2 and/or 3
MOVWF   PCLATH_TEMP         ;Save PCLATH into W
CLRF    PCLATH              ;Page zero, regardless of current page
:
:(ISR)                      ;Insert user code here
:
MOVF    PCLATH_TEMP, W      ;Restore PCLATH
MOVWF   PCLATH              ;Move W into PCLATH
SWAPF   STATUS_TEMP,W       ;Swap STATUS_TEMP register into W
                            ;(sets bank to original state)
MOVWF   STATUS              ;Move W into STATUS register
SWAPF   W_TEMP,F            ;Swap W_TEMP
SWAPF   W_TEMP,W            ;Swap W_TEMP into W
```


© 2002 Microchip Technology Inc.

13.0 INSTRUCTION SET SUMMARY

The PIC16 instruction set is highly orthogonal and is comprised of three basic categories:

- **Byte-oriented** operations
- **Bit-oriented** operations
- **Literal and control** operations

Each PIC16 instruction is a 14-bit word divided into an **opcode,** which specifies the instruction type and one or more **operands,** which further specify the operation of the instruction. The formats for each of the categories are presented in Figure 13-1, while the various opcode fields are summarized in Table 13-1.

Table 13-2 lists the instructions recognized by the MPASM™ Assembler. A complete description of each instruction is also available in the PICmicro™ Mid-Range Reference Manual (DS33023).

For **byte-oriented** instructions, ‘`f`’ represents a file register designator and ‘`d`’ represents a destination designator. The file register designator specifies which file register is to be used by the instruction.

The destination designator specifies where the result of the operation is to be placed. If ‘`d`’ is zero, the result is placed in the W register. If ‘`d`’ is one, the result is placed in the file register specified in the instruction.

For **bit-oriented** instructions, ‘`b`’ represents a bit field designator, which selects the bit affected by the operation, while ‘`f`’ represents the address of the file in which the bit is located.

For **literal and control** operations, ‘`k`’ represents an eight- or eleven-bit constant or literal value

One instruction cycle consists of four oscillator periods; for an oscillator frequency of 4 MHz, this gives a normal instruction execution time of 1 µs. All instructions are executed within a single instruction cycle, unless a conditional test is true, or the program counter is changed as a result of an instruction. When this occurs, the execution takes two instruction cycles, with the second cycle executed as a `NOP`.

Note:	To maintain upward compatibility with future PIC16F7X products, do not use the `OPTION` and `TRIS` instructions.

All instruction examples use the format ‘0xhh’ to represent a hexadecimal number, where ‘h’ signifies a hexadecimal digit.

13.1 READ-MODIFY-WRITE OPERATIONS

Any instruction that specifies a file register as part of the instruction performs a Read-Modify-Write (R-M-W) operation. The register is read, the data is modified, and the result is stored according to either the instruction, or the destination designator ‘d’. A read operation is performed on a register even if the instruction writes to that register.

For example, a “`clrf PORTB`” instruction will read PORTB, clear all the data bits, then write the result back to PORTB. This example would have the unintended result that the condition that sets the RBIF flag would be cleared for pins configured as inputs and using the PORTB interrupt-on-change feature.

TABLE 13-1: OPCODE FIELD DESCRIPTIONS

Field	Description
`f`	Register file address (0x00 to 0x7F)
`W`	Working register (accumulator)
`b`	Bit address within an 8-bit file register
`k`	Literal field, constant data or label
`x`	Don't care location (= `0` or `1`). The assembler will generate code with x = `0`. It is the recommended form of use for compatibility with all Microchip software tools.
`d`	Destination select; d = `0`: store result in W, d = 1: store result in file register f. Default is d = `1`.
`PC`	Program Counter
`TO`	Time-out bit
`PD`	Power-down bit

FIGURE 13-1: GENERAL FORMAT FOR INSTRUCTIONS

Byte-oriented file register operations

13 … 8	7	6 … 0
OPCODE	d	f (FILE #)

d = 0 for destination W
d = 1 for destination f
f = 7-bit file register address

Bit-oriented file register operations

13 … 10	9 … 7	6 … 0
OPCODE	b (BIT #)	f (FILE #)

b = 3-bit bit address
f = 7-bit file register address

Literal and control operations

General

13 … 8	7 … 0
OPCODE	k (literal)

k = 8-bit immediate value

`CALL` and `GOTO` instructions only

13 … 11	10 … 0
OPCODE	k (literal)

k = 11-bit immediate value

TABLE 15-7: SPI MODE REQUIREMENTS

Param No.	Symbol	Characteristic		Min	Typ†	Max	Units	Conditions
70*	TssL2scH, TssL2scL	$\overline{SS}$↓ to SCK↓ or SCK↑ input		TCY	—	—	ns	
71*	TscH	SCK input high time (Slave mode)		TCY + 20	—	—	ns	
72*	TscL	SCK input low time (Slave mode)		TCY + 20	—	—	ns	
73*	TdiV2scH, TdiV2scL	Setup time of SDI data input to SCK edge		100	—	—	ns	
74*	TscH2diL, TscL2diL	Hold time of SDI data input to SCK edge		100	—	—	ns	
75*	TdoR	SDO data output rise time	Standard(**F**) Extended(**LF**)	— —	10 25	25 50	ns ns	
76*	TdoF	SDO data output fall time		—	10	25	ns	
77*	TssH2doZ	$\overline{SS}$↑ to SDO output hi-impedance		10	—	50	ns	
78*	TscR	SCK output rise time (Master mode)	Standard(**F**) Extended(**LF**)	— —	10 25	25 50	ns ns	
79*	TscF	SCK output fall time (Master mode)		—	10	25	ns	
80*	TscH2doV, TscL2doV	SDO data output valid after SCK edge	Standard(**F**) Extended(**LF**)	— —	— —	50 145	ns ns	
81*	TdoV2scH, TdoV2scL	SDO data output setup to SCK edge		Tcy	—	—	ns	
82*	TssL2doV	SDO data output valid after $\overline{SS}$↓ edge		—	—	50	ns	
83*	TscH2ssH, TscL2ssH	$\overline{SS}$ ↑ after SCK edge		1.5TCY + 40	—	—	ns	

* These parameters are characterized but not tested.

† Data in "Typ" column is at 5V, 25°C unless otherwise stated. These parameters are for design guidance only and are not tested.

FIGURE 15-15: I²C BUS START/STOP BITS TIMING

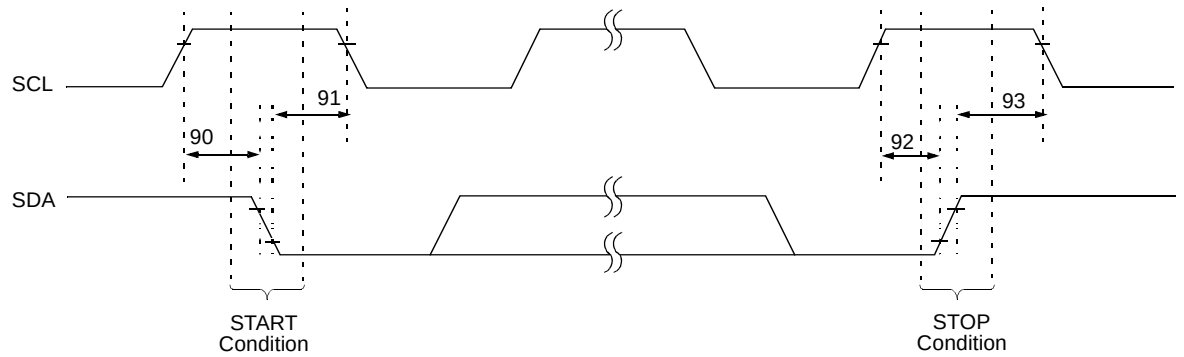

Note: Refer to Figure 15-3 for load conditions.

© 2002 Microchip Technology Inc.

FIGURE 16-5: TYPICAL IDD vs. FOSC OVER VDD (LP MODE)

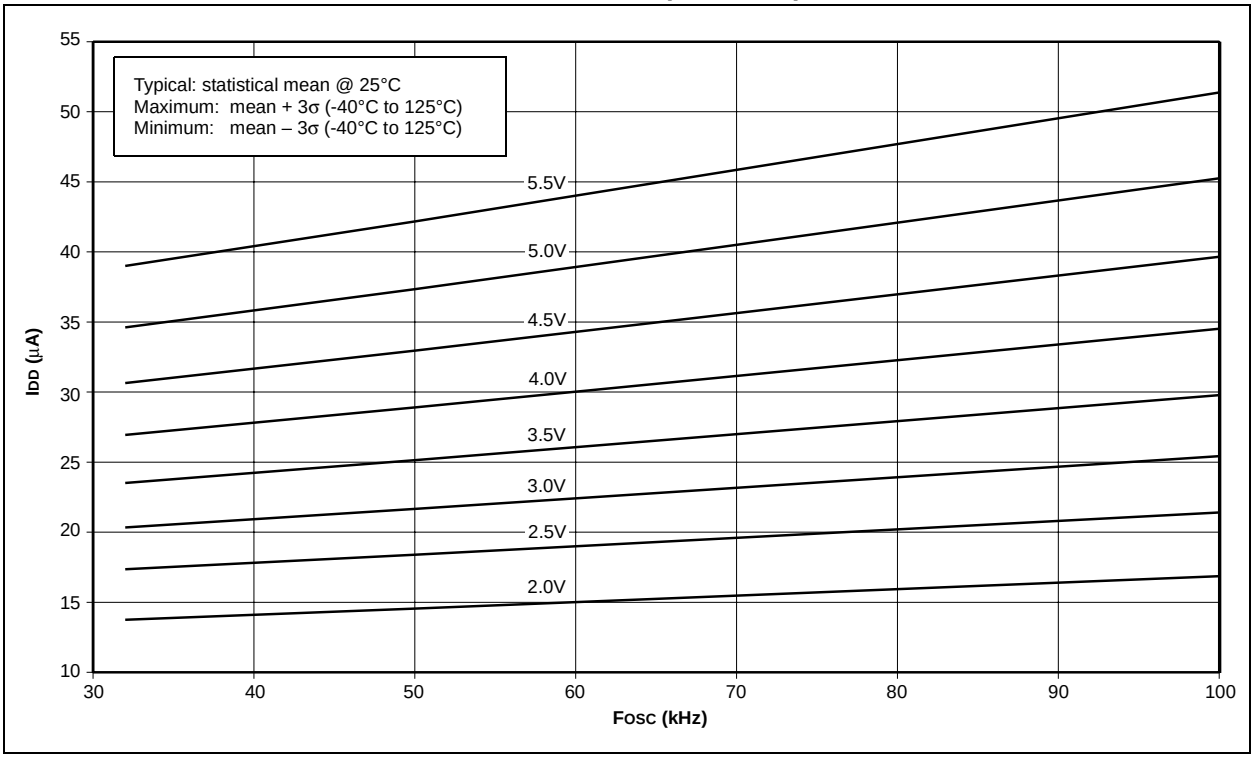

FIGURE 16-6: MAXIMUM IDD vs. FOSC OVER VDD (LP MODE)

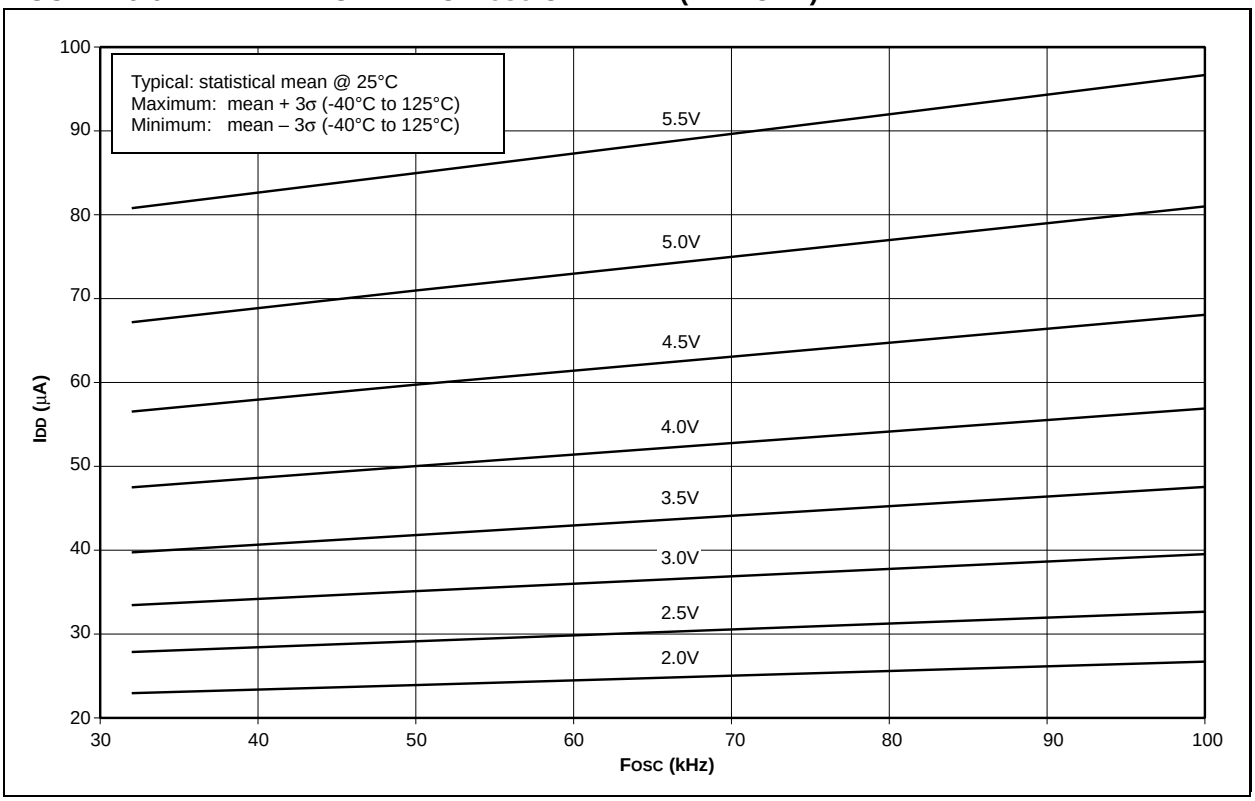

FIGURE 16-17: TYPICAL, MINIMUM AND MAXIMUM V_{OL} vs. I_{OL} (V_{DD} = 5V, -40°C TO 125°C)

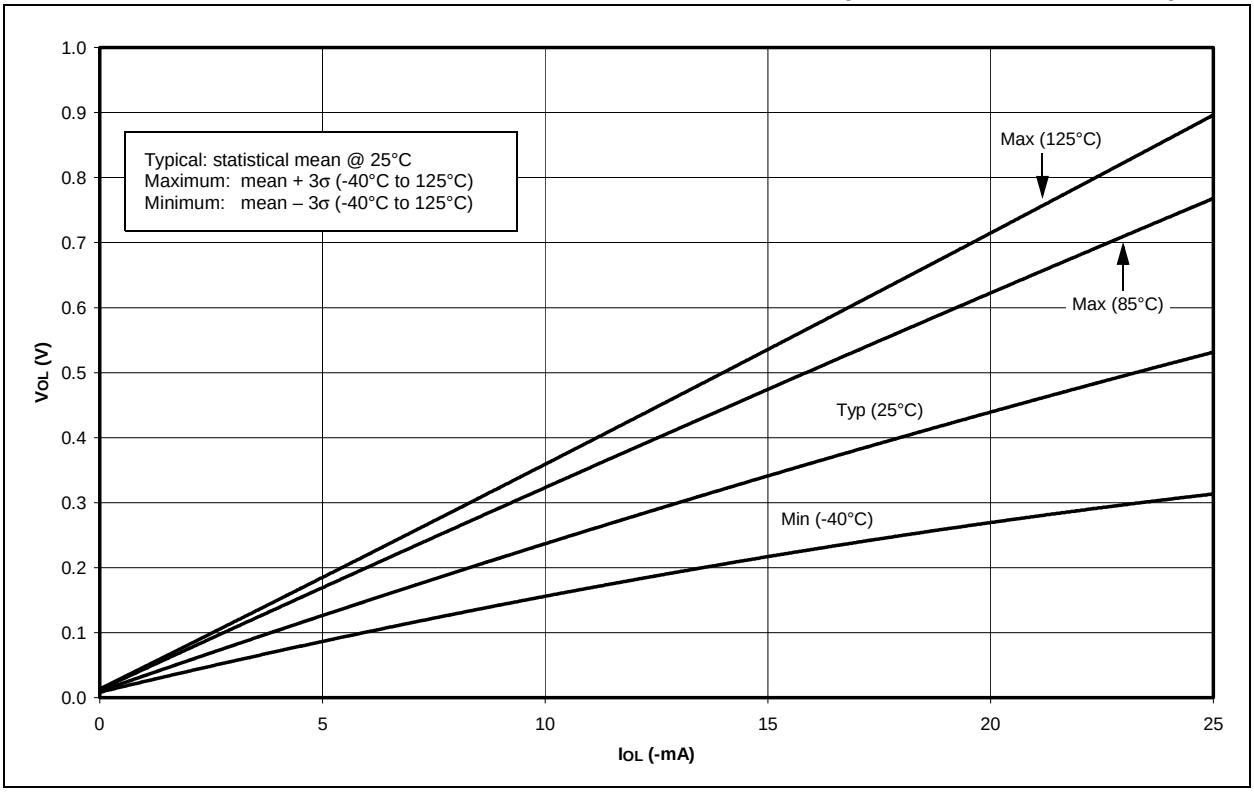

FIGURE 16-18: TYPICAL, MINIMUM AND MAXIMUM V_{OL} vs. I_{OL} (V_{DD} = 3V, -40°C TO 125°C)

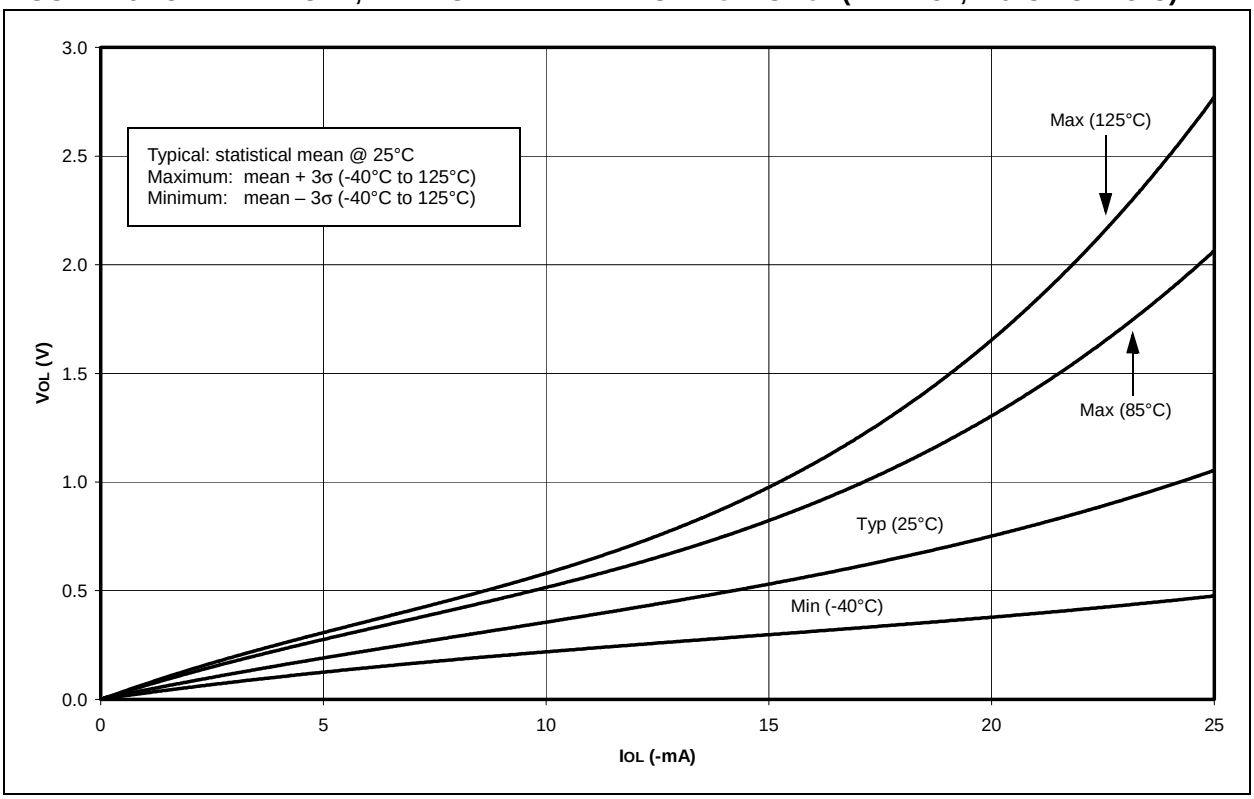

M

O

P

READER RESPONSE

It is our intention to provide you with the best documentation possible to ensure successful use of your Microchip product. If you wish to provide your comments on organization, clarity, subject matter, and ways in which our documentation can better serve you, please FAX your comments to the Technical Publications Manager at (480) 792-4150.

Please list the following information, and use this outline to provide us with your comments about this Data Sheet.

To: Technical Publications Manager Total Pages Sent

RE: Reader Response

From: Name _____

Company _____

Address _____

City / State / ZIP / Country _____

Telephone: (_____) _____ - _____ FAX: (_____) _____ - _____

Application (optional):

Would you like a reply?____Y ____N

Device: PIC16F7X Literature Number: DS30325B

Questions:

1. What are the best features of this document?

_____

_____

2. How does this document meet your hardware and software development needs?

_____

_____

3. Do you find the organization of this data sheet easy to follow? If not, why?

_____

_____

4. What additions to the data sheet do you think would enhance the structure and subject?

_____

_____

5. What deletions from the data sheet could be made without affecting the overall usefulness?

_____

_____

6. Is there any incorrect or misleading information (what and where)?

_____

_____

7. How would you improve this document?

_____

_____

8. How would you improve our software, systems, and silicon products?

_____

_____

© 2002 Microchip Technology Inc.