Welcome to E-XFL.COM

What is "Embedded - Microcontrollers"?

"Embedded - Microcontrollers" refer to small, integrated circuits designed to perform specific tasks within larger systems. These microcontrollers are essentially compact computers on a single chip, containing a processor core, memory, and programmable input/output peripherals. They are called "embedded" because they are embedded within electronic devices to control various functions, rather than serving as standalone computers. Microcontrollers are crucial in modern electronics, providing the intelligence and control needed for a wide range of applications.

Applications of "Embedded - Microcontrollers"

Details	
Product Status	Active
Core Processor	M16C/60
Core Size	16-Bit
Speed	24MHz
Connectivity	CANbus, I²C, IEBus, SIO, UART/USART
Peripherals	DMA, WDT
Number of I/O	85
Program Memory Size	384KB (384K x 8)
Program Memory Type	FLASH
EEPROM Size	-
RAM Size	31K x 8
Voltage - Supply (Vcc/Vdd)	3V ~ 5.5V
Data Converters	A/D 26x10b; D/A 2x8b
Oscillator Type	Internal
Operating Temperature	-40°C ~ 85°C (TA)
Mounting Type	Surface Mount
Package / Case	100-LQFP
Supplier Device Package	100-LFQFP (14x14)
Purchase URL	https://www.e-xfl.com/product-detail/renesas-electronics-america/m306nlfhgp-u3

Table 1.2 Functions and Specifications for M16C/6N Group (128-pin Version: M16C/6NN)

Item			Specification
CPU	Number of fundamental instructions		91 instructions
	Minimum instruction execution time		41.7ns (f(BCLK) = 24 MHz, 1/1 prescaler, without software wait)
	Operating mode		Single-chip, memory expansion and microprocessor modes
	Address space		1 Mbyte
	Memory capacity		Refer to **Table 1.3 Product Information**
Peripheral Function	Ports		Input/Output: 113 pins, Input: 1 pin
	Multifunction timers		Timer A: 16 bits × 5 channels Timer B: 16 bits × 6 channels Three-phase motor control circuit
	Serial interfaces		3 channels Clock synchronous, UART, I²C-bus (1), IEBus (2) 4 channels Clock synchronous
	A/D converter		10-bit A/D converter: 1 circuit, 26 channels
	D/A converter		8 bits × 2 channels
	DMAC		2 channels
	CRC calculation circuit		CRC-CCITT
	CAN module		1 channel with 2.0B specification
	Watchdog timer		15 bits × 1 channel (with prescaler)
	Interrupts		Internal: 32 sources, External: 12 sources Software: 4 sources, Priority levels: 7 levels
	Clock generation circuits		4 circuits • Main clock oscillation circuit (*) • Sub clock oscillation circuit (*) • On-chip oscillator • PLL frequency synthesizer (*) Equipped with on-chip feedback resistor
	Oscillation-stopped detector		Main clock oscillation stop and re-oscillation detection function
Electrical Characteristics	Supply voltage		VCC = 3.0 to 5.5 V (f(BCLK) = 24 MHz, 1/1 prescaler, without software wait)
	Consumption current	Mask ROM	19mA (f(BCLK) = 24 MHz, PLL operation, no division)
		Flash memory	21mA (f(BCLK) = 24 MHz, PLL operation, no division)
		Mask ROM	3μA (f(BCLK) = 32 kHz, Wait mode, Oscillation capacity Low)
		Flash memory	0.8μA (Stop mode, Topr = 25°C)
Flash Memory Version	Programming and erasure voltage		3.3 ± 0.3 V or 5.0 ± 0.5 V
	Programming and erasure endurance		100 times
I/O Characteristics	I/O withstand voltage		5.0 V
	Output current		5m A
Operating Ambient Temperature			-40 to 85°C
Device Configuration			CMOS high-performance silicon gate
Package			128-pin molded-plastic LQFP

NOTES:

1. I²C-bus is a trademark of Koninklijke Philips Electronics N.V.
2. IEBus is a trademark of NEC Electronics Corporation.

1.4 Product Information

Table 1.3 lists the Product Information and Figure 1.2 shows the Type Number, Memory Size, and Packages.

Table 1.3 Product Information As of Aug. 2006

Type No.	ROM Capacity	RAM Capacity	Package Type [2]	Remarks
M306NLFHGP	384 K + 4 Kbytes	31 Kbytes	PLQP0100KB-A	Flash memory version [1]
M306NNFHGP			PLQP0128KB-A	
M306NLFJGP	512 K + 4 Kbytes	31 Kbytes	PLQP0100KB-A	
M306NNFJGP			PLQP0128KB-A	
M306NLME-XXXGP	192 Kbytes	16 Kbytes	PLQP0100KB-A	Mask ROM version
M306NNME-XXXGP			PLQP0128KB-A	
M306NLMG-XXXGP	256 Kbytes	20 Kbytes	PLQP0100KB-A	
M306NNMG-XXXGP			PLQP0128KB-A	

NOTES:
1. Data flash memory provides an additional 4 Kbytes of ROM capacity (block A).
2. The correspondence between new and old package types is as follows.
   PLQP0100KB-A: 100P6Q-A
   PLQP0128KB-A: 128P6Q-A

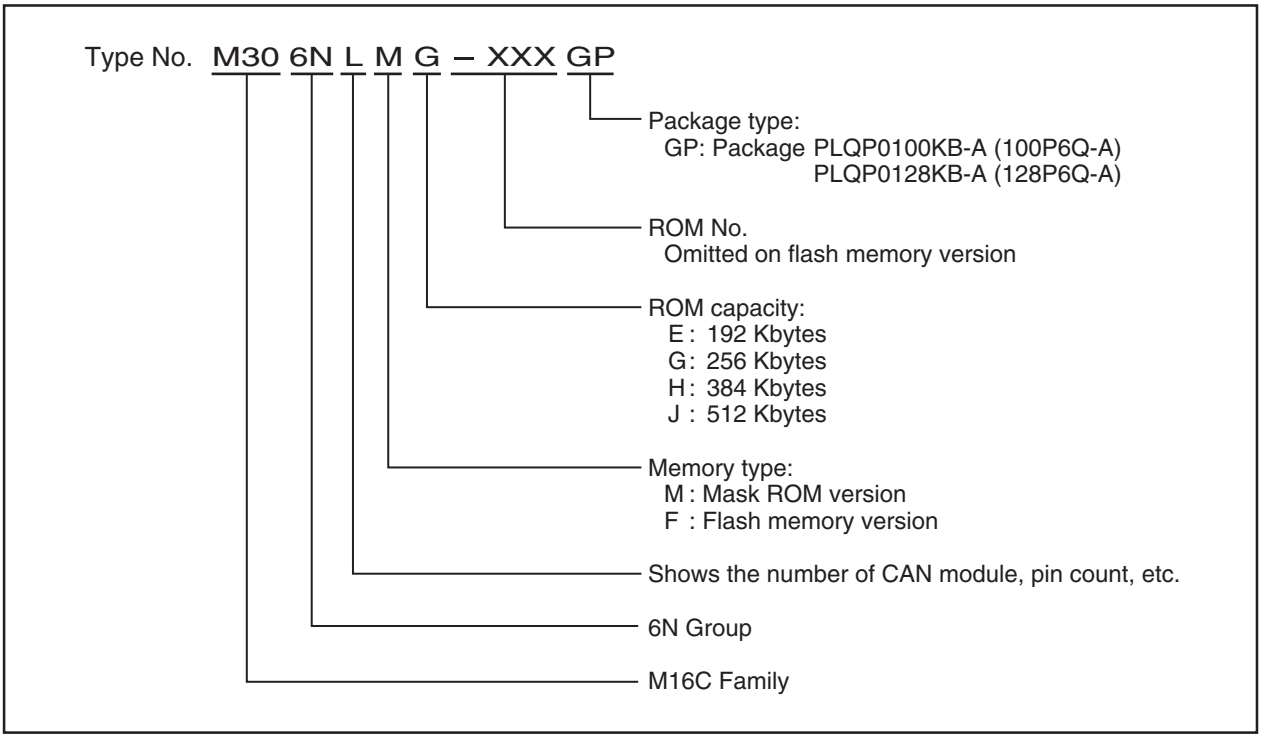

Figure 1.2 Type Number, Memory Size, and Package

Table 1.4 List of Pin Names for 100-Pin Package (1)

Pin No.	Control Pin	Port	Interrupt Pin	Timer Pin	UART Pin	Analog Pin	CAN Module Pin	Bus Control Pin
1		P9_4		TB4IN		DA1		
2		P9_3		TB3IN		DA0		
3		P9_2		TB2IN	SOUT3			
4		P9_1		TB1IN	SIN3			
5		P9_0		TB0IN	CLK3			
6	BYTE							
7	CNVSS							
8	XCIN	P8_7						
9	XCOUT	P8_6						
10	$\overline{\text{RESET}}$							
11	XOUT							
12	VSS							
13	XIN							
14	VCC1							
15		P8_5	$\overline{\text{NMI}}$					
16		P8_4	$\overline{\text{INT2}}$	ZP				
17		P8_3	$\overline{\text{INT1}}$					
18		P8_2	$\overline{\text{INT0}}$					
19		P8_1		TA4IN/$\overline{\text{U}}$				
20		P8_0		TA4OUT/U	(SIN4)			
21		P7_7		TA3IN				
22		P7_6		TA3OUT				
23		P7_5		TA2IN/$\overline{\text{W}}$	(SOUT4)			
24		P7_4		TA2OUT/W	(CLK4)			
25		P7_3		TA1IN/$\overline{\text{V}}$	$\overline{\text{CTS2}}$/$\overline{\text{RTS2}}$			
26		P7_2		TA1OUT/V	CLK2			
27		P7_1		TA0IN/TB5IN	RXD2/SCL2			
28		P7_0		TA0OUT	TXD2/SDA2			
29		P6_7			TXD1/SDA1			
30		P6_6			RXD1/SCL1			
31		P6_5			CLK1			
32		P6_4			$\overline{\text{CTS1}}$/$\overline{\text{RTS1}}$/$\overline{\text{CTS0}}$/CLKS1			
33		P6_3			TXD0/SDA0			
34		P6_2			RXD0/SCL0			
35		P6_1			CLK0			
36		P6_0			$\overline{\text{CTS0}}$/$\overline{\text{RTS0}}$			
37		P5_7						$\overline{\text{RDY}}$/CLKOUT
38		P5_6						ALE
39		P5_5						$\overline{\text{HOLD}}$
40		P5_4						$\overline{\text{HLDA}}$
41		P5_3						BCLK
42		P5_2						$\overline{\text{RD}}$
43		P5_1						$\overline{\text{WRH}}$/$\overline{\text{BHE}}$
44		P5_0						$\overline{\text{WRL}}$/$\overline{\text{WR}}$
45		P4_7						$\overline{\text{CS3}}$
46		P4_6						$\overline{\text{CS2}}$
47		P4_5						$\overline{\text{CS1}}$
48		P4_4						$\overline{\text{CS0}}$
49		P4_3						A19
50		P4_2						A18

Table 1.5 List of Pin Names for 100-Pin Package (2)

Pin No.	Control Pin	Port	Interrupt Pin	Timer Pin	UART Pin	Analog Pin	CAN Module Pin	Bus Control Pin
51		P4_1						A17
52		P4_0						A16
53		P3_7						A15
54		P3_6						A14
55		P3_5						A13
56		P3_4						A12
57		P3_3						A11
58		P3_2						A10
59		P3_1						A9
60	VCC2							
61		P3_0						A8(/-/D7)
62	VSS							
63		P2_7				AN2_7		A7(/D7/D6)
64		P2_6				AN2_6		A6(/D6/D5)
65		P2_5				AN2_5		A5(/D5/D4)
66		P2_4				AN2_4		A4(/D4/D3)
67		P2_3				AN2_3		A3(/D3/D2)
68		P2_2				AN2_2		A2(/D2/D1)
69		P2_1				AN2_1		A1(/D1/D0)
70		P2_0				AN2_0		A0(/D0/-)
71		P1_7	$\overline{\text{INT5}}$					D15
72		P1_6	$\overline{\text{INT4}}$					D14
73		P1_5	$\overline{\text{INT3}}$					D13
74		P1_4						D12
75		P1_3						D11
76		P1_2						D10
77		P1_1						D9
78		P1_0						D8
79		P0_7				AN0_7		D7
80		P0_6				AN0_6		D6
81		P0_5				AN0_5		D5
82		P0_4				AN0_4		D4
83		P0_3				AN0_3		D3
84		P0_2				AN0_2		D2
85		P0_1				AN0_1		D1
86		P0_0				AN0_0		D0
87		P10_7	$\overline{\text{KI3}}$			AN7		
88		P10_6	$\overline{\text{KI2}}$			AN6		
89		P10_5	$\overline{\text{KI1}}$			AN5		
90		P10_4	$\overline{\text{KI0}}$			AN4		
91		P10_3				AN3		
92		P10_2				AN2		
93		P10_1				AN1		
94	AVSS							
95		P10_0				AN0		
96	VREF							
97	AVCC							
98		P9_7			SIN4	$\overline{\text{ADTRG}}$		
99		P9_6			SOUT4	ANEX1	CTX0	
100		P9_5			CLK4	ANEX0	CRX0	

2.3 Frame Base Register (FB)

FB is configured with 16 bits, and is used for FB relative addressing.

2.4 Interrupt Table Register (INTB)

INTB is configured with 20 bits, indicating the start address of an interrupt vector table.

2.5 Program Counter (PC)

PC is configured with 20 bits, indicating the address of an instruction to be executed.

2.6 User Stack Pointer (USP), Interrupt Stack Pointer (ISP)

Stack pointer (SP) comes in two types: USP and ISP, each configured with 16 bits.
Your desired type of stack pointer (USP or ISP) can be selected by the U flag of FLG.

2.7 Static Base Register (SB)

SB is configured with 16 bits, and is used for SB relative addressing.

2.8 Flag Register (FLG)

FLG consists of 11 bits, indicating the CPU status.

2.8.1 Carry Flag (C Flag)

This flag retains a carry, borrow, or shift-out bit that has occurred in the arithmetic/logic unit.

2.8.2 Debug Flag (D Flag)

This flag is used exclusively for debugging purpose. During normal use, set to 0.

2.8.3 Zero Flag (Z Flag)

This flag is set to 1 when an arithmetic operation resulted in 0; otherwise, it is 0.

2.8.4 Sign Flag (S Flag)

This flag is set to 1 when an arithmetic operation resulted in a negative value; otherwise, it is 0.

2.8.5 Register Bank Select Flag (B Flag)

Register bank 0 is selected when this flag is 0; register bank 1 is selected when this flag is 1.

2.8.6 Overflow Flag (O Flag)

This flag is set to 1 when the operation resulted in an overflow; otherwise, it is 0.

2.8.7 Interrupt Enable Flag (I Flag)

This flag enables a maskable interrupt.
Maskable interrupts are disabled when the I flag is 0, and are enabled when the I flag is 1. The I flag is set to 0 when the interrupt request is accepted.

2.8.8 Stack Pointer Select Flag (U Flag)

ISP is selected when the U flag is 0; USP is selected when the U flag is 1.
The U flag is set to 0 when a hardware interrupt request is accepted or an INT instruction for software interrupt Nos. 0 to 31 is executed.

2.8.9 Processor Interrupt Priority Level (IPL)

IPL is configured with three bits, for specification of up to eight processor interrupt priority levels from level 0 to level 7.
If a requested interrupt has priority greater than IPL, the interrupt request is enabled.

2.8.10 Reserved Area

When white to this bit, write 0. When read, its content is undefined.

Table 4.2 SFR Information (2) [2]

Address	Register	Symbol	After Reset
0040h			
0041h	CAN0 Wake-up Interrupt Control Register	C01WKIC	XXXXX000b
0042h	CAN0 Successful Reception Interrupt Control Register	C0RECIC	XXXXX000b
0043h	CAN0 Successful Transmission Interrupt Control Register	C0TRMIC	XXXXX000b
0044h	INT3 Interrupt Control Register	INT3IC	XX00X000b
0045h	Timer B5 Interrupt Control Register	TB5IC	XXXXX000b
	SI/O5 Interrupt Control Register [1]	S5IC	
0046h	Timer B4 Interrupt Control Register	TB4IC	XXXXX000b
	UART1 Bus Collision Detection Interrupt Control Register	U1BCNIC	
0047h	Timer B3 Interrupt Control Register	TB3IC	XXXXX000b
	UART0 Bus Collision Detection Interrupt Control Register	U0BCNIC	
0048h	SI/O4 Interrupt Control Register	S4IC	XX00X000b
	INT5 Interrupt Control Register	INT5IC	
0049h	SI/O3 Interrupt Control Register	S3IC	XX00X000b
	INT4 Interrupt Control Register	INT4IC	
004Ah	UART2 Bus Collision Detection Interrupt Control Register	U2BCNIC	XXXXX000b
004Bh	DMA0 Interrupt Control Register	DM0IC	XXXXX000b
004Ch	DMA1 Interrupt Control Register	DM1IC	XXXXX000b
004Dh	CAN0 Error Interrupt Control Register	C01ERRIC	XXXXX000b
004Eh	A/D Conversion Interrupt Control Register	ADIC	XXXXX000b
	Key Input Interrupt Control Register	KUPIC	
004Fh	UART2 Transmit Interrupt Control Register	S2TIC	XXXXX000b
0050h	UART2 Receive Interrupt Control Register	S2RIC	XXXXX000b
0051h	UART0 Transmit Interrupt Control Register	S0TIC	XXXXX000b
0052h	UART0 Receive Interrupt Control Register	S0RIC	XXXXX000b
0053h	UART1 Transmit Interrupt Control Register	S1TIC	XXXXX000b
0054h	UART1 Receive Interrupt Control Register	S1RIC	XXXXX000b
0055h	Timer A0 Interrupt Control Register	TA0IC	XXXXX000b
0056h	Timer A1 Interrupt Control Register	TA1IC	XXXXX000b
0057h	Timer A2 Interrupt Control Register	TA2IC	XX00X000b
	INT7 Interrupt Control Register [1]	INT7IC	
0058h	Timer A3 Interrupt Control Register	TA3IC	XX00X000b
	INT6 Interrupt Control Register [1]	INT6IC	
0059h	Timer A4 Interrupt Control Register	TA4IC	XXXXX000b
005Ah	Timer B0 Interrupt Control Register	TB0IC	XXXXX000b
	SI/O6 Interrupt Control Register [1]	S6IC	
005Bh	Timer B1 Interrupt Control Register	TB1IC	XX00X000b
	INT8 Interrupt Control Register [1]	INT8IC	
005Ch	Timer B2 Interrupt Control Register	TB2IC	XXXXX000b
005Dh	INT0 Interrupt Control Register	INT0IC	XX00X000b
005Eh	INT1 Interrupt Control Register	INT1IC	XX00X000b
005Fh	INT2 Interrupt Control Register	INT2IC	XX00X000b
0060h	CAN0 Message Box 0: Identifier / DLC		XXh
0061h			XXh
0062h			XXh
0063h			XXh
0064h			XXh
0065h			XXh
0066h	CAN0 Message Box 0: Data Field		XXh
0067h			XXh
0068h			XXh
0069h			XXh
006Ah			XXh
006Bh			XXh
006Ch			XXh
006Dh			XXh
006Eh	CAN0 Message Box 0: Time Stamp		XXh
006Fh			XXh
0070h	CAN0 Message Box 1: Identifier / DLC		XXh
0071h			XXh
0072h			XXh
0073h			XXh
0074h			XXh
0075h			XXh
0076h	CAN0 Message Box 1: Data Field		XXh
0077h			XXh
0078h			XXh
0079h			XXh
007Ah			XXh
007Bh			XXh
007Ch			XXh
007Dh			XXh
007Eh	CAN0 Message Box 1: Time Stamp		XXh
007Fh			XXh

X: Undefined

NOTES:
1. These registers exist only in the 128-pin version.
2. Blank spaces are reserved. No access is allowed.

Table 4.6 SFR Information (6) [1]

Address	Register	Symbol	After Reset
0140h	CAN0 Message Box 14: Identifier /DLC		XXh
0141h			XXh
0142h			XXh
0143h			XXh
0144h			XXh
0145h			XXh
0146h	CAN0 Message Box 14: Data Field		XXh
0147h			XXh
0148h			XXh
0149h			XXh
014Ah			XXh
014Bh			XXh
014Ch			XXh
014Dh			XXh
014Eh	CAN0 Message Box 14: Time Stamp		XXh
014Fh			XXh
0150h	CAN0 Message Box 15: Identifier /DLC		XXh
0151h			XXh
0152h			XXh
0153h			XXh
0154h			XXh
0155h			XXh
0156h	CAN0 Message Box 15: Data Field		XXh
0157h			XXh
0158h			XXh
0159h			XXh
015Ah			XXh
015Bh			XXh
015Ch			XXh
015Dh			XXh
015Eh	CAN0 Message Box 15: Time Stamp		XXh
015Fh			XXh
0160h	CAN0 Global Mask Register	C0GMR	XXh
0161h			XXh
0162h			XXh
0163h			XXh
0164h			XXh
0165h			XXh
0166h	CAN0 Local Mask A Register	C0LMAR	XXh
0167h			XXh
0168h			XXh
0169h			XXh
016Ah			XXh
016Bh			XXh
016Ch	CAN0 Local Mask B Register	C0LMBR	XXh
016Dh			XXh
016Eh			XXh
016Fh			XXh
0170h			XXh
0171h			XXh
0172h			
0173h			
0174h			
0175h			
0176h			
0177h			
0178h			
0179h			
017Ah			
017Bh			
017Ch			
017Dh			
017Eh			
017Fh			

X: Undefined

NOTE:
1. Blank spaces are reserved. No access is allowed.

Table 5.2 Recommended Operating Conditions (1) [1]

Symbol	Parameter		Standard			Unit
			Min.	Typ.	Max.	
V_{CC}	Supply voltage (VCC1 = VCC2)		3.0	5.0	5.5	V
AV_{CC}	Analog supply voltage			V_{CC}		V
V_{SS}	Supply voltage			0		V
AV_{SS}	Analog supply voltage			0		V
V_{IH}	HIGH input voltage	P3_1 to P3_7, P4_0 to P4_7, P5_0 to P5_7, P6_0 to P6_7, P7_0, P7_2 to P7_7, P8_0 to P8_7, P9_0, P9_2 to P9_7, P10_0 to P10_7, P11_0 to P11_7, P12_0 to P12_7, P13_0 to P13_7, P14_0, P14_1, XIN, $\overline{RESET}$, CNVSS, BYTE	0.8 V_{CC}		V_{CC}	V
		P7_1, P9_1	0.8 V_{CC}		6.5	V
		P0_0 to P0_7, P1_0 to P1_7, P2_0 to P2_7, P3_0 (During single-chip mode)	0.8 V_{CC}		V_{CC}	V
		P0_0 to P0_7, P1_0 to P1_7, P2_0 to P2_7, P3_0 (Data input during memory expansion and microprocessor modes)	0.5 V_{CC}		V_{CC}	
V_{IL}	LOW input voltage	P3_1 to P3_7, P4_0 to P4_7, P5_0 to P5_7, P6_0 to P6_7, P7_0 to P7_7, P8_0 to P8_7, P9_0 to P9_7, P10_0 to P10_7, P11_0 to P11_7, P12_0 to P12_7, P13_0 to P13_7, P14_0, P14_1, XIN, $\overline{RESET}$, CNVSS, BYTE	0		0.2 V_{CC}	V V
		P0_0 to P0_7, P1_0 to P1_7, P2_0 to P2_7, P3_0 (During single-chip mode)	0		0.2 V_{CC}	V
		P0_0 to P0_7, P1_0 to P1_7, P2_0 to P2_7, P3_0 (Data input during memory expansion and microprocessor modes)	0		0.16 V_{CC}	V
$I_{OH(peak)}$	HIGH peak output current	P0_0 to P0_7, P1_0 to P1_7, P2_0 to P2_7, P3_0 to P3_7, P4_0 to P4_7, P5_0 to P5_7, P6_0 to P6_7, P7_0, P7_2 to P7_7, P8_0 to P8_4, P8_6, P8_7, P9_0, P9_2 to P9_7, P10_0 to P10_7, P11_0 to P11_7, P12_0 to P12_7, P13_0 to P13_7, P14_0, P14_1			–10.0	mA
$I_{OH(avg)}$	HIGH average output current	P0_0 to P0_7, P1_0 to P1_7, P2_0 to P2_7, P3_0 to P3_7, P4_0 to P4_7, P5_0 to P5_7, P6_0 to P6_7, P7_0, P7_2 to P7_7, P8_0 to P8_4, P8_6, P8_7, P9_0, P9_2 to P9_7, P10_0 to P10_7, P11_0 to P11_7, P12_0 to P12_7, P13_0 to P13_7, P14_0, P14_1			–5.0	mA
$I_{OL(peak)}$	LOW peak output current	P0_0 to P0_7, P1_0 to P1_7, P2_0 to P2_7, P3_0 to P3_7, P4_0 to P4_7, P5_0 to P5_7, P6_0 to P6_7, P7_0 to P7_7, P8_0 to P8_4, P8_6, P8_7, P9_0 to P9_7, P10_0 to P10_7, P11_0 to P11_7, P12_0 to P12_7, P13_0 to P13_7, P14_0, P14_1			10.0	mA
$I_{OL(avg)}$	LOW average output current	P0_0 to P0_7, P1_0 to P1_7, P2_0 to P2_7, P3_0 to P3_7, P4_0 to P4_7, P5_0 to P5_7, P6_0 to P6_7, P7_0 to P7_7, P8_0 to P8_4, P8_6, P8_7, P9_0 to P9_7, P10_0 to P10_7, P11_0 to P11_7, P12_0 to P12_7, P13_0 to P13_7, P14_0, P14_1			5.0	mA

NOTES:
1. Referenced to VCC = 3.0 to 5.5 V at Topr = –40 to 85°C unless otherwise specified.
2. Average output current values during 100 ms period.
3. The total $I_{OL(peak)}$ for ports P0, P1, P2, P8_6, P8_7, P9, P10, P11, P14_0, and P14_1 must be 80 mA max.
   The total $I_{OL(peak)}$ for ports P3, P4, P5, P6, P7, P8_0 to P8_4, P12, and P13 must be 80 mA max.
   The total $I_{OH(peak)}$ for ports P0, P1, and P2 must be –40 mA max.
   The total $I_{OH(peak)}$ for ports P3, P4, P5, P12, and P13 must be –40 mA max.
   The total $I_{OH(peak)}$ for ports P6, P7, and P8_0 to P8_4 must be –40 mA max.
   The total $I_{OH(peak)}$ for ports P8_6, P8_7, P9, P10, P11, P14_0, and P14_1 must be –40 mA max.
4. P11 to P14 are only in the 128-pin version.

Switching Characteristics

VCC = 5 V

(Referenced to VCC = 5 V, VSS = 0 V, at Topr = –40 to 85 °C unless otherwise specified)

Table 5.25 Memory Expansion Mode and Microprocessor Mode (for setting with no wait)

Symbol	Parameter	Measuring Condition	Standard		Unit
			Min.	Max.	
$t_{d(BCLK-AD)}$	Address output delay time	Figure 5.2		25	ns
$t_{h(BCLK-AD)}$	Address output hold time (in relation to BCLK)		4		ns
$t_{h(RD-AD)}$	Address output hold time (in relation to RD)		0		ns
$t_{h(WR-AD)}$	Address output hold time (in relation to WR)		(NOTE 1)		ns
$t_{d(BCLK-CS)}$	Chip select output delay time			25	ns
$t_{h(BCLK-CS)}$	Chip select output hold time (rin relation to BCLK)		4		ns
$t_{d(BCLK-ALE)}$	ALE signal output delay time			15	ns
$t_{h(BCLK-ALE)}$	ALE signal output hold time		–4		ns
$t_{d(BCLK-RD)}$	RD signal output delay time			25	ns
$t_{h(BCLK-RD)}$	RD signal output hold time		0		ns
$t_{d(BCLK-WR)}$	WR signal output delay time			25	ns
$t_{h(BCLK-WR)}$	WR signal output hold time		0		ns
$t_{d(BCLK-DB)}$	Data output delay time (in relation to BCLK)			40	ns
$t_{h(BCLK-DB)}$	Data output hold time (in relation to BCLK) (3)		4		ns
$t_{d(DB-WR)}$	Data output delay time (in relation to WR)		(NOTE 2)		ns
$t_{h(WR-DB)}$	Data output hold time (rin relation to WR) (3)		(NOTE 1)		ns
$t_{d(BCLK-HLDA)}$	$\overline{HLDA}$ output delay time			40	ns

NOTES:

1. Calculated according to the BCLK frequency as follows:

$$\frac{0.5 \times 10^9}{f(BCLK)} - 10 \text{ [ns]}$$

2. Calculated according to the BCLK frequency as follows:

$$\frac{0.5 \times 10^9}{f(BCLK)} - 40 \text{ [ns]} \qquad f(BCLK) \text{ is 12.5 MHz or less.}$$

3. This standard value shows the timing when the output is off, and does not show hold time of data bus.
   Hold time of data bus varies with capacitor volume and pull-up (pull-down) resistance value.
   Hold time of data bus is expressed in
   $t = -CR \times \ln(1 - V_{OL} / V_{CC})$
   by a circuit of the right figure.
   For example, when $V_{OL} = 0.2\ V_{CC}$, C = 30 pF, R = 1 kΩ, hold time of output "L" level is
   $t = -30\text{ pF} \times 1\text{ k}\Omega \times \ln(1 - 0.2\ V_{CC} / V_{CC}) = 6.7$ ns.

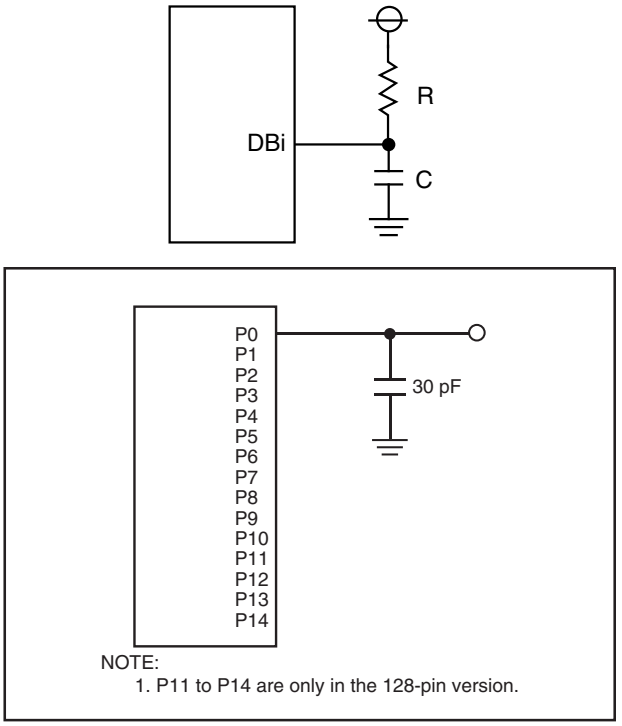

Figure 5.2 Port P0 to P14 Measurement Circuit

Memory Expansion Mode and Microprocessor Mode **VCC = 5 V**

(Effective for setting with wait)

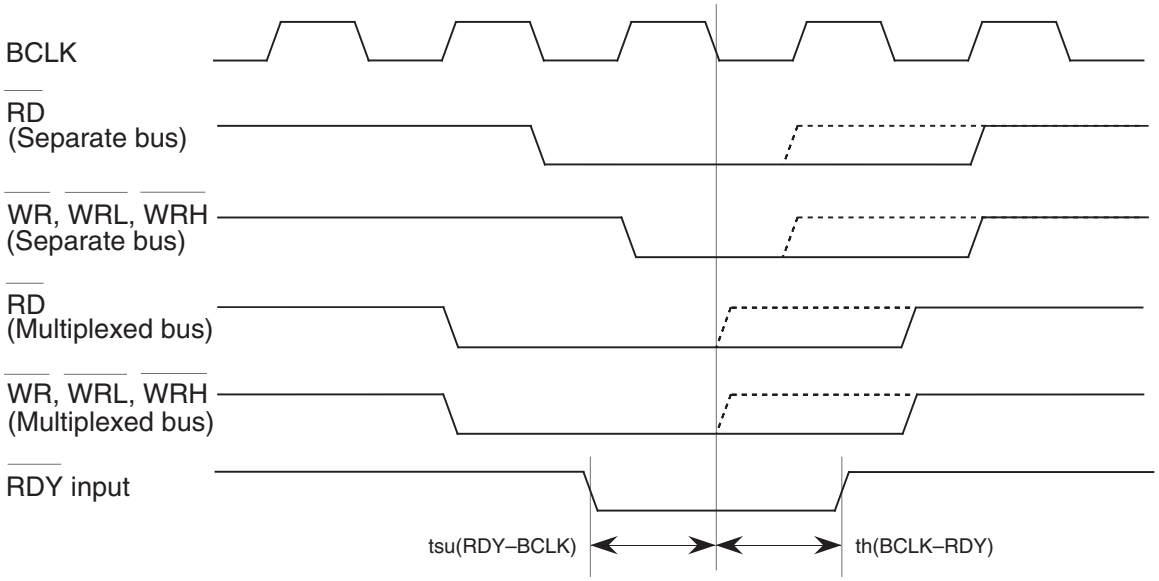

(Common to setting with wait and setting without wait)

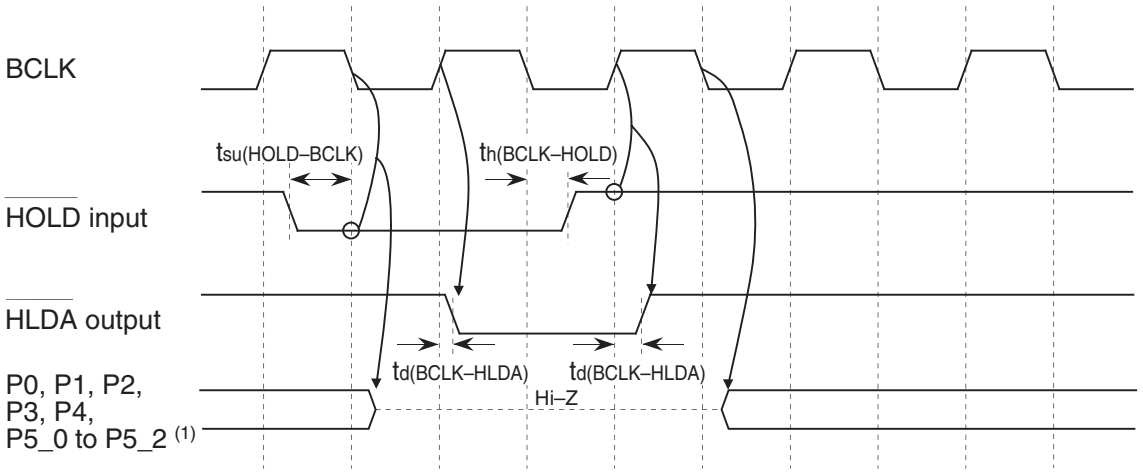

NOTE:
1. The above pins are set to high-impedance regardless of the input level of the BYTE pin, the PM06 bit in the PM0 register, and the PM11 bit in the PM1 register.

Measuring conditions :
- VCC = 5 V
- Input timing voltage : Determined with V_{IL} = 1.0 V, V_{IH} = 4.0 V
- Output timing voltage: Determined with V_{OL} = 2.5 V, V_{OH} = 2.5 V

Figure 5.4 Timing Diagram (2)

Memory Expansion Mode and Microprocessor Mode

VCC = 5 V

(For 3-wait setting and external area access)

Read timing

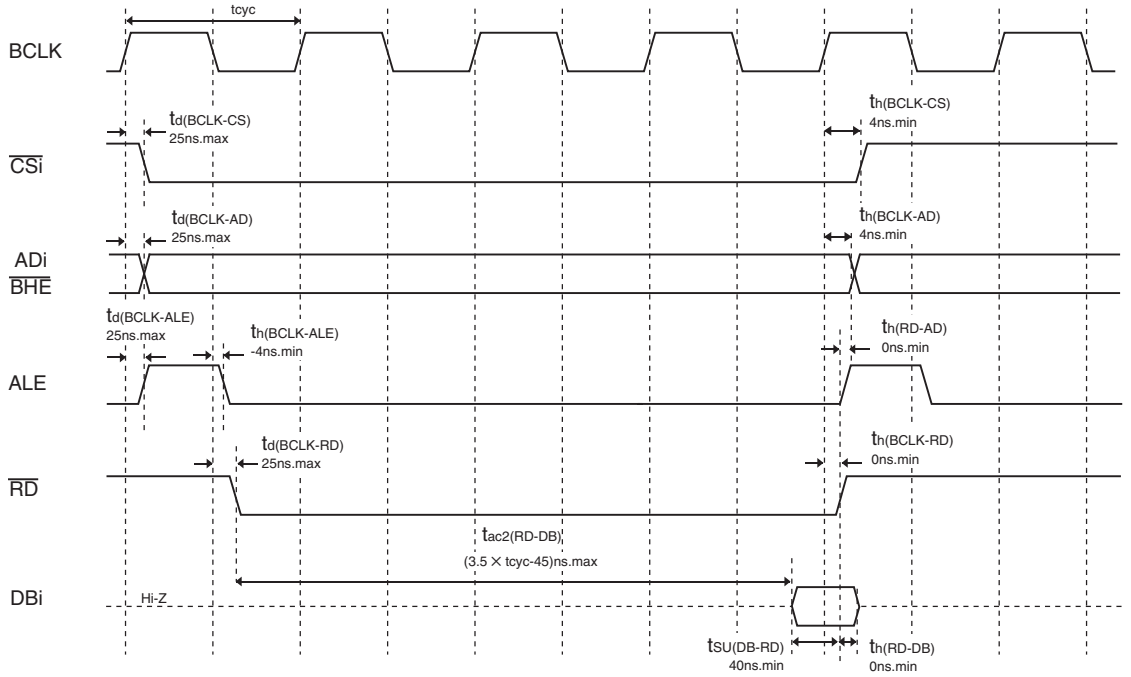

Write timing

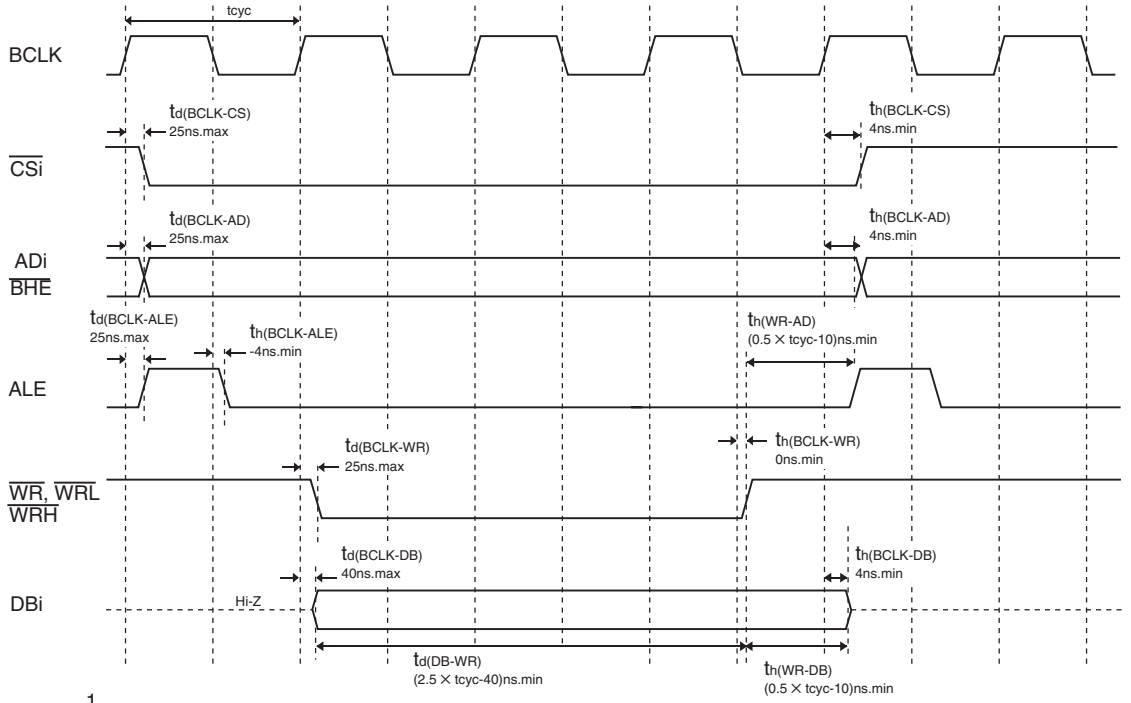

$$tcyc = \frac{1}{f(BCLK)}$$

Measuring conditions :

- VCC = 5 V
- Input timing voltage : V_{IL} = 0.8 V, V_{IH} = 2.0 V
- Output timing voltage : V_{OL} = 0.4 V, V_{OH} = 2.4 V

Figure 5.8 Timing Diagram (6)

Memory Expansion Mode and Microprocessor Mode — VCC = 5 V

(For 1- or 2-wait setting, external area access and multiplexed bus selection)

Read timing

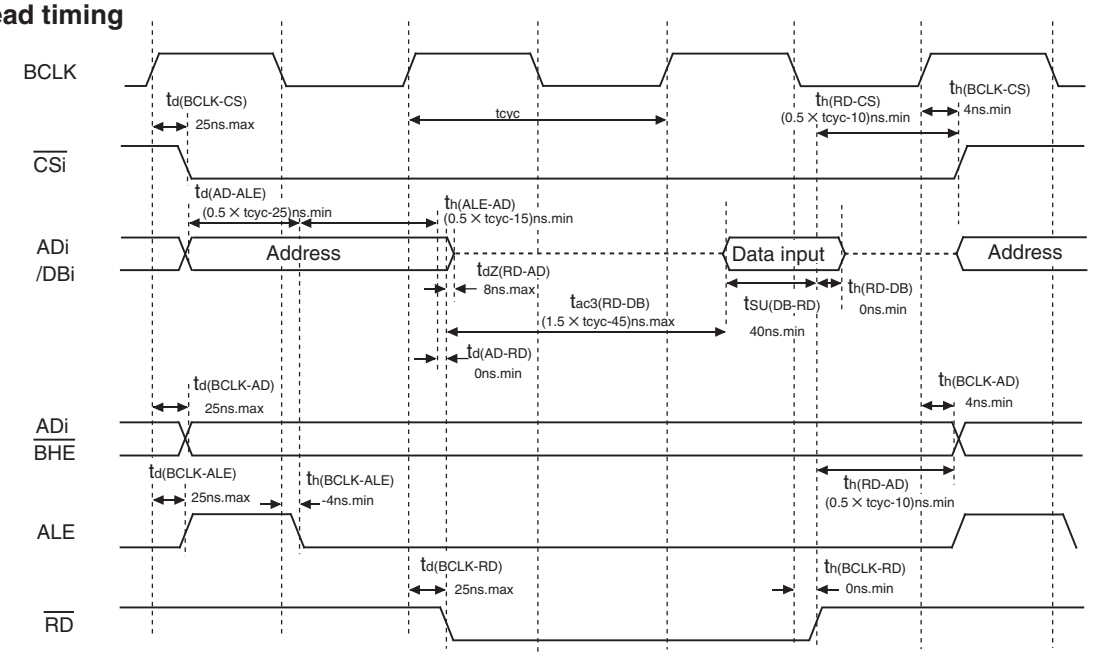

Write timing

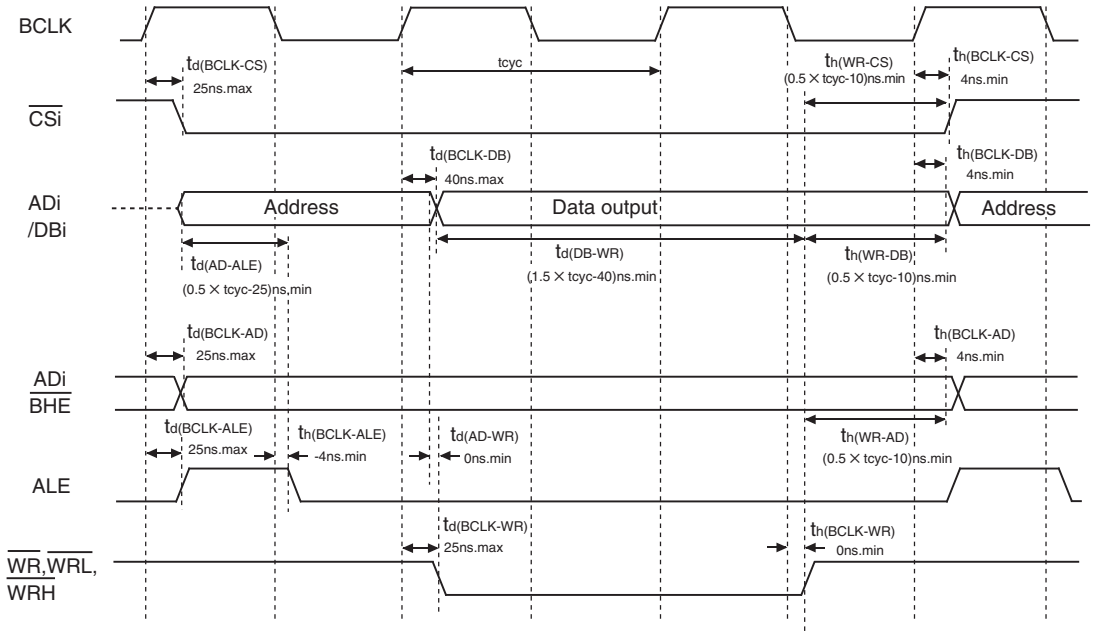

$$tcyc = \frac{1}{f(BCLK)}$$

Measuring conditions :
- VCC = 5 V
- Input timing voltage : V_{IL} = 0.8 V, V_{IH} = 2.0 V
- Output timing voltage : V_{OL} = 0.4 V, V_{OH} = 2.4 V

Figure 5.9 Timing Diagram (7)

Timing Requirements **VCC = 3.3 V**

(Referenced to VCC = 3.3 V, VSS = 0 V, at Topr = –40 to 85°C unless otherwise specified)

Table 5.29 External Clock Input (XIN Input)

Symbol	Parameter	Standard		Unit
		Min.	Max.	
t_c	External clock input cycle time	62.5		ns
$t_{w(H)}$	External clock input HIGH pulse width	25		ns
$t_{w(L)}$	External clock input LOW pulse width	25		ns
t_r	External clock rise time		15	ns
t_f	External clock fall time		15	ns

Table 5.30 Memory Expansion Mode and Microprocessor Mode

Symbol	Parameter	Standard		Unit
		Min.	Max.	
$t_{ac1(RD-DB)}$	Data input access time (for setting with no wait)		(NOTE 1)	ns
$t_{ac2(RD-DB)}$	Data input access time (for setting with wait)		(NOTE 2)	ns
$t_{ac3(RD-DB)}$	Data input access time (when accessing multiplexed bus area)		(NOTE 3)	ns
$t_{su(DB-RD)}$	Data input setup time	50		ns
$t_{su(RDY-BCLK)}$	$\overline{RDY}$ input setup time	40		ns
$t_{su(HOLD-BCLK)}$	$\overline{HOLD}$ input setup time	50		ns
$t_{h(RD-DB)}$	Data input hold time	0		ns
$t_{h(BCLK-RDY)}$	$\overline{RDY}$ input hold time	0		ns
$t_{h(BCLK-HOLD)}$	$\overline{HOLD}$ input hold time	0		ns

NOTES:

1. Calculated according to the BCLK frequency as follows:

$$\frac{0.5 \times 10^9}{f(BCLK)} - 60 \text{ [ns]}$$

2. Calculated according to the BCLK frequency as follows:

$$\frac{(n - 0.5) \times 10^9}{f(BCLK)} - 60 \text{ [ns]}$$

n is “2” for 1-wait setting, “3” for 2-wait setting and “4” for 3-wait setting.

3. Calculated according to the BCLK frequency as follows:

$$\frac{(n - 0.5) \times 10^9}{f(BCLK)} - 60 \text{ [ns]}$$

n is “2” for 2-wait setting, “3” for 3-wait setting.

Timing Requirements **VCC = 3.3 V**

(Referenced to VCC = 3.3 V, VSS = 0 V, at Topr = –40 to 85°C unless otherwise specified)

Table 5.37 Timer B Input (Counter Input in Event Counter Mode)

Symbol	Parameter	Standard		Unit
		Min.	Max.	
$t_{c(TB)}$	TBiIN input cycle time (counted on one edge)	150		ns
$t_{w(TBH)}$	TBiIN input HIGH pulse width (counted on one edge)	60		ns
$t_{w(TBL)}$	TBiIN input LOW pulse width (counted on one edge)	60		ns
$t_{c(TB)}$	TBiIN input cycle time (counted on both edges)	300		ns
$t_{w(TBH)}$	TBiIN input HIGH pulse width (counted on both edges)	120		ns
$t_{w(TBL)}$	TBiIN input LOW pulse width (counted on both edges)	120		ns

Table 5.38 Timer B Input (Pulse Period Measurement Mode)

Symbol	Parameter	Standard		Unit
		Min.	Max.	
$t_{c(TB)}$	TBiIN input cycle time	600		ns
$t_{w(TBH)}$	TBiIN input HIGH pulse width	300		ns
$t_{w(TBL)}$	TBiIN input LOW pulse width	300		ns

Table 5.39 Timer B Input (Pulse Width Measurement Mode)

Symbol	Parameter	Standard		Unit
		Min.	Max.	
$t_{c(TB)}$	TBiIN input cycle time	600		ns
$t_{w(TBH)}$	TBiIN input HIGH pulse width	300		ns
$t_{w(TBL)}$	TBiIN input LOW pulse width	300		ns

Table 5.40 A/D Trigger Input

Symbol	Parameter	Standard		Unit
		Min.	Max.	
$t_{C(AD)}$	$\overline{ADTRG}$ input cycle time (trigger able minimum)	1500		ns
$t_{w(ADL)}$	$\overline{ADTRG}$ input LOW pulse width	200		ns

Table 5.41 Serial Interface

Symbol	Parameter	Standard		Unit
		Min.	Max.	
$t_{c(CK)}$	CLKi input cycle time	300		ns
$t_{w(CKH)}$	CLKi input HIGH pulse width	150		ns
$t_{w(CKL)}$	CLKi input LOW pulse width	150		ns
$t_{d(C-Q)}$	TXDi output delay time		160	ns
$t_{h(C-Q)}$	TXDi hold time	0		ns
$t_{su(D-C)}$	RXDi input setup time	100		ns
$t_{h(C-D)}$	RXDi input hold time	90		ns

Table 5.42 External Interrupt $\overline{INTi}$ Input

Symbol	Parameter	Standard		Unit
		Min.	Max.	
$t_{w(INH)}$	$\overline{INTi}$ input HIGH pulse width	380		ns
$t_{w(INL)}$	$\overline{INTi}$ input LOW pulse width	380		ns

Switching Characteristics **VCC = 3.3 V**

(Referenced to VCC = 3.3 V, VSS = 0 V, at Topr = –40 to 85 °C unless otherwise specified)

Table 5.43 Memory Expansion Mode and Microprocessor Mode (for setting with no wait)

Symbol	Parameter	Measuring Condition	Standard		Unit
			Min.	Max.	
$t_{d(BCLK-AD)}$	Address output delay time	Figure 5.11		30	ns
$t_{h(BCLK-AD)}$	Address output hold time (in relation to BCLK)		4		ns
$t_{h(RD-AD)}$	Address output hold time (in relation to RD)		0		ns
$t_{h(WR-AD)}$	Address output hold time (in relation to WR)		(NOTE 1)		ns
$t_{d(BCLK-CS)}$	Chip select output delay time			30	ns
$t_{h(BCLK-CS)}$	Chip select output hold time (in relation to BCLK)		4		ns
$t_{d(BCLK-ALE)}$	ALE signal output delay time			25	ns
$t_{h(BCLK-ALE)}$	ALE signal output hold time		–4		ns
$t_{d(BCLK-RD)}$	RD signal output delay time			30	ns
$t_{h(BCLK-RD)}$	RD signal output hold time		0		ns
$t_{d(BCLK-WR)}$	WR signal output delay time			30	ns
$t_{h(BCLK-WR)}$	WR signal output hold time		0		ns
$t_{d(BCLK-DB)}$	Data output delay time (in relation to BCLK)			40	ns
$t_{h(BCLK-DB)}$	Data output hold time (in relation to BCLK) (3)		4		ns
$t_{d(DB-WR)}$	Data output delay time (in relation to WR)		(NOTE 2)		ns
$t_{h(WR-DB)}$	Data output hold time (in relation to WR) (3)		(NOTE 1)		ns
$t_{d(BCLK-HLDA)}$	$\overline{HLDA}$ output delay time			40	ns

NOTES:

1. Calculated according to the BCLK frequency as follows:

$$\frac{0.5 \times 10^9}{f(BCLK)} - 10 \text{ [ns]}$$

2. Calculated according to the BCLK frequency as follows:

$$\frac{0.5 \times 10^9}{f(BCLK)} - 40 \text{ [ns]} \qquad f(BCLK) \text{ is 12.5 MHz or less.}$$

3. This standard value shows the timing when the output is off, and does not show hold time of data bus.
Hold time of data bus varies with capacitor volume and pull-up (pull-down) resistance value.
Hold time of data bus is expressed in
$t = -CR \times \ln(1 - V_{OL} / V_{CC})$
by a circuit of the right figure.
For example, when $V_{OL} = 0.2\ V_{CC}$, C = 30 pF, R = 1 kΩ, hold time of output "L" level is
$t = -30\text{ pF} \times 1\text{ k}\Omega \times \ln(1 - 0.2\ V_{CC} / V_{CC}) = 6.7$ ns.

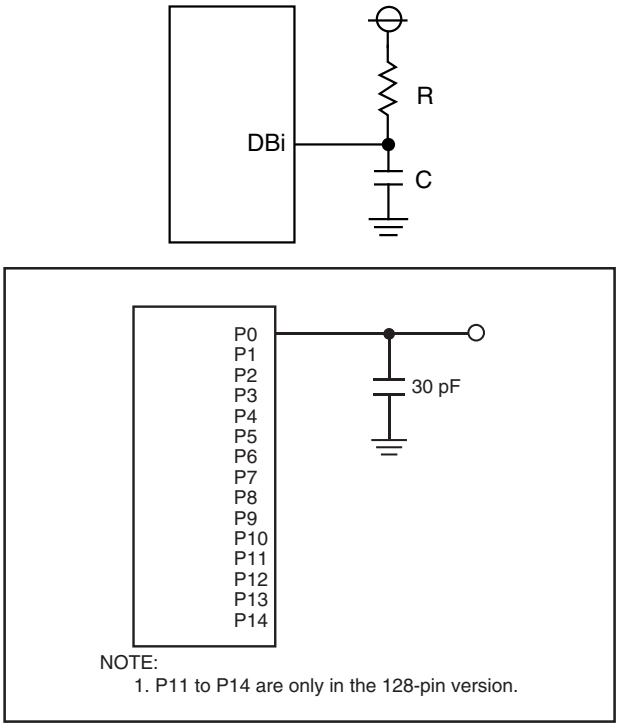

Figure 5.11 Port P0 to P14 Measurement Circuit

Memory Expansion Mode and Microprocessor Mode

VCC = 3.3 V

(For setting with no wait)

Read timing

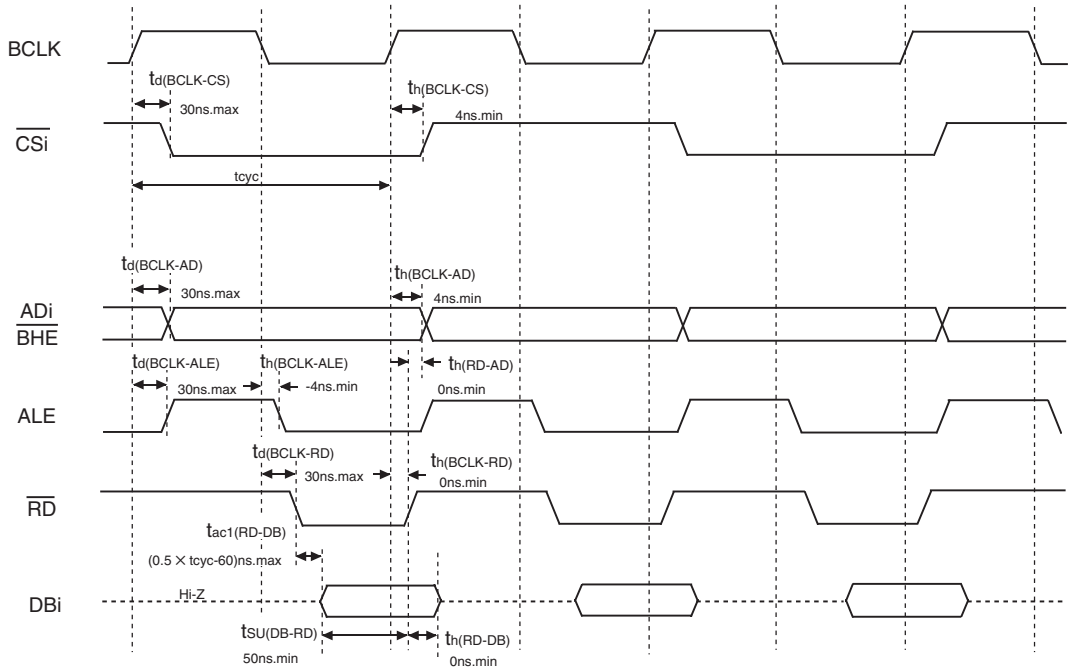

Write timing

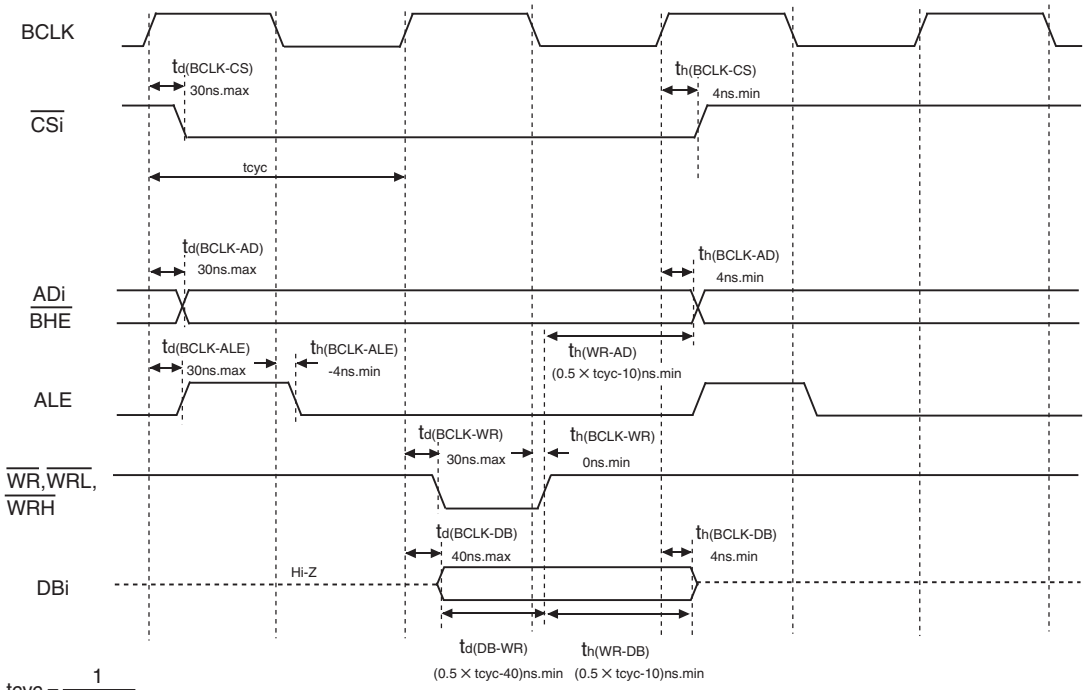

$$tcyc = \frac{1}{f(BCLK)}$$

Measuring conditions :
- VCC = 3.3 V
- Input timing voltage : V_{IL} = 0.6 V, V_{IH} = 2.7 V
- Output timing voltage : V_{OL} = 1.65 V, V_{OH} = 1.65 V

Figure 5.14 Timing Diagram (3)

Memory Expansion Mode and Microprocessor Mode

VCC = 3.3 V

(For 2-wait setting and external area access)

Read timing

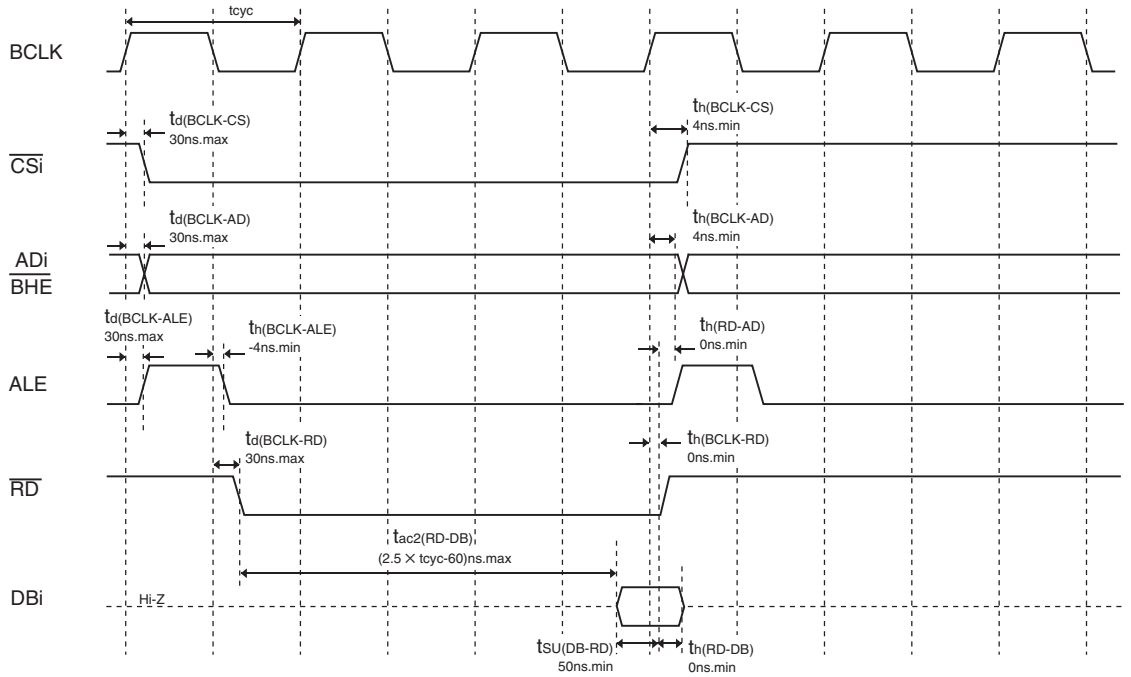

Write timing

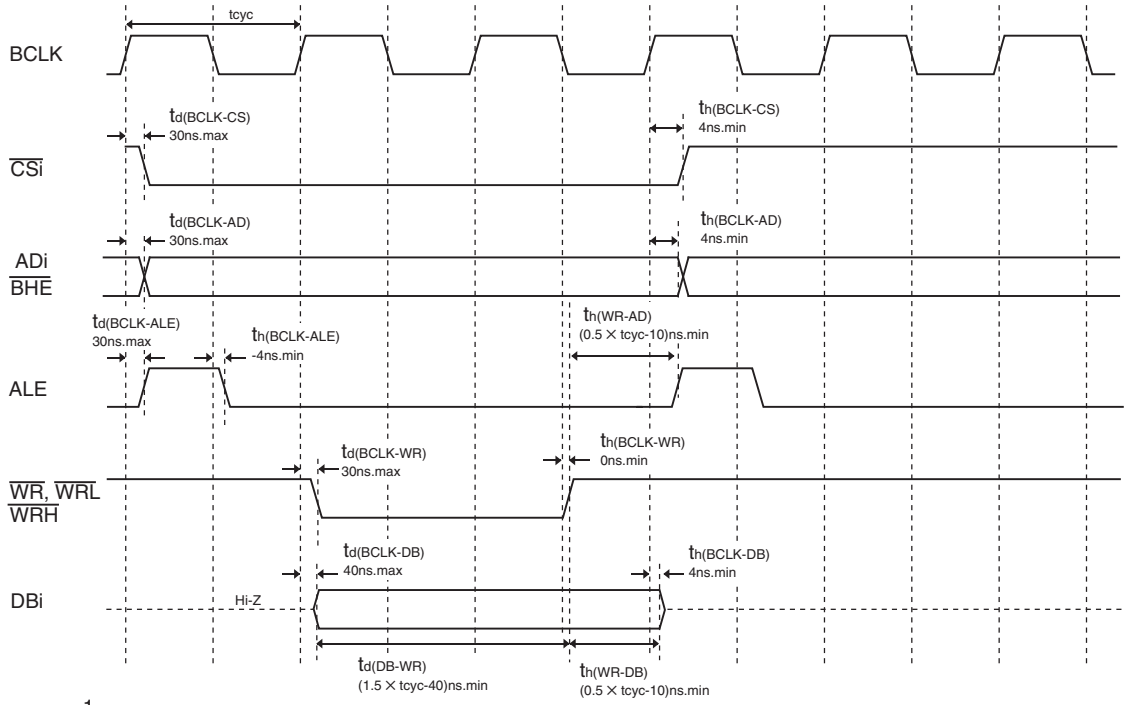

$$tcyc = \frac{1}{f(BCLK)}$$

Measuring conditions :

- VCC = 3.3 V
- Input timing voltage : V_{IL} = 0.6 V, V_{IH} = 2.7 V
- Output timing voltage : V_{OL} = 1.65 V, V_{OH} = 1.65 V

Figure 5.16 Timing Diagram (5)

Memory Expansion Mode and Microprocessor Mode — VCC = 3.3 V

(For 3-wait setting, external area access and multiplexed bus selection)

Read timing

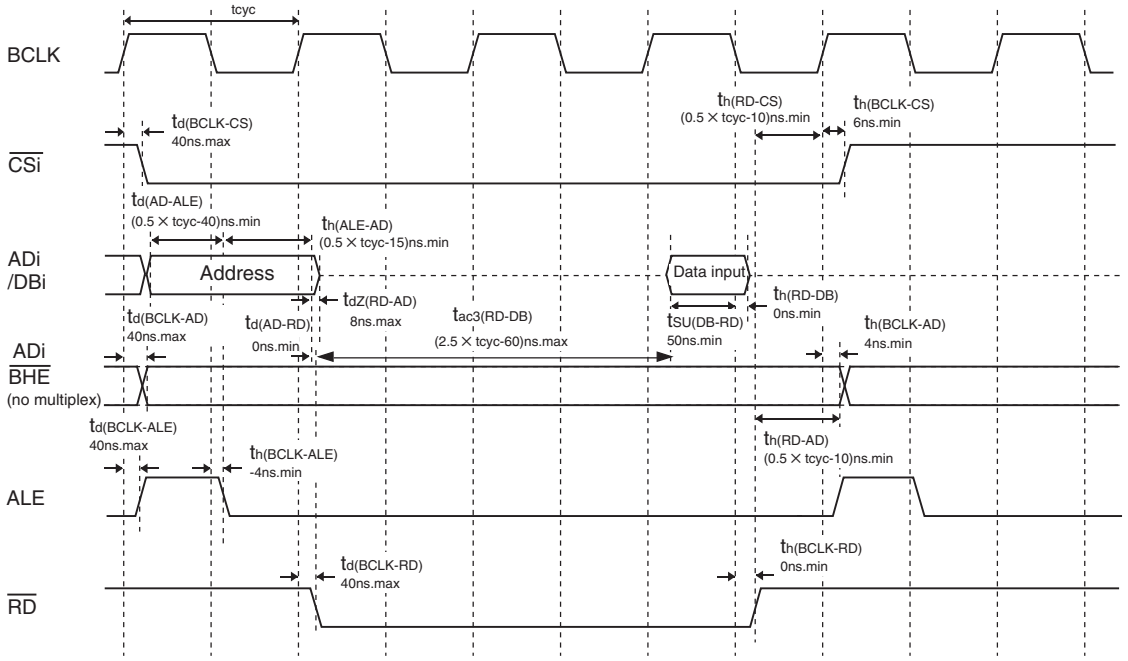

Write timing

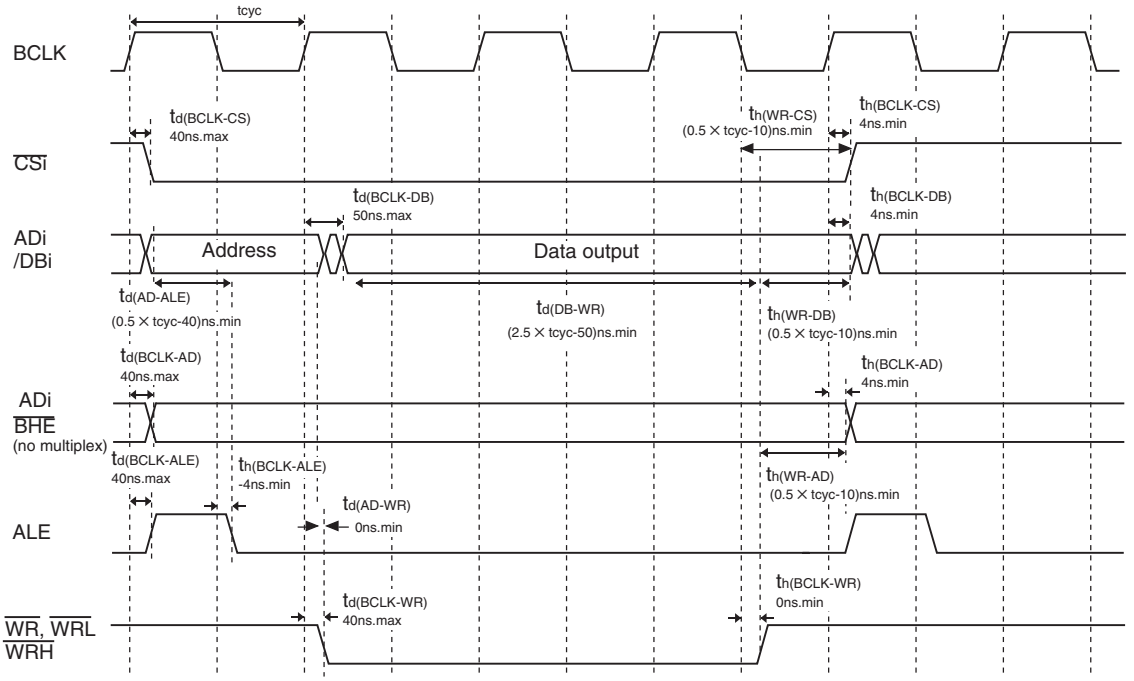

$$tcyc = \frac{1}{f(BCLK)}$$

Measuring conditions :
- VCC = 3.3 V
- Input timing voltage : V_{IL} = 0.6 V, V_{IH} = 2.7 V
- Output timing voltage : V_{OL} = 1.65 V, V_{OH} = 1.65 V

Figure 5.19 Timing Diagram (8)