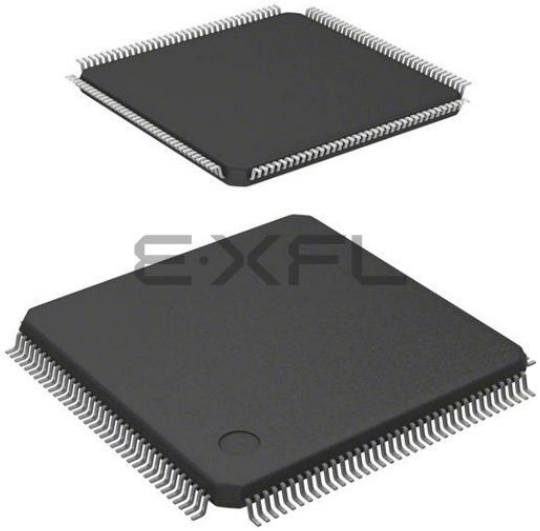

Welcome to E-XFL.COM

What is "Embedded - Microcontrollers"?

"Embedded - Microcontrollers" refer to small, integrated circuits designed to perform specific tasks within larger systems. These microcontrollers are essentially compact computers on a single chip, containing a processor core, memory, and programmable input/output peripherals. They are called "embedded" because they are embedded within electronic devices to control various functions, rather than serving as standalone computers. Microcontrollers are crucial in modern electronics, providing the intelligence and control needed for a wide range of applications.

Applications of "Embedded - Microcontrollers"

Details	
Product Status	Active
Core Processor	e200z4d
Core Size	32-Bit Single-Core
Speed	120MHz
Connectivity	CANbus, LINbus, SCI, SPI, UART/USART
Peripherals	DMA, LVD, POR, PWM, WDT
Number of I/O	96
Program Memory Size	1MB (1M x 8)
Program Memory Type	FLASH
EEPROM Size	-
RAM Size	128K x 8
Voltage - Supply (Vcc/Vdd)	3V ~ 3.63V
Data Converters	A/D 32x12b
Oscillator Type	Internal
Operating Temperature	-40°C ~ 105°C (TA)
Mounting Type	Surface Mount
Package / Case	144-LQFP
Supplier Device Package	144-LQFP (20x20)
Purchase URL	https://www.e-xfl.com/product-detail/stmicroelectronics/spc564l60l5bcoqr

Contents

1 Introduction 7

1.1 Document overview 7

1.2 Description 7

1.3 Device comparison 8

1.4 Block diagram 10

1.5 Feature details 14

1.5.1 High-performance e200z4d core 14

1.5.2 Crossbar switch (XBAR) 15

1.5.3 Memory Protection Unit (MPU) 15

1.5.4 Enhanced Direct Memory Access (eDMA) 15

1.5.5 On-chip flash memory with ECC 16

1.5.6 On-chip SRAM with ECC 16

1.5.7 Platform flash memory controller 17

1.5.8 Platform Static RAM Controller (SRAMC) 17

1.5.9 Memory subsystem access time 18

1.5.10 Error Correction Status Module (ECSM) 18

1.5.11 Peripheral bridge (PBRIDGE) 19

1.5.12 Interrupt Controller (INTC) 19

1.5.13 System clocks and clock generation 20

1.5.14 Frequency-Modulated Phase-Locked Loop (FMPLL) 21

1.5.15 Main oscillator 21

1.5.16 Internal Reference Clock (RC) oscillator 21

1.5.17 Clock, reset, power, mode and test control modules (MC_CGM, MC_RGM, MC_PCU, and MC_ME) 22

1.5.18 Periodic Interrupt Timer Module (PIT) 22

1.5.19 System Timer Module (STM) 22

1.5.20 Software Watchdog Timer (SWT) 22

1.5.21 Fault Collection and Control Unit (FCCU) 23

1.5.22 System Integration Unit Lite (SIUL) 23

1.5.23 Non-Maskable Interrupt (NMI) 23

1.5.24 Boot Assist Module (BAM) 23

1.5.25 System Status and Configuration Module (SSCM) 24

1.5.26 FlexCAN 24

1.5.27 FlexRay 25

3.13 Main oscillator electrical characteristics 116
3.14 FMPLL electrical characteristics 118
3.15 16 MHz RC oscillator electrical characteristics 119
3.16 ADC electrical characteristics 119
3.16.1 Input Impedance and ADC Accuracy 120
3.17 Flash memory electrical characteristics 125
3.18 SWG electrical characteristics 127
3.19 AC specifications 127
3.19.1 Pad AC specifications 127
3.20 Reset sequence 128
3.20.1 Reset sequence duration 128
3.20.2 Reset sequence description 129
3.20.3 Reset sequence trigger mapping 131
3.20.4 Reset sequence — start condition 132
3.20.5 External watchdog window 134
3.21 AC timing characteristics 134
3.21.1 RESET pin characteristics 134
3.21.2 WKUP/NMI timing 136
3.21.3 IEEE 1149.1 JTAG interface timing 136
3.21.4 Nexus timing 138
3.21.5 External interrupt timing (IRQ pin) 141
3.21.6 DSPI timing 142

4 Package characteristics 148
4.1 ECOPACK® 148
4.2 Package mechanical data 148

5 Ordering information 153

6 Revision history 154

- High-performance e200z4d dual core
  - 32-bit Power Architecture® technology CPU
  - Core frequency as high as 120 MHz
  - Dual issue five-stage pipeline core
  - Variable Length Encoding (VLE)
  - Memory Management Unit (MMU)
  - 4 KB instruction cache with error detection code
  - Signal processing engine (SPE)
- Memory available
  - 1 MB flash memory with ECC
  - 128 KB on-chip SRAM with ECC
  - Built-in RWW capabilities for EEPROM emulation
- SIL3/ASILD innovative safety concept: LockStep mode and Fail-safe protection
  - Sphere of replication (SoR) for key components (such as CPU core, eDMA, crossbar switch)
  - Fault collection and control unit (FCCU)
  - Redundancy control and checker unit (RCCU) on outputs of the SoR connected to FCCU
  - Boot-time Built-In Self-Test for Memory (MBIST) and Logic (LBIST) triggered by hardware
  - Boot-time Built-In Self-Test for ADC and flash memory triggered by software
  - Replicated safety enhanced watchdog
  - Replicated junction temperature sensor
  - Non-maskable interrupt (NMI)
  - 16-region memory protection unit (MPU)
  - Clock monitoring units (CMU)
  - Power management unit (PMU)
  - Cyclic redundancy check (CRC) unit
- Decoupled Parallel mode for high-performance use of replicated cores
- Nexus Class 3+ interface
- Interrupts
  - Replicated 16-priority controller
  - Replicated 16-channel eDMA controller
- GPIOs individually programmable as input, output or special function
- Three 6-channel general-purpose eTimer units
- 2 FlexPWM units
  - Four 16-bit channels per module
- Communications interfaces
  - 2 LINFlexD channels
  - 3 DSPI channels with automatic chip select generation
  - 2 FlexCAN interfaces (2.0B Active) with 32 message objects

- Receive features
  - Individual programmable filters for each mailbox
  - 8 mailboxes configurable as a 6-entry receive FIFO
  - 8 programmable acceptance filters for receive FIFO
- Programmable clock source
  - System clock
  - Direct oscillator clock to avoid FMPLL jitter

1.5.27 FlexRay

The FlexRay module provides the following features:

- Full implementation of FlexRay Protocol Specification 2.1 Rev. A
- 64 configurable message buffers can be handled
- Dual channel or single channel mode of operation, each as fast as 10 Mbit/s data rate
- Message buffers configurable as transmit or receive
- Message buffer size configurable
- Message filtering for all message buffers based on Frame ID, cycle count, and message ID
- Programmable acceptance filters for receive FIFO
- Message buffer header, status, and payload data stored in system memory (SRAM)
- Internal FlexRay memories have error detection and correction

2 Package pinouts and signal descriptions

2.1 Package pinouts

Figure 2 shows the LQFP100 pinout.

Figure 2. LQFP100 pinout

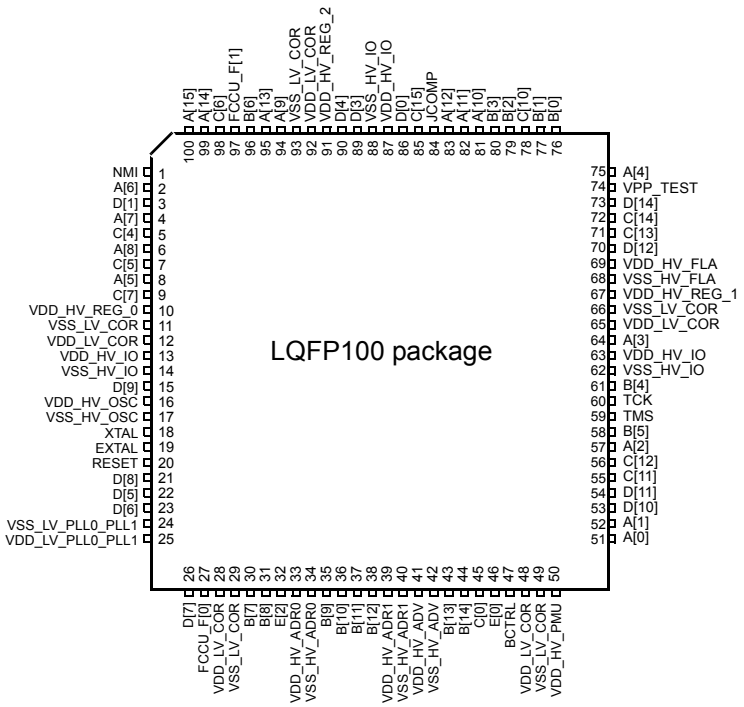

Figure 3 shows the SPC56ELx/SPC564Lx in the LQFP144 package.

Table 3. LQFP100 pin function summary (continued)

Pin #	Port/function	Peripheral	Output function	Input function
12	$V_{DD_LV_COR}$	—		
13	$V_{DD_HV_IO}$	—		
14	$V_{SS_HV_IO}$	—		
15	D[9]	SIUL	GPIO[57]	GPIO[57]
		FlexPWM_0	X[0]	X[0]
		LINFlexD_1	TXD	—
16	$V_{DD_HV_OSC}$	—		
17	$V_{SS_HV_OSC}$	—		
18	XTAL	—		
19	EXTAL	—		
20	RESET	—		
21	D[8]	SIUL	GPIO[56]	GPIO[56]
		DSPI_1	CS2	—
		eTimer_1	ETC[4]	ETC[4]
		DSPI_0	CS5	—
		FlexPWM_0	—	FAULT[3]
22	D[5]	SIUL	GPIO[53]	GPIO[53]
		DSPI_0	CS3	—
		FlexPWM_0	—	FAULT[2]
23	D[6]	SIUL	GPIO[54]	GPIO[54]
		DSPI_0	CS2	—
		FlexPWM_0	X[3]	X[3]
		FlexPWM_0	—	FAULT[1]
24	$V_{SS_LV_PLL0_PLL1}$	—		
25	$V_{DD_LV_PLL0_PLL1}$	—		
26	D[7]	SIUL	GPIO[55]	GPIO[55]
		DSPI_1	CS3	—
		DSPI_0	CS4	—
		SWG	Analog output	—
27	FCCU_F[0]	FCCU	F[0]	F[0]
28	$V_{DD_LV_COR}$	—		
29	$V_{SS_LV_COR}$	—		
30	B[7]	SIUL	—	GPIO[23]
		LINFlexD_0	—	RXD
		ADC_0	—	AN[0]

Table 3. LQFP100 pin function summary (continued)

Pin #	Port/function	Peripheral	Output function	Input function
76	B[0]	SIUL	GPIO[16]	GPIO[16]
		FlexCAN_0	TXD	—
		eTimer_1	ETC[2]	ETC[2]
		SSCM	DEBUG[0]	—
		SIUL	—	EIRQ[15]
77	B[1]	SIUL	GPIO[17]	GPIO[17]
		eTimer_1	ETC[3]	ETC[3]
		SSCM	DEBUG[1]	—
		FlexCAN_0	—	RXD
		FlexCAN_1	—	RXD
		SIUL	—	EIRQ[16]
78	C[10]	SIUL	GPIO[42]	GPIO[42]
		DSPI_2	CS2	—
		FlexPWM_0	A[3]	A[3]
		FlexPWM_0	—	FAULT[1]
79	B[2]	SIUL	GPIO[18]	GPIO[18]
		LINFlexD_0	TXD	—
		SSCM	DEBUG[2]	DEBUG[2]
		SIUL	—	EIRQ[17]
80	B[3]	SIUL	GPIO[19]	GPIO[19]
		SSCM	DEBUG[3]	DEBUG[3]
		LINFlexD_0	—	RXD
81	A[10]	SIUL	GPIO[10]	GPIO[10]
		DSPI_2	CS0	CS0
		FlexPWM_0	B[0]	B[0]
		FlexPWM_0	X[2]	X[2]
		SIUL	—	EIRQ[9]
82	A[11]	SIUL	GPIO[11]	GPIO[11]
		DSPI_2	SCK	SCK
		FlexPWM_0	A[0]	A[0]
		FlexPWM_0	A[2]	A[2]
		SIUL	—	EIRQ[10]

Table 4. LQFP144 pin function summary (continued)

Pin #	Port/function	Peripheral	Output function	Input function
68	E[0]	SIUL	—	GPIO[64]
		ADC_1	—	AN[5]
69	BCTRL	—		
70	$V_{DD_LV_COR}$	—		
71	$V_{SS_LV_COR}$	—		
72	$V_{DD_HV_PMU}$	—		
73	A[0]	SIUL	GPIO[0]	GPIO[0]
		eTimer_0	ETC[0]	ETC[0]
		DSPI_2	SCK	SCK
		SIUL	—	EIRQ[0]
74	A[1]	SIUL	GPIO[1]	GPIO[1]
		eTimer_0	ETC[1]	ETC[1]
		DSPI_2	SOUT	—
		SIUL	—	EIRQ[1]
75	G[11]	SIUL	GPIO[107]	GPIO[107]
		FlexRay	DBG3	—
		FlexPWM_0	—	FAULT[3]
76	D[10]	SIUL	GPIO[58]	GPIO[58]
		FlexPWM_0	A[0]	A[0]
		eTimer_0	—	ETC[0]
77	G[10]	SIUL	GPIO[106]	GPIO[106]
		FlexRay	DBG2	—
		DSPI_2	CS3	—
		FlexPWM_0	—	FAULT[2]
78	D[11]	SIUL	GPIO[59]	GPIO[59]
		FlexPWM_0	B[0]	B[0]
		eTimer_0	—	ETC[1]
79	G[9]	SIUL	GPIO[105]	GPIO[105]
		FlexRay	DBG1	—
		DSPI_1	CS1	—
		FlexPWM_0	—	FAULT[1]
		SIUL	—	EIRQ[29]
80	C[11]	SIUL	GPIO[43]	GPIO[43]
		eTimer_0	ETC[4]	ETC[4]
		DSPI_2	CS2	—

Table 4. LQFP144 pin function summary (continued)

Pin #	Port/function	Peripheral	Output function	Input function
108	A[4]	SIUL	GPIO[4]	GPIO[4]
		eTimer_1	ETC[0]	ETC[0]
		DSPI_2	CS1	—
		eTimer_0	ETC[4]	ETC[4]
		MC_RGM	—	FAB
		SIUL	—	EIRQ[4]
109	B[0]	SIUL	GPIO[16]	GPIO[16]
		FlexCAN_0	TXD	—
		eTimer_1	ETC[2]	ETC[2]
		SSCM	DEBUG[0]	—
		SIUL	—	EIRQ[15]
110	B[1]	SIUL	GPIO[17]	GPIO[17]
		eTimer_1	ETC[3]	ETC[3]
		SSCM	DEBUG[1]	—
		FlexCAN_0	—	RXD
		FlexCAN_1	—	RXD
		SIUL	—	EIRQ[16]
111	C[10]	SIUL	GPIO[42]	GPIO[42]
		DSPI_2	CS2	—
		FlexPWM_0	A[3]	A[3]
		FlexPWM_0	—	FAULT[1]
112	F[13]	SIUL	GPIO[93]	GPIO[93]
		eTimer_1	ETC[4]	ETC[4]
		SIUL	—	EIRQ[31]
113	F[15]	SIUL	GPIO[95]	GPIO[95]
		LINFlexD_1	—	RXD
114	B[2]	SIUL	GPIO[18]	GPIO[18]
		LINFlexD_0	TXD	—
		SSCM	DEBUG[2]	—
		SIUL	—	EIRQ[17]
115	F[14]	SIUL	GPIO[94]	GPIO[94]
		LINFlexD_1	TXD	—
116	B[3]	SIUL	GPIO[19]	GPIO[19]
		SSCM	DEBUG[3]	—
		LINFlexD_0	—	RXD

Table 5. LFBGA257 pin function summary (continued)

Pin #	Port/function	Peripheral	Output function	Input function
A15	C[10]	SIUL	GPIO[42]	GPIO[42]
		DSPI_2	CS2	—
		FlexPWM_0	A[3]	A[3]
		FlexPWM_0	—	FAULT[1]
A16	$V_{SS_HV_IO_RING}$	—		
A17	$V_{SS_HV_IO_RING}$	—		
B1	$V_{SS_HV_IO_RING}$	—		
B2	$V_{SS_HV_IO_RING}$	—		
B3	B[6]	SIUL	GPIO[22]	GPIO[22]
		MC_CGM	clk_out	—
		DSPI_2	CS2	—
		SIUL	—	EIRQ[18]
B4	A[14]	SIUL	GPIO[14]	GPIO[14]
		FlexCAN_1	TXD	—
		eTimer_1	ETC[4]	ETC[4]
		SIUL	—	EIRQ[13]
B5	F[3]	SIUL	GPIO[83]	GPIO[83]
		DSPI_0	CS6	—
B6	A[9]	SIUL	GPIO[9]	GPIO[9]
		DSPI_2	CS1	—
		FlexPWM_0	B[3]	B[3]
		FlexPWM_0	—	FAULT[0]
B7	D[4]	SIUL	GPIO[52]	GPIO[52]
		FlexRay	CB_TR_EN	—
		eTimer_1	ETC[5]	ETC[5]
		FlexPWM_0	B[3]	B[3]
B8	D[0]	SIUL	GPIO[48]	GPIO[48]
		FlexRay	CA_TX	—
		eTimer_1	ETC[1]	ETC[1]
		FlexPWM_0	B[1]	B[1]
B9	$V_{SS_HV_IO_RING}$	—		
B10	H[12]	SIUL	GPIO[124]	GPIO[124]
		FlexPWM_1	B[2]	B[2]

Table 5. LFBGA257 pin function summary (continued)

Pin #	Port/function	Peripheral	Output function	Input function
D3	A[15]	SIUL	GPIO[15]	GPIO[15]
		eTimer_1	ETC[5]	ETC[5]
		FlexCAN_1	—	RXD
		FlexCAN_0	—	RXD
		SIUL	—	EIRQ[14]
D4	C[6]	SIUL	GPIO[38]	GPIO[38]
		DSPI_0	SOUT	—
		FlexPWM_0	B[1]	B[1]
		SSCM	DEBUG[6]	—
		SIUL	—	EIRQ[24]
D5	$V_{SS_LV_CORE_RING}$	—		
D6	$V_{DD_LV_CORE_RING}$	—		
D7	F[0]	SIUL	GPIO[80]	GPIO[80]
		FlexPWM_0	A[1]	A[1]
		eTimer_0	—	ETC[2]
		SIUL	—	EIRQ[28]
D8	$V_{DD_HV_IO_RING}$	—		
D9	$V_{SS_HV_IO_RING}$	—		
D10	Not connected	—		
D11	A[11]	SIUL	GPIO[11]	GPIO[11]
		DSPI_2	SCK	SCK
		FlexPWM_0	A[0]	A[0]
		FlexPWM_0	A[2]	A[2]
		SIUL	—	EIRQ[10]
D12	E[13]	SIUL	GPIO[77]	GPIO[77]
		eTimer_0	ETC[5]	ETC[5]
		DSPI_2	CS3	—
		SIUL	—	EIRQ[25]
D13	F[15]	SIUL	GPIO[95]	GPIO[95]
		LINFlexD_1	—	RXD
D14	$V_{DD_HV_IO_RING}$	—		
D15	V_{PP_TEST}(1)	—		
D16	D[14]	SIUL	GPIO[62]	GPIO[62]
		FlexPWM_0	B[1]	B[1]
		eTimer_0	—	ETC[3]

Table 5. LFBGA257 pin function summary (continued)

Pin #	Port/function	Peripheral	Output function	Input function
H17	H[6]	SIUL	GPIO[118]	GPIO[118]
		FlexPWM_1	B[0]	B[0]
		DSPI_0	CS5	—
J1	F[7]	SIUL	GPIO[87]	GPIO[87]
		NPC	MCKO	—
J2	G[15]	SIUL	GPIO[111]	GPIO[111]
		NPC	MDO[8]	—
J3	$V_{DD_HV_REG_0}$	—		
J4	$V_{DD_HV_REG_0}$	—		
J6	V_{DD_LV}	—		
J7	V_{SS_LV}	—		
J8	V_{SS_LV}	—		
J9	V_{SS_LV}	—		
J10	V_{SS_LV}	—		
J11	V_{SS_LV}	—		
J12	V_{DD_LV}	—		
J14	V_{DD_LV}	—		
J15	$V_{DD_HV_REG_1}$	—		
J16	$V_{SS_HV_FLA}$	—		
J17	H[15]	SIUL	GPIO[127]	GPIO[127]
		FlexPWM_1	B[3]	B[3]
		eTimer_2	ETC[5]	ETC[5]
K1	F[9]	SIUL	GPIO[89]	GPIO[89]
		NPC	MSEO[0]	—
K2	F[8]	SIUL	GPIO[88]	GPIO[88]
		NPC	MSEO[1]	—
K3	RDY	NPC	RDY	—
		SIUL	GPIO[132]	GPIO[132]
K4	C[7]	SIUL	GPIO[39]	GPIO[39]
		FlexPWM_0	A[1]	A[1]
		SSCM	DEBUG[7]	—
		DSPI_0	—	SIN
K6	V_{DD_LV}	—		
K7	V_{SS_LV}	—		
K8	V_{SS_LV}	—		

Table 5. LFBGA257 pin function summary (continued)

Pin #	Port/function	Peripheral	Output function	Input function
P15	G[10]	SIUL	GPIO[106]	GPIO[106]
		FlexRay	DBG2	—
		DSPI_2	CS3	—
		FlexPWM_0	—	FAULT[2]
P16	G[8]	SIUL	GPIO[104]	GPIO[104]
		FlexRay	DBG0	—
		DSPI_0	CS1	—
		FlexPWM_0	—	FAULT[0]
		SIUL	—	EIRQ[21]
P17	G[7]	SIUL	GPIO[103]	GPIO[103]
		FlexPWM_0	B[3]	B[3]
R1	EXTAL	—		
R2	FCCU_F[0]	FCCU	F[0]	F[0]
R3	$V_{SS_HV_IO_RING}$	—		
R4	D[7]	SIUL	GPIO[55]	GPIO[55]
		DSPI_1	CS3	—
		DSPI_0	CS4	—
		SWG	analog output	—
R5	B[7]	SIUL	—	GPIO[23]
		LINFlexD_0	—	RXD
		ADC_0	—	AN[0]
R6	E[6]	SIUL	—	GPIO[70]
		ADC_0	—	AN[4]
R7	$V_{DD_HV_ADR0}$	—		
R8	B[10]	SIUL	—	GPIO[26]
		ADC_0 ADC_1	—	AN[12]
R9	$V_{DD_HV_ADR1}$	—		
R10	B[13]	SIUL	—	GPIO[29]
		LINFlexD_1	—	RXD
		ADC_1	—	AN[0]
R11	B[15]	SIUL	—	GPIO[31]
		SIUL	—	EIRQ[20]
		ADC_1	—	AN[2]

Table 8. Pin muxing (continued)

Port name	PCR	Peripheral	Alternate output function	Output mux sel	Input functions	Input mux select	Weak pull config during reset	Pad speed(1)		Pin #		
								SRC = 1	SRC = 0	100 pkg	144 pkg	257 pkg
A[11]	PCR[11]	SIUL	GPIO[11]	ALT0	GPIO[11]	—	—	M	S	82	120	D11
		DSPI_2	SCK	ALT1	SCK	PSMI[1]; PADSEL=1						
		FlexPWM_0	A[0]	ALT2	A[0]	PSMI[20]; PADSEL=0						
		FlexPWM_0	A[2]	ALT3	A[2]	PSMI[22]; PADSEL=0						
		SIUL	—	—	EIRQ[10]	—						
A[12]	PCR[12]	SIUL	GPIO[12]	ALT0	GPIO[12]	—	—	M	S	83	122	A10
		DSPI_2	SOUT	ALT1	—	—						
		FlexPWM_0	A[2]	ALT2	A[2]	PSMI[22]; PADSEL=1						
		FlexPWM_0	B[2]	ALT3	B[2]	PSMI[26]; PADSEL=0						
		SIUL	—	—	EIRQ[11]	—						
A[13]	PCR[13]	SIUL	GPIO[13]	ALT0	GPIO[13]	—	—	M	S	95	136	C6
		FlexPWM_0	B[2]	ALT2	B[2]	PSMI[26]; PADSEL=1						
		DSPI_2	—	—	SIN	PSMI[2]; PADSEL=1						
		FlexPWM_0	—	—	FAULT[0]	PSMI[16]; PADSEL=1						
		SIUL	—	—	EIRQ[12]	—						

Table 8. Pin muxing (continued)

Port name	PCR	Peripheral	Alternate output function	Output mux sel	Input functions	Input mux select	Weak pull config during reset	Pad speed(1)		Pin #		
								SRC = 1	SRC = 0	100 pkg	144 pkg	257 pkg
I[1]	PCR[129]	SIUL	GPIO[129]	ALT0	GPIO[129]	—	—	M	S	—	—	C12
		eTimer_2	ETC[1]	ALT1	ETC[1]	PSMI[40]; PADSEL=1						
		DSPI_0	CS5	ALT2	—	—						
		FlexPWM_1	—	—	FAULT[1]	—						
I[2]	PCR[130]	SIUL	GPIO[130]	ALT0	GPIO[130]	—	—	M	S	—	—	F16
		eTimer_2	ETC[2]	ALT1	ETC[2]	PSMI[41]; PADSEL=1						
		DSPI_0	CS6	ALT2	—	—						
		FlexPWM_1	—	—	FAULT[2]	—						
I[3]	PCR[131]	SIUL	GPIO[131]	ALT0	GPIO[131]	—	—	M	S	—	—	E17
		eTimer_2	ETC[3]	ALT1	ETC[3]	PSMI[42]; PADSEL=1						
		DSPI_0	CS7	ALT2	—	—						
		CTU_0	EXT_TGR	ALT3	—	—						
		FlexPWM_1	—	—	FAULT[3]	—						
$\overline{\text{RDY}}$	PCR[132]	SIUL	GPIO[132]	ALT0	GPIO[132]	—	—	F	S	—	—	K3
		NPC	RDY	ALT2	—	—						

1. Programmable via the SRC (Slew Rate Control) bit in the respective Pad Configuration Register; S = Slow, M = Medium, F = Fast, SYM = Symmetric (for FlexRay)
2. The default function of this pin out of reset is ALT1 (TDO).
3. Analog

Note: Open Drain can be configured by the PCRn for all pins used as output (except FCCU_F[0] and FCCU_F[1]).

Figure 6. BCP68 board schematic example

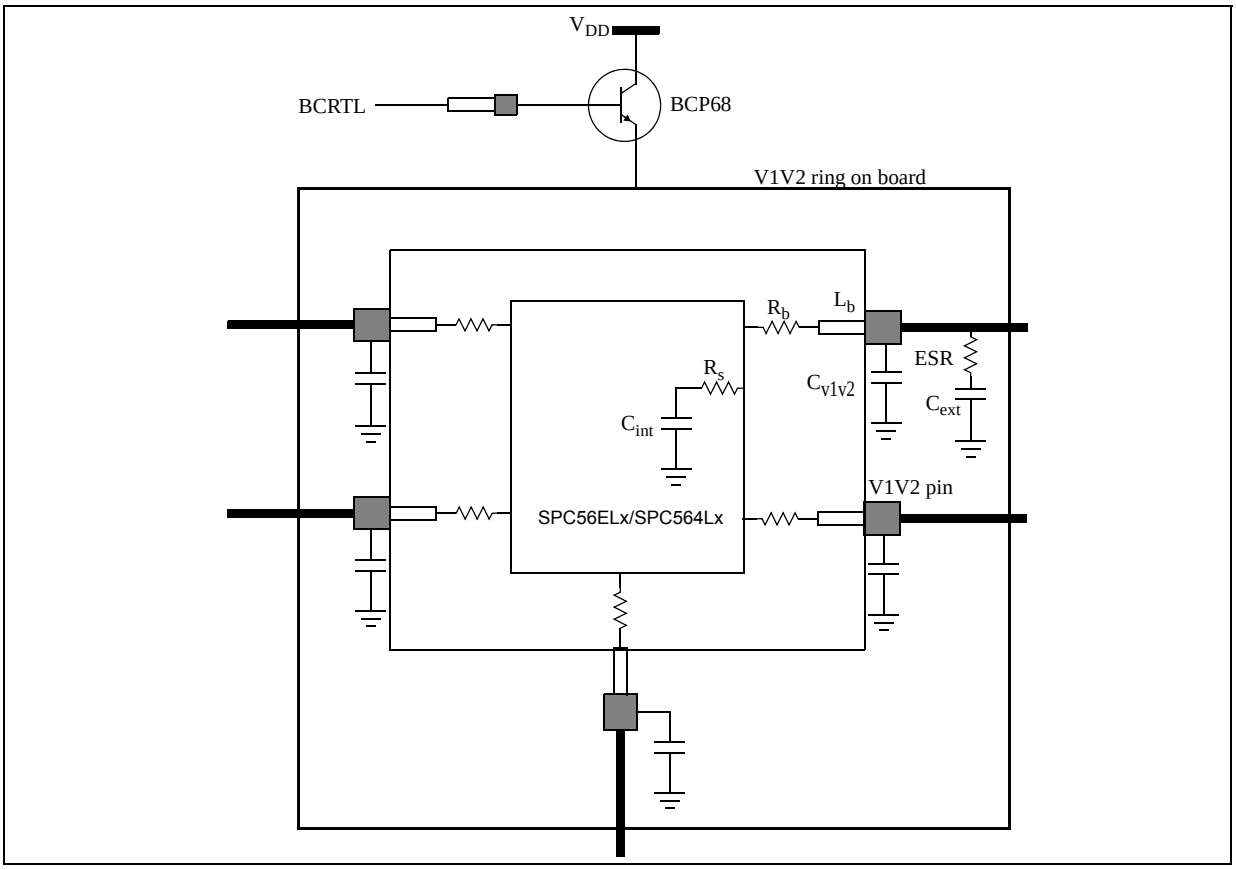

Note: The minimum value of the ESR is constrained by the resonance caused by the external components, bonding inductance, and internal decoupling. The minimum ESR is required to avoid the resonance and make the regulator stable.

3.10 DC electrical characteristics

Table 21 gives the DC electrical characteristics at 3.3 V (3.0 V < $V_{DD_HV_IOx}$ < 3.6 V).

Table 21. DC electrical characteristics(1)

Symbol		Parameter	Conditions	Min	Typ	Max	Unit
V_{IL}	D	Minimum low level input voltage	—	–0.1(2)	—	—	V
V_{IL}	P	Maximum low level input voltage	—	—	—	0.35 $V_{DD_HV_IOx}$	V
V_{IH}	P	Minimum high level input voltage	—	0.65 $V_{DD_HV_IOx}$	—	—	V
V_{IH}	D	Maximum high level input voltage	—	—	—	$V_{DD_HV_IOx}$ + 0.1(2), (3)	V
V_{HYS}	T	Schmitt trigger hysteresis	—	0.1 $V_{DD_HV_IOx}$	—	—	V

3.13 Main oscillator electrical characteristics

The device provides an oscillator/resonator driver. *Figure 7* describes a simple model of the internal oscillator driver and provides an example of a connection for an oscillator or a resonator.

Figure 7. Crystal oscillator and resonator connection scheme

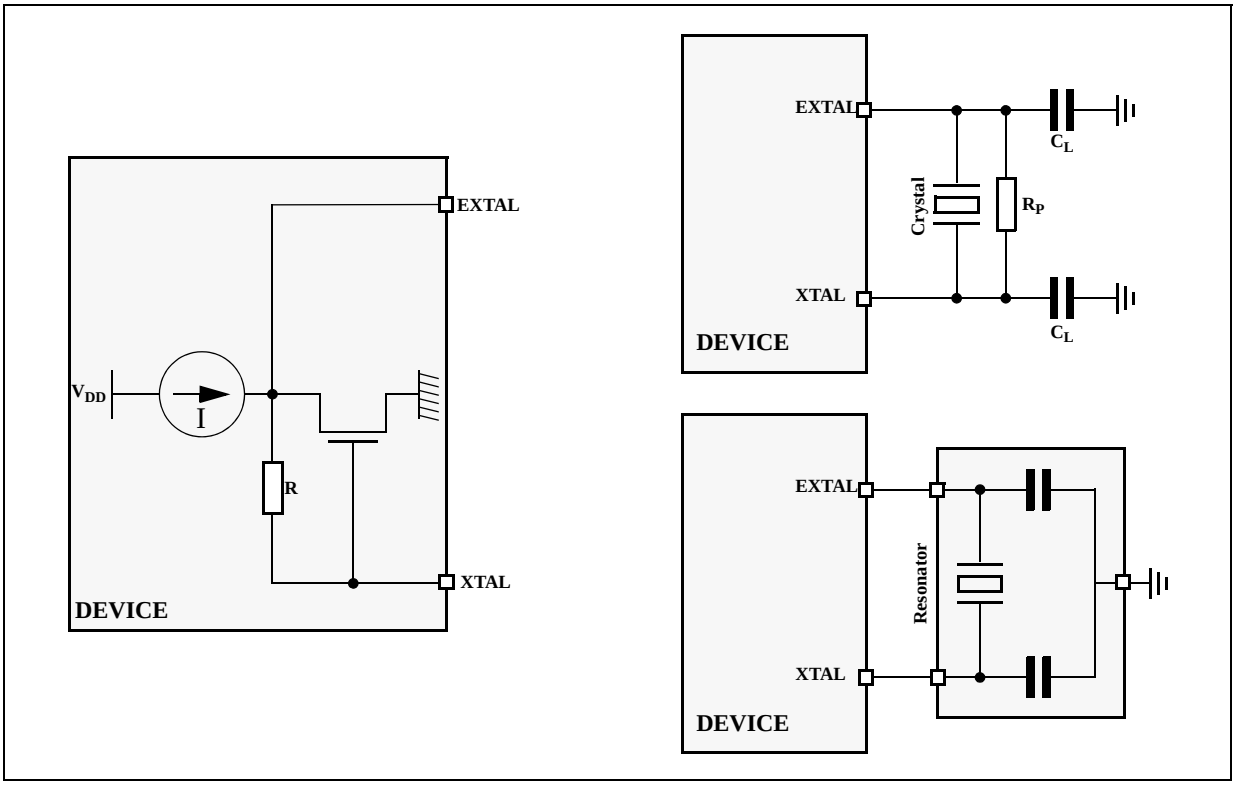

Note: XTAL/EXTAL must not be directly used to drive external circuits.

Equation 4:

$$V_A \bullet \frac{R_S + R_F}{R_{EQ}} < \frac{1}{2} LSB$$

Equation 4 generates a constraint for external network design, in particular on resistive path. Internal switch resistances (R_{SW} and R_{AD}) can be neglected with respect to external resistances.

Figure 10. Input Equivalent Circuit

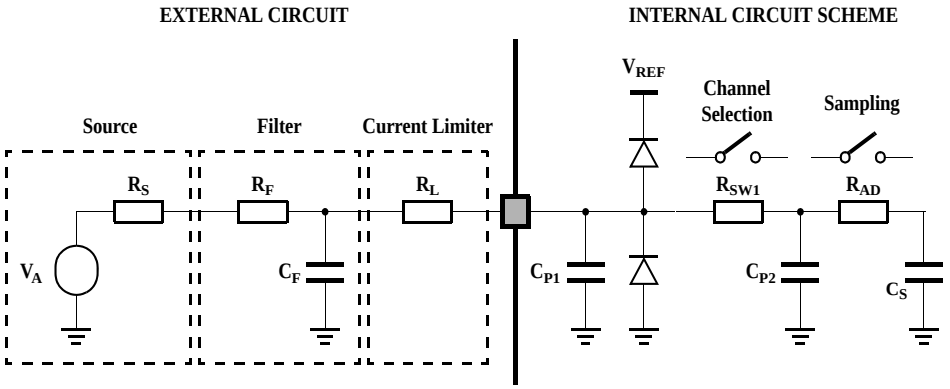

Legend:

R_S Source Impedance

R_F Filter Resistance

C_F Filter Capacitance

R_L Current Limiter Resistance

R_{SW1} Channel Selection Switch Impedance

R_{AD} Sampling Switch Impedance

C_P Pin Capacitance (two contributions, C_{P1} and C_{P2})

C_S Sampling Capacitance

A second aspect involving the capacitance network shall be considered. Assuming the three capacitances C_F, C_{P1} and C_{P2} are initially charged at the source voltage V_A (refer to the equivalent circuit reported in *Figure 10*): A charge sharing phenomenon is installed when the sampling phase is started (A/D switch close).

Figure 19. Reset sequence start for Destructive Resets

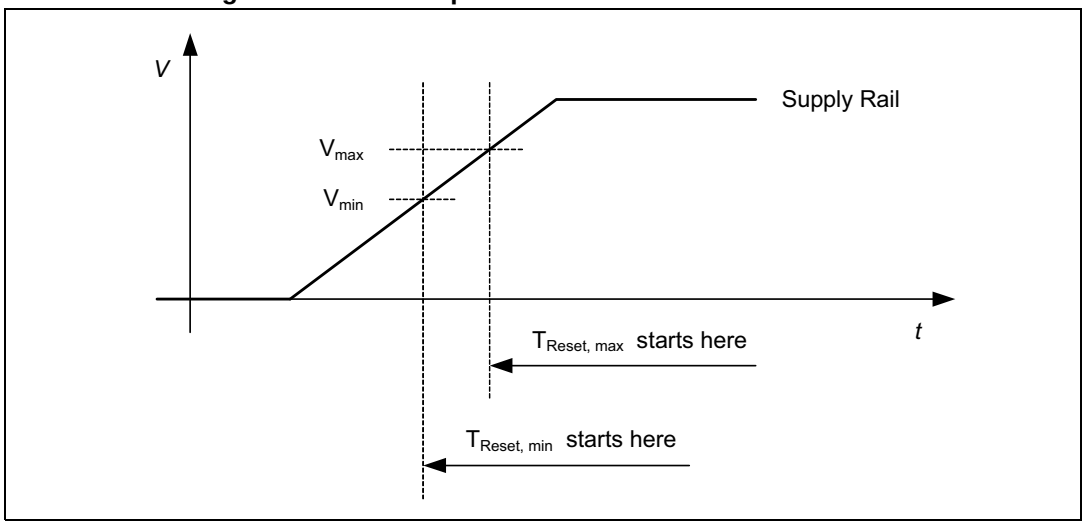

Table 35. Voltage Thresholds

Variable name	Value
V_{min}	Refer to *Table 20*
V_{max}	Refer to *Table 20*
Supply Rail	VDD_HV_PMU

3.20.4.2 External reset via $\overline{\text{RESET}}$

Figure 20 shows the voltage thresholds that determine the start of the reset sequences initiated by the assertion of $\overline{\text{RESET}}$ as specified in *Table 34*.

Figure 20. Reset sequence start via $\overline{\text{RESET}}$ assertion

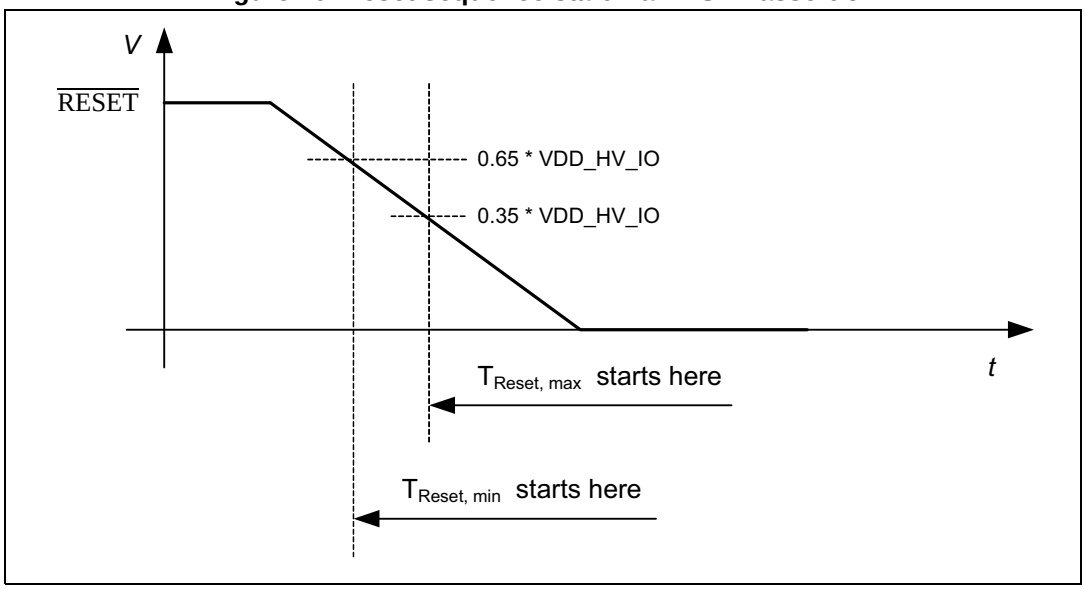

2. C_L includes device and package capacitance (C_{PKG} < 5 pF).

3.21.2 WKUP/NMI timing

Table 37. WKUP/NMI glitch filter

No.	Symbol		Parameter	Min	Typ	Max	Unit
1	W_{FNMI}	D	NMI pulse width that is rejected	—	—	45	ns
2	W_{NFNMI}	D	NMI pulse width that is passed	205	—	—	ns

3.21.3 IEEE 1149.1 JTAG interface timing

Table 38. JTAG pin AC electrical characteristics

No.	Symbol		Parameter	Conditions	Min	Max	Unit
1	t_{JCYC}	D	TCK cycle time	—	62.5	—	ns
2	t_{JDC}	D	TCK clock pulse width (measured at $V_{DDE}/2$)	—	40	60	%
3	$t_{TCKRISE}$	D	TCK rise and fall times (40%–70%)	—	—	3	ns
4	t_{TMSS}, t_{TDIS}	D	TMS, TDI data setup time	—	5	—	ns
5	t_{TMSH}, t_{TDIH}	D	TMS, TDI data hold time	—	25	—	ns
6	t_{TDOV}	D	TCK low to TDO data valid	—	—	20	ns
7	t_{TDOI}	D	TCK low to TDO data invalid	—	0	—	ns
8	t_{TDOHZ}	D	TCK low to TDO high impedance	—	—	20	ns
11	t_{BSDV}	D	TCK falling edge to output valid	—	—	50	ns
12	t_{BSDVZ}	D	TCK falling edge to output valid out of high impedance	—	—	50	ns
13	t_{BSDHZ}	D	TCK falling edge to output high impedance	—	—	50	ns
14	t_{BSDST}	D	Boundary scan input valid to TCK rising edge	—	50	—	ns
15	t_{BSDHT}	D	TCK rising edge to boundary scan input invalid	—	50	—	ns