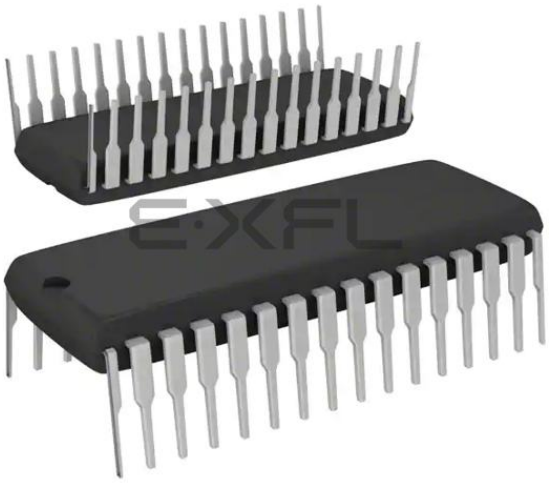

Welcome to E-XFL.COM

What is "Embedded - Microcontrollers"?

"Embedded - Microcontrollers" refer to small, integrated circuits designed to perform specific tasks within larger systems. These microcontrollers are essentially compact computers on a single chip, containing a processor core, memory, and programmable input/output peripherals. They are called "embedded" because they are embedded within electronic devices to control various functions, rather than serving as standalone computers. Microcontrollers are crucial in modern electronics, providing the intelligence and control needed for a wide range of applications.

Applications of "Embedded - Microcontrollers"

Details	
Product Status	Obsolete
Core Processor	STM8
Core Size	8-Bit
Speed	16MHz
Connectivity	I²C, IrDA, LINbus, SPI, UART/USART
Peripherals	Brown-out Detect/Reset, POR, PWM, WDT
Number of I/O	28
Program Memory Size	8KB (8K x 8)
Program Memory Type	FLASH
EEPROM Size	640 x 8
RAM Size	1K x 8
Voltage - Supply (Vcc/Vdd)	2.95V ~ 5.5V
Data Converters	A/D 7x10b
Oscillator Type	Internal
Operating Temperature	-40°C ~ 85°C (TA)
Mounting Type	Through Hole
Package / Case	32-SDIP (0.400", 10.16mm)
Supplier Device Package	-
Purchase URL	https://www.e-xfl.com/product-detail/stmicroelectronics/stm8s903k3b6

3 Block diagram

Figure 1. STM8S903K3/F3 block diagram

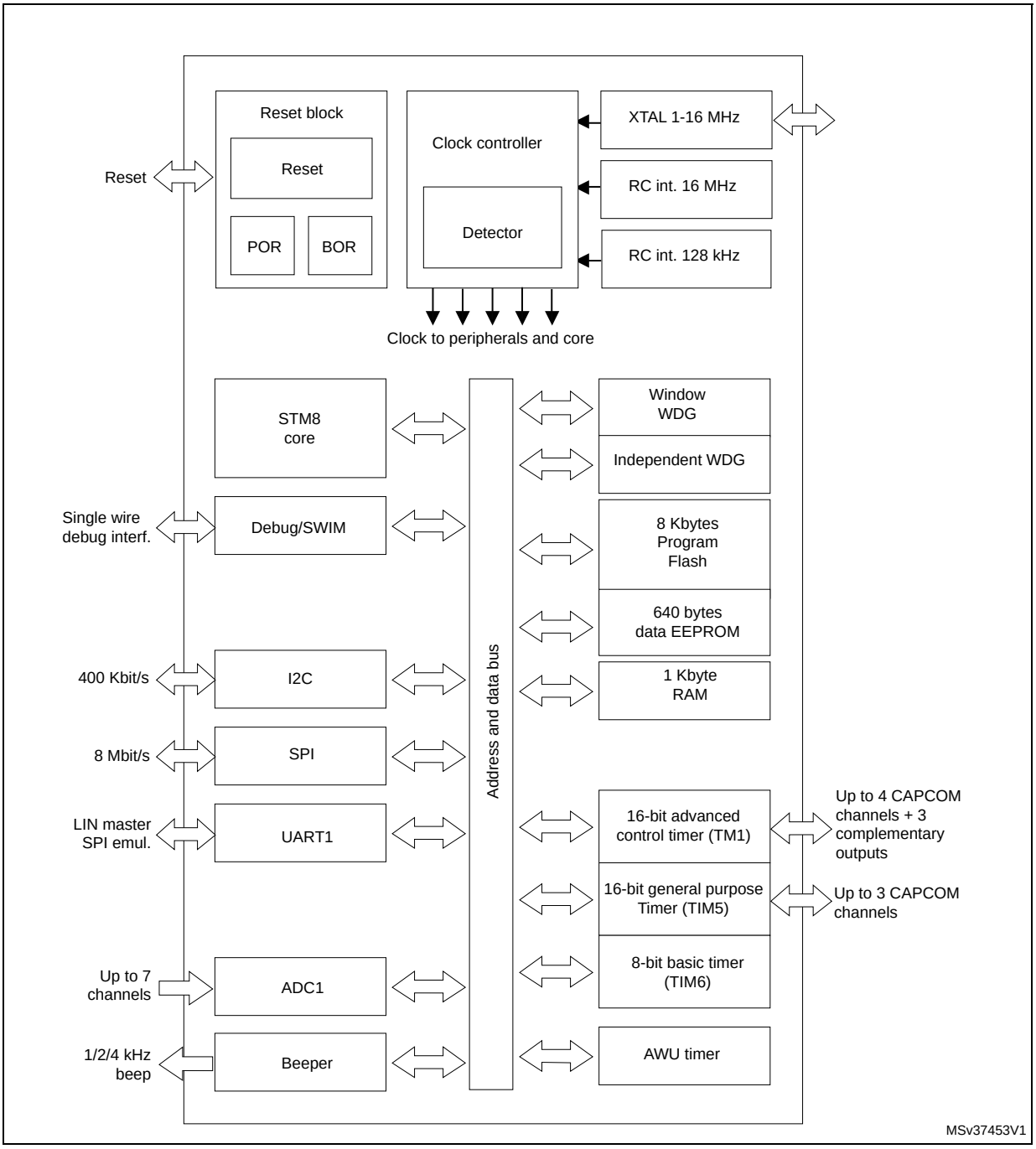

4.6 Power management

For efficient power management, the application can be put in one of four different low-power modes. You can configure each mode to obtain the best compromise between lowest power consumption, fastest start-up time and available wakeup sources.

- **Wait mode:** In this mode, the CPU is stopped, but peripherals are kept running. The wakeup is performed by an internal or external interrupt or reset.
- **Active halt mode with regulator on:** In this mode, the CPU and peripheral clocks are stopped. An internal wakeup is generated at programmable intervals by the auto wake up unit (AWU). The main voltage regulator is kept powered on, so current consumption is higher than in active halt mode with regulator off, but the wakeup time is faster. Wakeup is triggered by the internal AWU interrupt, external interrupt or reset.
- **Active halt mode with regulator off:** This mode is the same as active halt with regulator on, except that the main voltage regulator is powered off, so the wake up time is slower.
- **Halt mode:** In this mode the microcontroller uses the least power. The CPU and peripheral clocks are stopped, the main voltage regulator is powered off. Wakeup is triggered by external event or reset.

4.7 Watchdog timers

The watchdog system is based on two independent timers providing maximum security to the applications.

Activation of the watchdog timers is controlled by option bytes or by software. Once activated, the watchdogs cannot be disabled by the user program without performing a reset.

Window watchdog timer

The window watchdog is used to detect the occurrence of a software fault, usually generated by external interferences or by unexpected logical conditions, which cause the application program to abandon its normal sequence.

The window function can be used to trim the watchdog behavior to match the application perfectly.

The application software must refresh the counter before time-out and during a limited time window.

A reset is generated in two situations:

1. Timeout: At 16 MHz CPU clock the time-out period can be adjusted between 75 µs up to 64 ms.
2. Refresh out of window: The downcounter is refreshed before its value is lower than the one stored in the window register.

Independent watchdog timer

The independent watchdog peripheral can be used to resolve processor malfunctions due to hardware or software failures.

It is clocked by the 128 kHz LSI internal RC clock source, and thus stays active even in case of a CPU clock failure

The IWDG time base spans from 60 µs to 1 s.

4.8 Auto wakeup counter

- Used for auto wakeup from active halt mode,
- Clock source: Internal 128 kHz internal low frequency RC oscillator or external clock,
- LSI clock can be internally connected to TIM1 input capture channel 1 for calibration.

4.9 Beeper

The beeper function outputs a signal on the BEEP pin for sound generation. The signal is in the range of 1, 2 or 4 kHz.

The beeper output port is only available through the alternate function remap option bit AFR7.

4.10 TIM1 - 16-bit advanced control timer

This is a high-end timer designed for a wide range of control applications. With its complementary outputs, dead-time control and center-aligned PWM capability, the field of applications is extended to motor control, lighting and half-bridge driver

- 16-bit up, down and up/down autoreload counter with 16-bit prescaler
- Four independent capture/compare channels (CAPCOM) configurable as input capture, output compare, PWM generation (edge and center aligned mode) and single pulse mode output
- Synchronization module to control the timer with external signals or to synchronize with TIM5 or TIM6
- Break input to force the timer outputs into a defined state
- Three complementary outputs with adjustable dead time
- Encoder mode
- Interrupt sources: 3 x input capture/output compare, 1 x overflow/update, 1 x break
-

4.11 TIM5 - 16-bit general purpose timer

- 16-bit autoreload (AR) up-counter
- 15-bit prescaler adjustable to fixed power of 2 ratios 1…32768
- 3 individually configurable capture/compare channels
- PWM mode
- Interrupt sources: 3 x input capture/output compare, 1 x overflow/update
- Synchronization module to control the timer with external signals or to synchronize with TIM1 or TIM6

4.12 TIM6 - 8-bit basic timer

- 8-bit autoreload, adjustable prescaler ratio to any power of 2 from 1 to 128
- Clock source: CPU clock
- Interrupt source: 1 x overflow/update
- Synchronization module to control the timer with external signals or to synchronize with TIM1 or TIM5.

Table 3. TIM timer features

Timer	Counter size (bits)	Prescaler	Counting mode	CAPCOM channels	Complementary outputs	Ext. trigger	Timer synchronization/ chaining
TIM1	16	Any integer from 1 to 65536	Up/down	4	3	Yes	Yes
TIM5	16	Any power of 2 from 1 to 32768	Up	3	0	No	
TIM6	8	Any power of 2 from 1 to 128	Up	0	0	No	

5.2 STM8S903F3 UFQFPN20 pinout

Figure 4. STM8S903F3 UFQFPN20 pinout

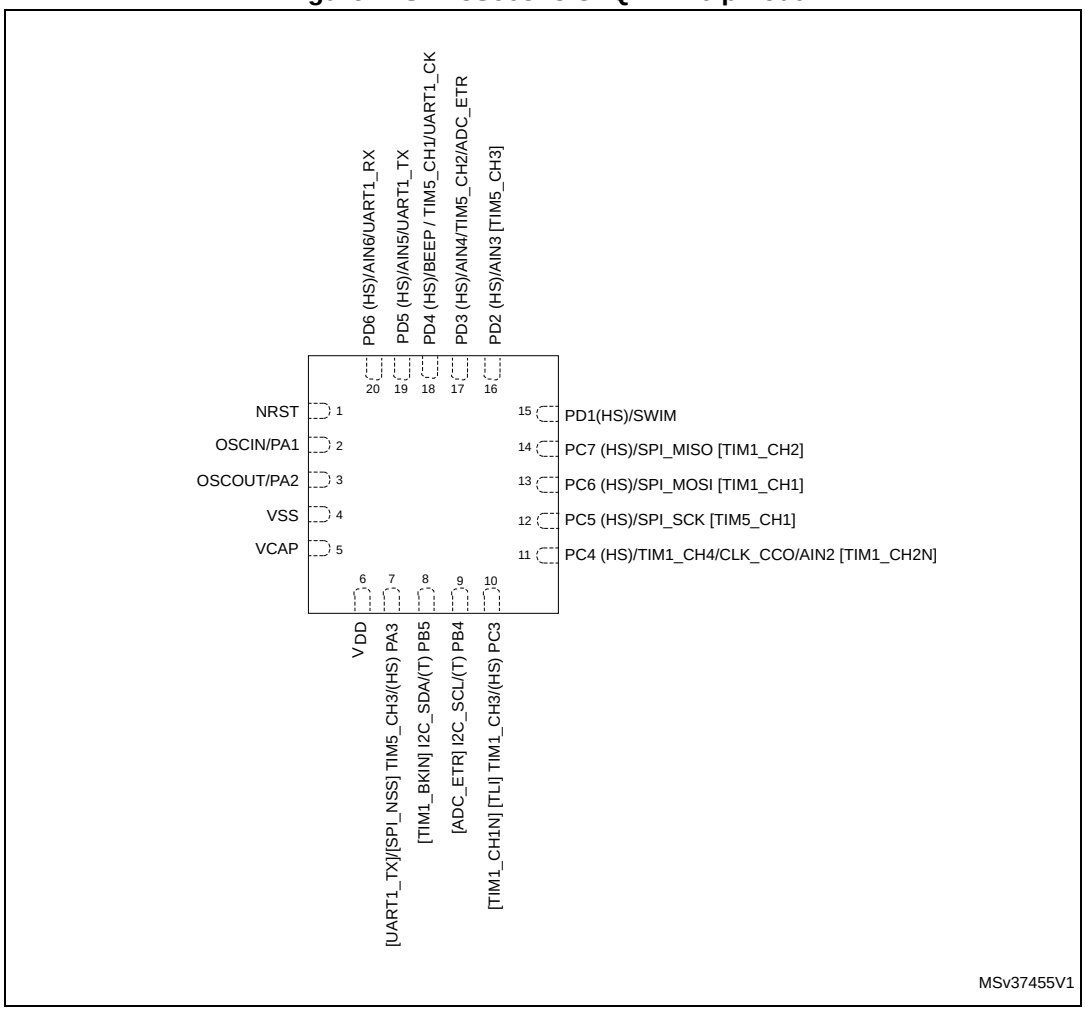

1. HS high sink capability.
2. (T) True open drain (P-buffer and protection diode to VDD not implemented).
3. [ ] alternate function remapping option (if the same alternate function is shown twice, it indicates an exclusive choice not a duplication of the function).

Table 8. General hardware register map (continued)

Address	Block	Register label	Register name	Reset status
0x00 5208 to 0x00 520F	Reserved area (8 byte)			
0x00 5210	I2C	I2C_CR1	I2C control register 1	0x00
0x00 5211		I2C_CR2	I2C control register 2	0x00
0x00 5212		I2C_FREQR	I2C frequency register	0x00
0x00 5213		I2C_OARL	I2C Own address register low	0x00
0x00 5214		I2C_OARH	I2C Own address register high	0x00
0x00 5215		Reserved		
0x00 5216		I2C_DR	I2C data register	0x00
0x00 5217		I2C_SR1	I2C status register 1	0x00
0x00 5218		I2C_SR2	I2C status register 2	0x00
0x00 5219		I2C_SR3	I2C status register 3	0x0X
0x00 521A		I2C_ITR	I2C interrupt control register	0x00
0x00 521B		I2C_CCRL	I2C Clock control register low	0x00
0x00 521C		I2C_CCRH	I2C Clock control register high	0x00
0x00 521D		I2C_TRISER	I2C TRISE register	0x02
0x00 521E		I2C_PECR	I2C packet error checking register	0x00
0x00 521F to 0x00 522F	Reserved area (17 byte)			
0x00 5230	UART1	UART1_SR	UART1 status register	0xC0
0x00 5231		UART1_DR	UART1 data register	0xXX
0x00 5232		UART1_BRR1	UART1 baud rate register 1	0x00
0x00 5233		UART1_BRR2	UART1 baud rate register 2	0x00
0x00 5234		UART1_CR1	UART1 control register 1	0x00
0x00 5235		UART1_CR2	UART1 control register 2	0x00
0x00 5236		UART1_CR3	UART1 control register 3	0x00
0x00 5237		UART1_CR4	UART1 control register 4	0x00
0x00 5238		UART1_CR5	UART1 control register 5	0x00
0x00 5239		UART1_GTR	UART1 guard time register	0x00
0x00 523A		UART1_PSCR	UART1 prescaler register	0x00
0x00 523B to 0x00 523F	Reserved area (21 byte)			

Table 12. Option byte description

Option byte no.	Description
OPT0	**ROP[7:0]** Memory readout protection (ROP) 0xAA: Enable readout protection (write access via SWIM protocol) *Note: Refer to the family reference manual (RM0016) section on Flash/EEPROM memory readout protection for details.*
OPT1	**UBC[7:0]** User boot code area 0x00: no UBC, no write-protection 0x01: Page 0 defined as UBC, memory write-protected Page 0 and 1 contain the interrupt vectors. ... 0x7F: Pages 0 to 126 defined as UBC, memory write-protected Other values: Pages 0 to 127 defined as UBC, memory write-protected *Note: Refer to the family reference manual (RM0016) section on Flash write protection for more details.*
OPT2	**AFR[7:0]** Refer to the following section for alternate function remapping descriptions of bits [7:2] and [1:0] respectively.
OPT3	**HSITRIM:** High speed internal clock trimming register size 0: 3-bit trimming supported in CLK_HSITRIMR register 1: 4-bit trimming supported in CLK_HSITRIMR register
	LSI_EN: Low speed internal clock enable 0: LSI clock is not available as CPU clock source 1: LSI clock is available as CPU clock source
	IWDG_HW: Independent watchdog 0: IWDG Independent watchdog activated by software 1: IWDG Independent watchdog activated by hardware
	WWDG_HW: Window watchdog activation 0: WWDG window watchdog activated by software 1: WWDG window watchdog activated by hardware
	WWDG_HALT: Window watchdog reset on halt 0: No reset generated on halt if WWDG active 1: Reset generated on halt if WWDG active

Total current consumption in halt mode

Table 29. Total current consumption in halt mode at V_{DD} = 5 V

Symbol	Parameter	Conditions	Typ	Max at 85 °C(1)	Max at 85 °C(1)	Unit
$I_{DD(H)}$	Supply current in halt mode	Flash in operating mode, HSI clock after wakeup	63	75	105	µA
		Flash in power-down mode, HSI clock after wakeup	6.0	20	55	

1. Guaranteed by characterization results.

Table 30. Total current consumption in halt mode at V_{DD} = 3.3 V

Symbol	Parameter	Conditions	Typ	Max at 85 °C(1)	Max at 85 °C(1)	Unit
$I_{DD(H)}$	Supply current in halt mode	Flash in operating mode, HSI clock after wakeup	60	75	100	µA
		Flash in power-down mode, HSI clock after wakeup	4.5	17	30	

1. Guaranteed by characterization results.

Low power mode wakeup times

Table 31. Wakeup times

Symbol	Parameter	Conditions			Typ	Max(1)	Unit
$t_{WU(WFI)}$	Wakeup time from wait mode to run mode(2)	0 to 16 MHz			-	See note(3)	µs
$t_{WU(WFI)}$	Wakeup time from run mode(2)	f_{CPU}= f_{MASTER}= 16 MHz			0.56	-	
$t_{WU(AH)}$	Wakeup time active halt mode to run mode(2)	MVR voltage regulator on(4)	Flash in operating mode(5)	HSI (after wakeup)	1(6)	2(6)	
$t_{WU(AH)}$	Wakeup time active halt mode to run mode(2)	MVR voltage regulator off(4)	Flash in operating mode(5)	HSI (after wakeup)	3(6)	-	
$t_{WU(AH)}$	Wakeup time active halt mode to run mode(2)	MVR voltage regulator off(4)	Flash in operating mode(5)	HSI (after wakeup)	48(6)	-	
$t_{WU(AH)}$	Wakeup time active halt mode to run mode(2)	MVR voltage regulator off(4)	Flash in power-down mode(5)	HSI (after wakeup)	50(6)	-	
$t_{WU(H)}$	Wakeup time from halt mode to run mode(2)	Flash in operating mode(5)			52	-	
$t_{WU(H)}$	Wakeup time from halt mode to run mode(2)	Flash in power-down mode(5)			54	-	

1. Guaranteed by characterization results.

10.3.3 External clock sources and timing characteristics

HSE user external clock

Subject to general operating conditions for V_{DD} and T_A.

Table 34. HSE user external clock characteristics

Symbol	Parameter	Conditions	Min	Max	Unit
f_{HSE_ext}	User external clock source frequency	-	0	16	MHz
V_{HSEH}(1)	OSCIN input pin high level voltage	-	0.7 x V_{DD}	V_{DD} + 0.3 V	V
V_{HSEL}(1)	OSCIN input pin low level voltage	-	V_{SS}	0.3 x V_{DD}	
I_{LEAK_HSE}	OSCIN input leakage current	$V_{SS} < V_{IN} < V_{DD}$	-1	+1	µA

1. Guaranteed by characterization results.

Figure 18. HSE external clock source

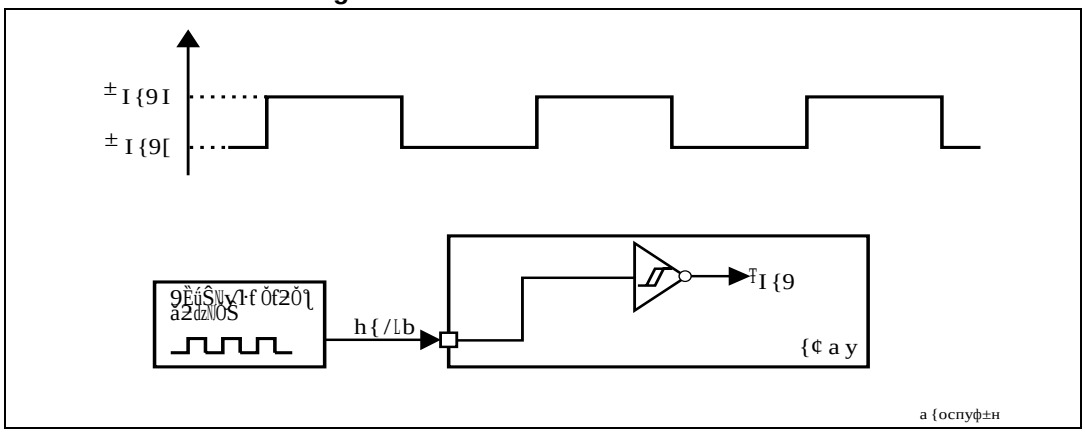

Figure 31. Typ. V_{DD} - V_{OH} @ V_{DD} = 3.3 V (standard ports)	Figure 32. Typ. V_{DD} - V_{OH} @ V_{DD} = 5.0 V (standard ports)

Figure 33. Typ. V_{DD} - V_{OH} @ V_{DD} = 3.3 V (high sink ports)	Figure 34. Typ. V_{DD} - V_{OH} @ V_{DD} = 5.0 V (high sink ports)

Figure 36. Typical NRST pull-up resistance R_{PU} vs V_{DD} @ 4 temperatures

Figure 37. Typical NRST pull-up current I_{pu} vs V_{DD} @ 4 temperatures

The reset network shown in *Figure 38* protects the device against parasitic resets. The user must ensure that the level on the NRST pin can go below $V_{IL(NRST)}$ max (see *Table 44: NRST pin characteristics*), otherwise the reset is not taken into account internally.

For power consumption sensitive applications, the external reset capacitor value can be reduced to limit the charge/discharge current. If NRST signal is used to reset external circuitry, attention must be taken to the charge/discharge time of the external capacitor to fulfill the external devices reset timing conditions. Minimum recommended capacity is 100 nF.