Analog Devices Inc./Maxim Integrated - ZLP32300P4032G Datasheet

Welcome to E-XFL.COM

What is "Embedded - Microcontrollers"?

"Embedded - Microcontrollers" refer to small, integrated circuits designed to perform specific tasks within larger systems. These microcontrollers are essentially compact computers on a single chip, containing a processor core, memory, and programmable input/output peripherals. They are called "embedded" because they are embedded within electronic devices to control various functions, rather than serving as standalone computers. Microcontrollers are crucial in modern electronics, providing the intelligence and control needed for a wide range of applications.

Applications of "Embedded - Microcontrollers"

Details	
Product Status	Obsolete
Core Processor	Z8
Core Size	8-Bit
Speed	8MHz
Connectivity	-
Peripherals	Brown-out Detect/Reset, HLVD, POR, WDT
Number of I/O	32
Program Memory Size	32KB (32K x 8)
Program Memory Type	OTP
EEPROM Size	-
RAM Size	237 x 8
Voltage - Supply (Vcc/Vdd)	2V ~ 3.6V
Data Converters	-
Oscillator Type	Internal
Operating Temperature	0°C ~ 70°C (TA)
Mounting Type	Through Hole
Package / Case	40-DIP (0.600", 15.24mm)
Supplier Device Package	40-PDIP
Purchase URL	https://www.e-xfl.com/product-detail/analog-devices/zlp32300p4032g

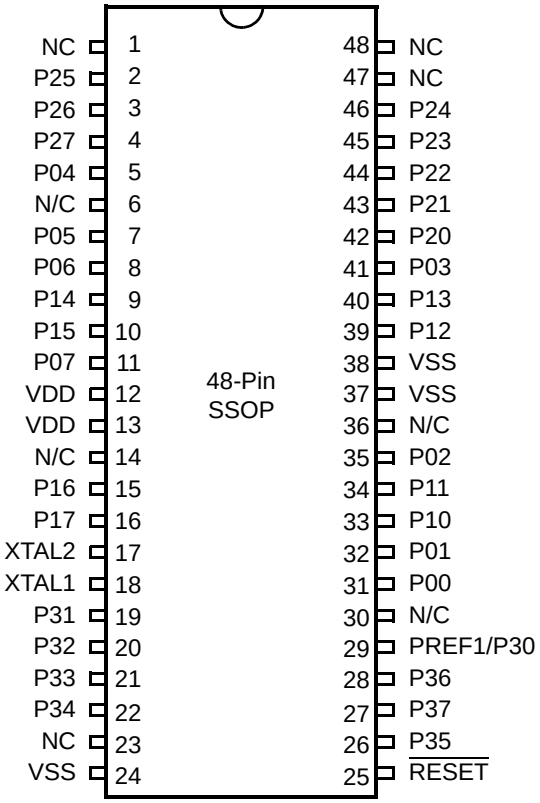

Figure 6. 48-Pin SSOP Pin Configuration

Table 5. 40- and 48-Pin Configuration

40-Pin PDIP No	48-Pin SSOP No	Symbol
26	31	P00
27	32	P01
30	35	P02
34	41	P03
5	5	P04
6	7	P05
7	8	P06
10	11	P07
28	33	P10
29	34	P11

Comparator Inputs

In ANALOG mode, P31 and P32 have a comparator front end. The comparator reference is supplied to P33 and Pref1. In this mode, the P33 internal data latch and its corresponding IRQ1 are diverted to the SMR sources (excluding P31, P32, and P33) as displayed in Figure 10 on page 15. In DIGITAL mode, P33 is used as D3 of the Port 3 input register, which then generates IRQ1.

Note: *Comparators are powered down by entering STOP mode. For P31–P33 to be used in a Stop Mode Recovery source, these inputs must be placed into DIGITAL mode.*

Comparator Outputs

These channels can be programmed to be output on P34 and P37 through the PCON register.

$\overline{\text{RESET}}$ (Input, Active Low)

Reset initializes the MCU and is accomplished either through Power-On, Watchdog Timer, Stop Mode Recovery, Low-Voltage detection, or external reset. During Power-On Reset and Watchdog Timer Reset, the internally generated reset drives the reset pin Low for the POR time. Any devices driving the external reset line must be open-drain to avoid damage from a possible conflict during reset conditions. Pull-up is provided internally.

When the ZLP32300 asserts (Low) the $\overline{\text{RESET}}$ pin, the internal pull-up is disabled. The ZLP32300 does not assert the $\overline{\text{RESET}}$ pin when under VBO.

Note: *The external Reset does not initiate an exit from STOP mode.*

register RP select the working register group. Bits 3–0 of register RP select the expanded register file bank.

Note: *An expanded register bank is also referred to as an expanded register group (see* Figure 13*).*

T8_Capture_LO—L08(D)0Ah

This register holds the captured data from the output of the 8-bit Counter/Timer0. Typically, this register holds the number of counts when the input signal is 0.

Field	Bit Position		Description
T8_Capture_L0	[7:0]	R/W	Captured Data—No Effect

T16_Capture_HI—HI16(D)09h

This register holds the captured data from the output of the 16-bit Counter/Timer16. This register holds the MS-Byte of the data.

Field	Bit Position		Description
T16_Capture_HI	[7:0]	R/W	Captured Data—No Effect

T16_Capture_LO—L016(D)08h

This register holds the captured data from the output of the 16-bit Counter/Timer16. This register holds the LS-Byte of the data.

Field	Bit Position		Description
T16_Capture_LO	[7:0]	R/W	Captured Data—No Effect

Counter/Timer2 MS-Byte Hold Register—TC16H(D)07h

Field	Bit Position		Description
T16_Data_HI	[7:0]	R/W	Data

Counter/Timer2 LS-Byte Hold Register—TC16L(D)06h

Field	Bit Position		Description
T16_Data_LO	[7:0]	R/W	Data

Table 9. CTR2(D)02h: Counter/Timer16 Control Register (Continued)

Field	Bit Position		Value	Description
T16 _Clock	---43---	R/W	00** 01 10 11	SCLK SCLK/2 SCLK/4 SCLK/8
Capture_INT_Mask	-----2--	R/W	0** 1	Disable Data Capture Int. Enable Data Capture Int.
Counter_INT_Mask	------1-	R/W	0 1	Disable Timeout Int. Enable Timeout Int.
P35_Out	-------0	R/W	0* 1	P35 as Port Output T16 Output on P35

*Indicates the value upon Power-On Reset.
**Indicates the value upon Power-On Reset. Not reset with a Stop Mode Recovery.

T16_Enable

This field enables T16 when set to 1.

Single/Modulo-N

In TRANSMIT mode, when set to 0, the counter reloads the initial value when it reaches the terminal count. When set to 1, the counter stops when the terminal count is reached.

In DEMODULATION mode, when set to 0, T16 captures and reloads on detection of all the edges. When set to 1, T16 captures and stops on the first edge but ignores the subsequent edges. For details, see T16 DEMODULATION Mode on page 41.

Time_Out

This bit is set when T16 times out (terminal count reached). To reset the bit, write a 1 to this location.

T16_Clock

This bit defines the frequency of the input signal to Counter/Timer16.

Capture_INT_Mask

This bit is set to allow an interrupt when data is captured into LO16 and HI16.

Counter_INT_Mask

Set this bit to allow an interrupt when T16 times out.

Initiating PING-PONG Mode

First, make sure both counter/timers are running. Set T8 into SINGLE-PASS mode (CTR0, D6), set T16 into SINGLE-PASS mode (CTR2, D6), and set the PING-PONG mode (CTR1, D2; D3). These instructions can be in random order. Finally, start PING-PONG mode by enabling either T8 (CTR0, D7) or T16 (CTR2, D7), see Figure 26.

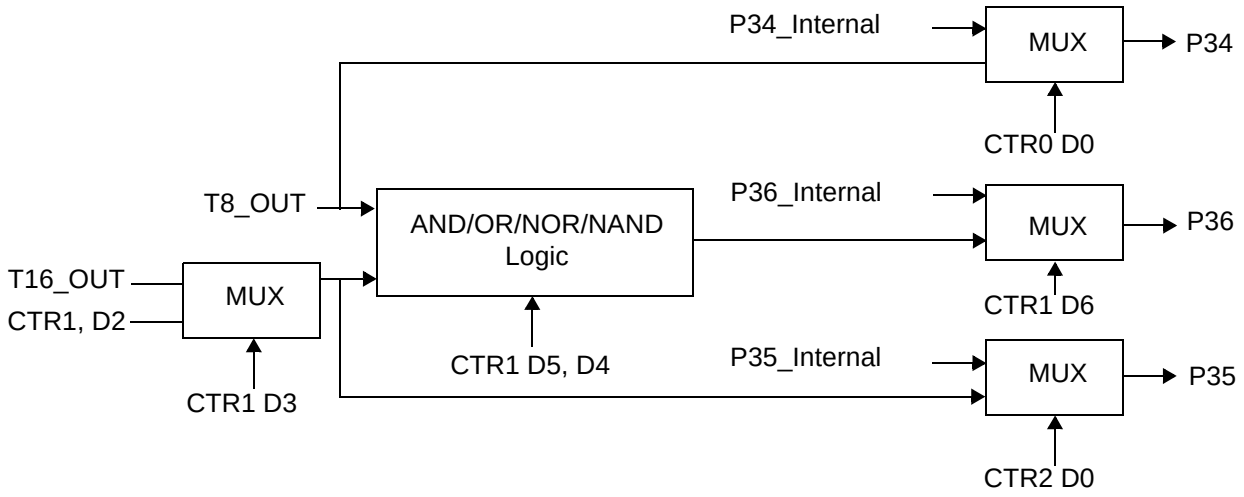

Figure 27. Output Circuit

The initial value of T8 or T16 must not be 1. If you stop the timer and restart the timer, reload the initial value to avoid an unknown previous value.

During PING-PONG Mode

The enable bits of T8 and T16 (CTR0, D7; CTR2, D7) are set and cleared alternately by hardware. The timeout bits (CTR0, D5; CTR2, D5) are set every time the counter/timers reach the terminal count.

Timer Output

The output logic for the timers is displayed in Figure 27. P34 is used to output T8-OUT when D0 of CTR0 is set. P35 is used to output the value of TI6-OUT when D0 of CTR2 is set. When D6 of CTR1 is set, P36 outputs the logic combination of T8-OUT and T16-OUT determined by D5 and D4 of CTR1.

Interrupts

The Crimzon ZLP32300 features six different interrupts (see Table 11 on page 45). The interrupts are maskable and prioritized (see Figure 29). The six sources are divided as follows: three sources are claimed by Port 3 lines P33–P31, two by the

Clock

The device's on-chip oscillator has a high-gain, parallel-resonant amplifier, for connection to a crystal, ceramic resonator, or any suitable external clock source (XTAL1 = Input, XTAL2 = Output). The crystal must be AT cut, 1 MHz to 8 MHz maximum, with a series resistance (RS) less than or equal to 100 Ω. The on-chip oscillator can be driven with a suitable external clock source.

The crystal must be connected across XTAL1 and XTAL2 using the recommended capacitors from each pin to ground. The typical capacitor value is 10 pF for 8 MHz. Also check with the crystal supplier for the optimum capacitance.

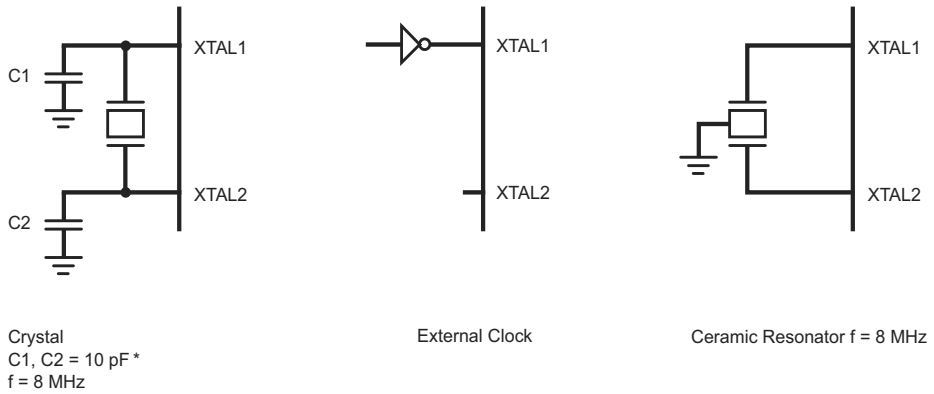

*Note: preliminary value.

Figure 29. Oscillator Configuration

Zilog's IR MCU supports crystal, resonator, and oscillator. Most resonators have a frequency tolerance of less than ±0.5%, which is enough for remote control application. Resonator has a very fast startup time, which is around few hundred microseconds. Most crystals have a frequency tolerance of less than 50 ppm (±0.005%). However, crystal needs longer startup time than the resonator. The large loading capacitance slows down the oscillation startup time. Zilog® suggests not to use more than 10 pF loading capacitor for the crystal. If the stray capacitance of the PCB or the crystal is high, the loading capacitance C1 and C2 must be reduced further to ensure stable oscillation before the T_{POR} (Power-On Reset time is typically 5-6 ms, see Table 20 on page 79).

For Stop Mode Recovery operation, bit 5 of SMR register allows you to select the Stop Mode Recovery delay, which is the T_{POR}. If Stop Mode Recovery delay is not selected, the MCU executes instruction immediately after it wakes up from the STOP mode. If resonator or crystal is used as a clock source, then Stop Mode Recovery delay needs to be selected (bit 5 of SMR = 1).

WDT Time Select (D0, D1)

This bit selects the WDT time period. It is configured as indicated in Table 15.

Table 15. Watchdog Timer Time Select

D1	D0	Timeout of Internal RC-Oscillator
0	0	5 ms min
0	1	10 ms min
1	0	20 ms min
1	1	80 ms min

WDTMR During Halt (D2)

This bit determines whether or not the WDT is active during HALT mode. A 1 indicates active during HALT. The default is 1, see Figure 36.

CTR3(0D)03H

D7	D6	D5	D4	D3	D2	D1	D0

Reserved
No effect when written
Always reads 11111

Sync Mode
0* Disable Sync Mode**
1 Enable Sync Mode

T_8 Enable
R 0* T_8 Disabled
R 1 T_8 Enabled
W0 Stop T_8
W1 Enable T_8

T_{16} Enable
R 0* T_{16} Disabled
R 1 T_{16} Enabled
W 0 Stop T_{16}
W 1 Enable T_{16}

*Default setting after reset.
**Default setting after reset. Not reset with a Stop Mode Recovery.

Figure 40. T8/T16 Control Register (0D)03H: Read/Write (Except Where Noted)

Note: *If Sync Mode is enabled, the first pulse of T8 carrier is always synchronized with T16 (demodulated signal). It can always provide a full carrier pulse.*

SMR(0F)0BH

D7	D6	D5	D4	D3	D2	D1	D0

SCLK/TCLK Divide-by-16
0 OFF *
1 ON

Reserved (Must be 0)

Stop Mode Recovery Source
000 POR Only *
001 Reserved
010 P31
011 P32
100 P33
101 P27
110 P2 NOR 0–3
111 P2 NOR 0–7

Stop Delay
0 OFF
1 ON * * * *

Stop Recovery Level * * *
0 Low *
1 High

Stop Flag
0 POR * * * * *
1 Stop Recovery * *

*Default setting after Reset
* *Set after Stop Mode Recovery
* * *At the XOR gate input
* * * *Default setting after Reset. Must be 1 if using a crystal or resonator clock source.
* * * * *Default setting after Power-On Reset. Not Reset with a Stop Mode Recovery.

Figure 43. Stop Mode Recovery Register ((0F)0BH: D6–D0=Write Only, D7=Read Only)

SMR2(0F)0DH

D7	D6	D5	D4	D3	D2	D1	D0

Reserved (Must be 0)

Reserved (Must be 0)

Stop Mode Recovery Source 2
000 POR Only *
001 NAND P20, P21, P22, P23
010 NAND P20, P21, P22, P23, P24, P25, P26, P27
011 NOR P31, P32, P33
100 NAND P31, P32, P33
101 NOR P31, P32, P33, P00, P07
110 NAND P31, P32, P33, P00, P07
111 NAND P31, P32, P33, P20, P21, P22

Reserved (Must be 0)

Recovery Level * *
0 Low
1 High

Reserved (Must be 0)

If used in conjunction with SMR, either of the two specified events causes a Stop Mode Recovery.
*Default setting after reset. Not Reset with a Stop Mode Recovery.
* *At the XOR gate input

Figure 44. Stop Mode Recovery Register 2 ((0F)0DH:D2–D4, D6 Write Only)

WDTMR(0F)0FH

D7	D6	D5	D4	D3	D2	D1	D0

WDT TAP INT RC OSC
00 5 ms min.
01* 10 ms min.
10 20 ms min.
11 80 ms min.

WDT During HALT
0 OFF
1 ON *

WDT During Stop
0 OFF
1 ON *

Reserved (Must be 0)

*Default setting after reset. Not Reset with a Stop Mode Recovery.

Figure 45. Watchdog Timer Register ((0F) 0FH: Write Only)

R249 IPR(F9H)

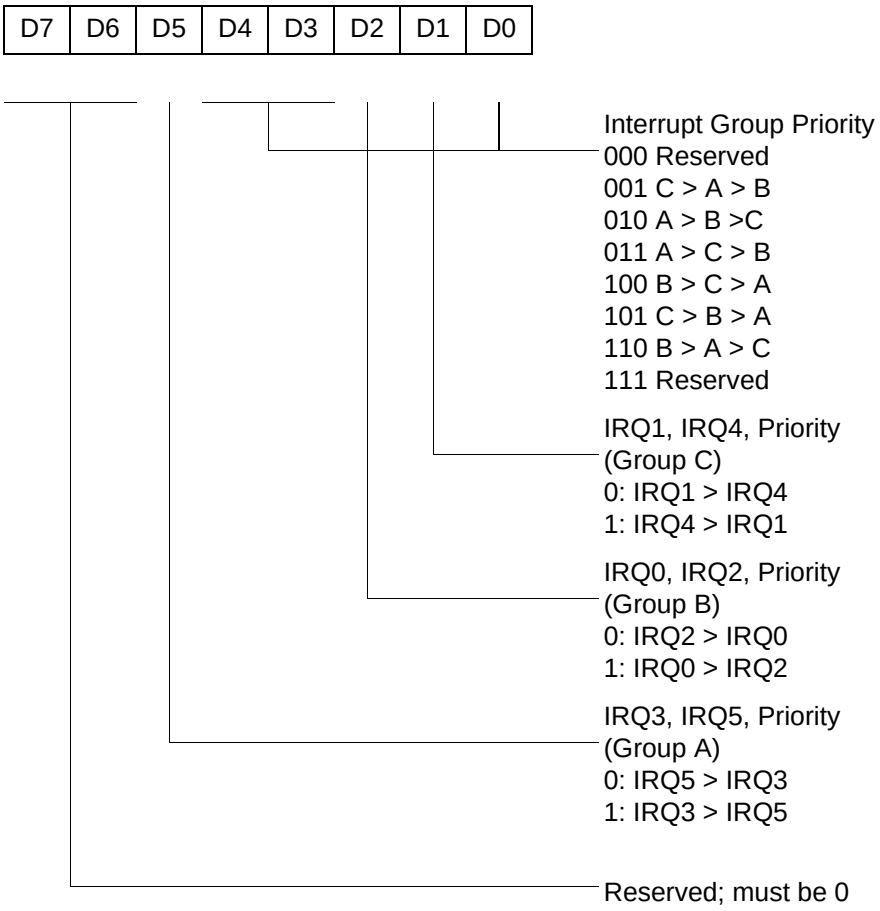

Figure 49. Interrupt Priority Register (F9H: Write Only)

Device	Part Number	Description
	ZLP32300P2008G	20-pin PDIP 8 K OTP
	ZLP32300S2008G	20-pin SOIC 8 K OTP
	ZLP32300H4804G	48-pin SSOP 4 K OTP
	ZLP32300P4004G	40-pin PDIP 4 K OTP
	ZLP32300H2804G	28-pin SSOP 4 K OTP
	ZLP32300P2804G	28-pin PDIP 4 K OTP
	ZLP32300S2804G	28-pin SOIC 4 K OTP
	ZLP32300H2004G	20-pin SSOP 4 K OTP
	ZLP32300P2004G	20-pin PDIP 4 K OTP
	ZLP32300S2004G	20-pin SOIC 4 K OTP
	ZLP323ICE01ZAC*	40-PDIP/48-SSOP Accessory Kit
	Note: *ZLP323ICE01ZAC has been replaced by an improved version, ZCRMZNICE02ZACG.	
	ZLP128ICE01ZEMG	In-Circuit Emulator
	Note: *ZLP128ICE01ZEMG has been replaced by an improved version, ZCRMZNICE01ZEMG.	
	ZCRMZNICE01ZEMG	Crimzon In-Circuit Emulator
	ZCRMZN00100KITG	Crimzon In-Circuit Emulator Development Kit
	ZCRMZNICE01ZACG	20-Pin Accessory Kit
	ZCRMZNICE02ZACG	40/48-Pin Accessory Kit

Notes
1. Replace C with G for Lead-Free Packaging.
2. Contact www.zilog.com for the die form.

For fast results, contact your local Zilog® sales office for assistance in ordering the part(s) desired.

Index

Numerics

16-bit counter/timer circuits 40
20-pin DIP package diagram 80
20-pin SSOP package diagram 82
28-pin DIP package diagram 84
28-pin SOIC package diagram 83
28-pin SSOP package diagram 85
40-pin DIP package diagram 85
48-pin SSOP package diagram 86
8-bit counter/timer circuits 36

A

absolute maximum ratings 75
AC
  characteristics 78
  timing diagram 78
address spaces, basic 1
architecture 1
  expanded register file 22

B

basic address spaces 1
block diagram, ZLP32300 functional 3

C

capacitance 76
characteristics
  AC 78
  DC 76
clock 46
comparator inputs/outputs 18
configuration
  port 0 12
  port 1 13
  port 2 14
  port 3 15
  port 3 counter/timer 17
counter/timer
  16-bit circuits 40
  8-bit circuits 36
  brown-out voltage/standby 58
  clock 46
  demodulation mode count capture flowchart 38
  demodulation mode flowchart 39
  EPROM selectable options 53
  glitch filter circuitry 34
  halt instruction 47
  input circuit 33
  interrupt block diagram 44
  interrupt types, sources and vectors 45
  oscillator configuration 46
  output circuit 43
  port configuration register 48
  resets and WDT 57
  SCLK circuit 50
  stop instruction 47
  stop mode recovery register 49
  stop mode recovery register 2 52
  stop mode recovery source 52
  T16 demodulation mode 41
  T16 transmit mode 40
  T16_OUT in modulo-N mode 41
  T16_OUT in single-pass mode 41
  T8 demodulation mode 37
  T8 transmit mode 34
  T8_OUT in modulo-N mode 37
  T8_OUT in single-pass mode 37
  transmit mode flowchart 35
  voltage detection and flags 59
  watch-dog timer mode register 55
  watch-dog timer time select 56
CTR(D)01h T8 and T16 Common Functions 29

D

DC characteristics 76
demodulation mode
  count capture flowchart 38
  flowchart 39
  T16 41

Customer Support

For answers to technical questions about the product, documentation, or any other issues with Zilog's offerings, please visit Zilog's Knowledge Base at http://www.zilog.com/kb.

For any comments, detail technical questions, or reporting problems, please visit Zilog's Technical Support at http://support.zilog.com.