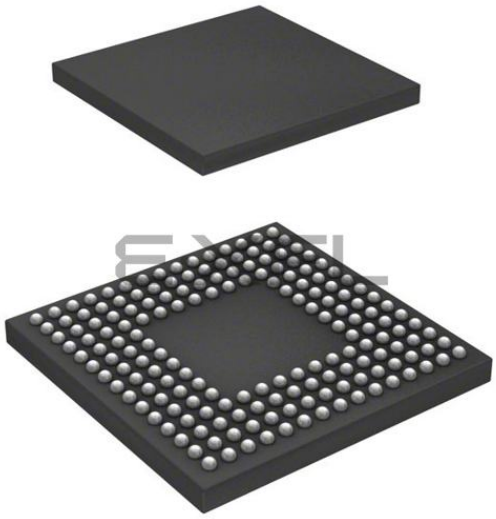

Welcome to E-XFL.COM

What is "Embedded - Microcontrollers"?

"Embedded - Microcontrollers" refer to small, integrated circuits designed to perform specific tasks within larger systems. These microcontrollers are essentially compact computers on a single chip, containing a processor core, memory, and programmable input/output peripherals. They are called "embedded" because they are embedded within electronic devices to control various functions, rather than serving as standalone computers. Microcontrollers are crucial in modern electronics, providing the intelligence and control needed for a wide range of applications.

Applications of "Embedded - Microcontrollers"

Details	
Product Status	Not For New Designs
Core Processor	RX
Core Size	32-Bit Single-Core
Speed	100MHz
Connectivity	CANbus, EBI/EMI, I²C, LINbus, SCI, SPI, USB
Peripherals	DMA, LVD, POR, PWM, WDT
Number of I/O	133
Program Memory Size	384KB (384K x 8)
Program Memory Type	FLASH
EEPROM Size	32K x 8
RAM Size	128K x 8
Voltage - Supply (Vcc/Vdd)	2.7V ~ 3.6V
Data Converters	A/D 8x10b, 21x12b; D/A 2x10b
Oscillator Type	Internal
Operating Temperature	-40°C ~ 85°C (TA)
Mounting Type	Surface Mount
Package / Case	176-LFBGA
Supplier Device Package	176-LFBGA (13x13)
Purchase URL	https://www.e-xfl.com/product-detail/renesas-electronics-america/r5f56317cdbg-u0

Table 1.1 Outline of Specifications (3/6)

Classification	Module/Function	Description
I/O ports	General I/O ports	• I/O ports for the 177-pin TFLGA, 176-pin LFBGA and 176-pin LQFP I/O pins: 133 Input pins: 1 Pull-up resistors: 133 Open-drain outputs: 133 5-V tolerance: 18 • I/O ports for the 145-pin TFLGA and 144-pin LQFP I/O pins: 111 Input pins: 1 Pull-up resistors: 111 Open-drain outputs: 111 5-V tolerance: 18 • I/O ports for the 100-pin TFLGA (in the planning stage) and 100-pin LQFP I/O pins: 78 Input pins: 1 Pull-up resistors: 78 Open-drain outputs: 78 5-V tolerance: 17 • I/O ports for the 64-pin TFLGA I/O pins: 39 Input pin: 1 Pull-up resistors: 39 Open-drain outputs: 39 5-V tolerance: 8 • I/O ports for the 64-pin LQFP I/O pins: 42 Input pin: 1 Pull-up resistors: 42 Open-drain outputs: 42 5-V tolerance: 8 8-bit port switching function • I/O ports for the 48-pin LQFP I/O pins: 30 Input pin: 1 Pull-up resistors: 30 Open-drain outputs: 30 5-V tolerance: 6 8-bit port switching function

1.2 List of Products

Table 1.3 is a list of products, and Figure 1.1 shows how to read the product part no.

Table 1.3 List of Products (1/8)

Group	Part No.	Package	ROM Capacity	RAM Capacity	E2 Data Flash	Operating Frequency (Max.)	Operating Temp. Range
RX63N (D version)	R5F563NECDLC	PTLG0177KA-A	2 Mbytes	128 Kbytes	32 Kbytes	100 MHz	-40 to +85°C
	R5F563NEDDLC	PTLG0177KA-A	2 Mbytes	128 Kbytes	32 Kbytes	100 MHz	-40 to +85°C
	R5F563NDCDLC	PTLG0177KA-A	1.5 Mbytes	128 Kbytes	32 Kbytes	100 MHz	-40 to +85°C
	R5F563NDDDLC	PTLG0177KA-A	1.5 Mbytes	128 Kbytes	32 Kbytes	100 MHz	-40 to +85°C
	R5F563NBCDLC	PTLG0177KA-A	1 Mbyte	128 Kbytes	32 Kbytes	100 MHz	-40 to +85°C
	R5F563NBDDLC	PTLG0177KA-A	1 Mbyte	128 Kbytes	32 Kbytes	100 MHz	-40 to +85°C
	R5F563NACDLC	PTLG0177KA-A	768 Kbytes	128 Kbytes	32 Kbytes	100 MHz	-40 to +85°C
	R5F563NADDLC	PTLG0177KA-A	768 Kbytes	128 Kbytes	32 Kbytes	100 MHz	-40 to +85°C
	R5F563NECDBG	PLBG0176GA-A	2 Mbytes	128 Kbytes	32 Kbytes	100 MHz	-40 to +85°C
	R5F563NEDDBG	PLBG0176GA-A	2 Mbytes	128 Kbytes	32 Kbytes	100 MHz	-40 to +85°C
	R5F563NDCDBG	PLBG0176GA-A	1.5 Mbytes	128 Kbytes	32 Kbytes	100 MHz	-40 to +85°C
	R5F563NDDDBG	PLBG0176GA-A	1.5 Mbytes	128 Kbytes	32 Kbytes	100 MHz	-40 to +85°C
	R5F563NBCDBG	PLBG0176GA-A	1 Mbyte	128 Kbytes	32 Kbytes	100 MHz	-40 to +85°C
	R5F563NBDDBG	PLBG0176GA-A	1 Mbyte	128 Kbytes	32 Kbytes	100 MHz	-40 to +85°C
	R5F563NACDBG	PLBG0176GA-A	768 Kbytes	128 Kbytes	32 Kbytes	100 MHz	-40 to +85°C
	R5F563NADDBG	PLBG0176GA-A	768 Kbytes	128 Kbytes	32 Kbytes	100 MHz	-40 to +85°C
	R5F563NFHDFC	PLQP0176KB-A	2 Mbytes	256 Kbytes	32 Kbytes	100 MHz	-40 to +85°C
	R5F563NFDDFC	PLQP0176KB-A	2 Mbytes	256 Kbytes	32 Kbytes	100 MHz	-40 to +85°C
	R5F563NKHDFC	PLQP0176KB-A*1	2 Mbytes	192 Kbytes	32 Kbytes	100 MHz	-40 to +85°C
	R5F563NKDDFC	PLQP0176KB-A	2 Mbytes	192 Kbytes	32 Kbytes	100 MHz	-40 to +85°C
	R5F563NECDFC	PLQP0176KB-A	2 Mbytes	128 Kbytes	32 Kbytes	100 MHz	-40 to +85°C
	R5F563NEDDFC	PLQP0176KB-A	2 Mbytes	128 Kbytes	32 Kbytes	100 MHz	-40 to +85°C
	R5F563NJHDFC	PLQP0176KB-A*1	1.5 Mbytes	256 Kbytes	32 Kbytes	100 MHz	-40 to +85°C
	R5F563NJDDFC	PLQP0176KB-A*1	1.5 Mbytes	256 Kbytes	32 Kbytes	100 MHz	-40 to +85°C
	R5F563NGHDFC	PLQP0176KB-A*1	1.5 Mbytes	192 Kbytes	32 Kbytes	100 MHz	-40 to +85°C
	R5F563NGDDFC	PLQP0176KB-A*1	1.5 Mbytes	192 Kbytes	32 Kbytes	100 MHz	-40 to +85°C
	R5F563NDCDFC	PLQP0176KB-A	1.5 Mbytes	128 Kbytes	32 Kbytes	100 MHz	-40 to +85°C
	R5F563NDDDFC	PLQP0176KB-A	1.5 Mbytes	128 Kbytes	32 Kbytes	100 MHz	-40 to +85°C
	R5F563NYHDFC	PLQP0176KB-A	1 Mbyte	256 Kbytes	32 Kbytes	100 MHz	-40 to +85°C
	R5F563NYDDFC	PLQP0176KB-A	1 Mbyte	256 Kbytes	32 Kbytes	100 MHz	-40 to +85°C
	R5F563NWHDFC	PLQP0176KB-A	1 Mbyte	192 Kbytes	32 Kbytes	100 MHz	-40 to +85°C
	R5F563NWDDFC	PLQP0176KB-A	1 Mbyte	192 Kbytes	32 Kbytes	100 MHz	-40 to +85°C
	R5F563NWGDFC	PLQP0176KB-A	1 Mbyte	192 Kbytes	32 Kbytes	100 MHz	-40 to +85°C
	R5F563NWCDFC	PLQP0176KB-A	1 Mbyte	192 Kbytes	32 Kbytes	100 MHz	-40 to +85°C
	R5F563NBCDFC	PLQP0176KB-A	1 Mbyte	128 Kbytes	32 Kbytes	100 MHz	-40 to +85°C
	R5F563NBDDFC	PLQP0176KB-A	1 Mbyte	128 Kbytes	32 Kbytes	100 MHz	-40 to +85°C
	R5F563NACDFC	PLQP0176KB-A	768 Kbytes	128 Kbytes	32 Kbytes	100 MHz	-40 to +85°C
	R5F563NADDFC	PLQP0176KB-A	768 Kbytes	128 Kbytes	32 Kbytes	100 MHz	-40 to +85°C
	R5F563NECDLK	PTLG0145KA-A	2 Mbytes	128 Kbytes	32 Kbytes	100 MHz	-40 to +85°C
	R5F563NEDDLK	PTLG0145KA-A	2 Mbytes	128 Kbytes	32 Kbytes	100 MHz	-40 to +85°C
	R5F563NDCDLK	PTLG0145KA-A	1.5 Mbytes	128 Kbytes	32 Kbytes	100 MHz	-40 to +85°C

Table 1.3 List of Products (8/8)

Group	Part No.	Package	ROM Capacity	RAM Capacity	E2 Data Flash	Operating Frequency (Max.)	Operating Temp. Range
RX631 (G version) *2	R5F5631GDGFB	PLQP0144KA-A	1.5 Mbytes	192 Kbytes	32 Kbytes	100 MHz	-40 to +105°C
	R5F5631DDGFB	PLQP0144KA-A	1.5 Mbytes	128 Kbytes	32 Kbytes	100 MHz	-40 to +105°C
	R5F5631YDGFB	PLQP0144KA-A	1 Mbyte	256 Kbytes	32 Kbytes	100 MHz	-40 to +105°C
	R5F5631WDGFB	PLQP0144KA-A	1 Mbyte	192 Kbytes	32 Kbytes	100 MHz	-40 to +105°C
	R5F5631BDGFB	PLQP0144KA-A	1 Mbyte	128 Kbytes	32 Kbytes	100 MHz	-40 to +105°C
	R5F5631ADGFB	PLQP0144KA-A	768 Kbytes	128 Kbytes	32 Kbytes	100 MHz	-40 to +105°C
	R5F56318SGFB	PLQP0144KA-A	512 Kbytes	128 Kbytes	32 Kbytes	100 MHz	-40 to +105°C
	R5F56318DGFB	PLQP0144KA-A	512 Kbytes	128 Kbytes	32 Kbytes	100 MHz	-40 to +105°C
	R5F56317SGFB	PLQP0144KA-A	384 Kbytes	128 Kbytes	32 Kbytes	100 MHz	-40 to +105°C
	R5F56317DGFB	PLQP0144KA-A	384 Kbytes	128 Kbytes	32 Kbytes	100 MHz	-40 to +105°C
	R5F56316SGFB	PLQP0144KA-A	256 Kbytes	128 Kbytes	32 Kbytes	100 MHz	-40 to +105°C
	R5F56316DGFB	PLQP0144KA-A	256 Kbytes	128 Kbytes	32 Kbytes	100 MHz	-40 to +105°C
	R5F5631FDGFP	PLQP0100KB-A	2 Mbytes	256 Kbytes	32 Kbytes	100 MHz	-40 to +105°C
	R5F5631KDGFP	PLQP0100KB-A	2 Mbytes	192 Kbytes	32 Kbytes	100 MHz	-40 to +105°C
	R5F5631EDGFP	PLQP0100KB-A	2 Mbytes	128 Kbytes	32 Kbytes	100 MHz	-40 to +105°C
	R5F5631JDGFP	PLQP0100KB-A	1.5 Mbytes	256 Kbytes	32 Kbytes	100 MHz	-40 to +105°C
	R5F5631GDGFP	PLQP0100KB-A	1.5 Mbytes	192 Kbytes	32 Kbytes	100 MHz	-40 to +105°C
	R5F5631DDGFP	PLQP0100KB-A	1.5 Mbytes	128 Kbytes	32 Kbytes	100 MHz	-40 to +105°C
	R5F5631YDGFP	PLQP0100KB-A	1 Mbyte	256 Kbytes	32 Kbytes	100 MHz	-40 to +105°C
	R5F5631WDGFP	PLQP0100KB-A	1 Mbyte	192 Kbytes	32 Kbytes	100 MHz	-40 to +105°C
	R5F5631BDGFP	PLQP0100KB-A	1 Mbyte	128 Kbytes	32 Kbytes	100 MHz	-40 to +105°C
	R5F5631ADGFP	PLQP0100KB-A	768 Kbytes	128 Kbytes	32 Kbytes	100 MHz	-40 to +105°C
	R5F56318DGFP	PLQP0100KB-A	512 Kbytes	128 Kbytes	32 Kbytes	100 MHz	-40 to +105°C
	R5F56317DGFP	PLQP0100KB-A	384 Kbytes	128 Kbytes	32 Kbytes	100 MHz	-40 to +105°C
	R5F56316DGFP	PLQP0100KB-A	256 Kbytes	128 Kbytes	32 Kbytes	100 MHz	-40 to +105°C
	R5F5631PDGFM	PLQP0064KB-A	512 Kbytes	64 Kbytes	32 Kbytes	100 MHz	-40 to +105°C
	R5F5631NDGFM	PLQP0064KB-A	384 Kbytes	64 Kbytes	32 Kbytes	100 MHz	-40 to +105°C
	R5F5631MDGFM	PLQP0064KB-A	256 Kbytes	64 Kbytes	32 Kbytes	100 MHz	-40 to +105°C
	R5F5631PDGFL	PLQP0048KB-A	512 Kbytes	64 Kbytes	32 Kbytes	100 MHz	-40 to +105°C
	R5F5631NDGFL	PLQP0048KB-A	384 Kbytes	64 Kbytes	32 Kbytes	100 MHz	-40 to +105°C
	R5F5631MDGFL	PLQP0048KB-A	256 Kbytes	64 Kbytes	32 Kbytes	100 MHz	-40 to +105°C

Note 1. In the planning stage

Note 2. The specifications of the temperature sensor calibration and unique ID for G-version products differ from those for other products. For details, see section 45.2.2, Temperature Sensor Calibration Data Registers (TSCDRH, TSCDRL), section 45.3, Using the Temperature Sensor, and section 47.2.22, Unique ID Registers n (UIDRn) (n = 0 to 15) in the User's manual: Hardware.

Table 1.5 List of Pin and Pin Functions (177-Pin TFLGA, 176-Pin LFBGA) (4/5)

Pin Number 177-Pin TFLGA 176-Pin LFBGA	Power Supply Clock System Control	I/O Port	Bus EXDMAC SDRAMC	Timer (MTU, TPU, TMR, PPG, RTC, POE)	Communications (ETHERC, SCIc, SCId, RSPI, RIIC, CAN, IEB, USB, and PDC)	Interrupt	S12AD, AD, DA
M2		P26	CS6#	MTIOC2A/TMO1/PO6	TXD1/CTS3#/RTS3# SMOSI1/SS3#/SSDA1/ MOSIB		
M3		P24	CS4#/EDREQ1	MTIOC4A/MTCLKA/ TIOCB4/TMRI1/PO4	SCK3/USB0_VBUSEN/ PIXCLK		
M4		P86		TIOCA0	PIXD1		
M5		P13		MTIOC0B/TIOCA5/TMO3/ PO13	TXD2/SMOSI2/SSDA2/ SDA0[FM+]	IRQ3	ADTRG#
M6		P56	WR2#/BC2#/ EDACK1	MTIOC3C/TIOCA1			
M7		P54	ALE/EDACK0	MTIOC4B/TMCI1	ET_LINKSTA/CTS2#/ RTS2#/SS2#/CTX1		
M8		P53*2	BCLK				
M9		P50	WR0#/WR#		TXD2/SMOSI2/SSDA2/ SSLB1		
M10		PC5	A21/CS2#/ WAIT#	MTIOC3B/MTCLKD/ TIOCD6/TCLKF/TMRI2/ PO29	ET_ETXD2/SCK8/ RSPCKA		
M11		P81	EDACK0	MTIOC3D/PO27	ET_ETXD0/RMII_TXD0/ RXD10/SMISO10/SSCL10		
M12		P77	CS7#	PO23	ET_RX_ER/RMII_RX_ER/ TXD11/SMOSI11/SSDA11		
M13		PB7	A15	MTIOC3B/TIOCB5/PO31	ET_CRS/RMII_CRS_DV/ TXD9/SMOSI9/SSDA9		
M14		PB5	A13	MTIOC2A/MTIOC1B/ TIOCB4/TMRI1/PO29/ POE1#	ET_ETXD0/RMII_TXD0/ SCK9		
M15		PB4	A12	TIOCA4/PO28	ET_TX_EN/ RMII_TXD_EN/CTS9#/ RTS9#/SS9#		
N1	VCC						
N2		P23	EDACK0	MTIOC3D/MTCLKD/ TIOCD3/PO3	TXD3/CTS0#/RTS0#/ SMOSI3/SS0#/SSDA3/ USB0_DPUPE/PIXD7		
N3		P22	EDREQ0	MTIOC3B/MTCLKC/ TIOCC3/TMO0/PO2	SCK0/USB0_DRPD/ PIXD6		
N4		P15		MTIOC0B/MTCLKB/ TIOCB2/TCLKB/TMCI2/ PO13	RXD1/SCK3/SMISO1/ SSCL1/CRX1-DS/ USB1_DPUPE/PIXD0	IRQ5	
N5		P12		MTIC5U/TMCI1	RXD2/SMISO2/SSCL2/ SCL0[FM+]	IRQ2	
N6		P57	WAIT#/WR3#/ BC3#/EDREQ1				
N7		P55	WAIT#/ EDREQ0	MTIOC4D/TMO3	ET_EXOUT/CRX1	IRQ10	
N8	VCC_USB						
N9		P51	WR1#/BC1#/ WAIT#		SCK2/SSLB2		
N10		PC7	A23/CS0#	MTIOC3A/MTCLKB/ TIOCB6/TMO2/PO31	ET_COL/TXD8/SMOSI8/ SSDA8/MISOA	IRQ14	
N11		P82	EDREQ1	MTIOC4A/PO28	ET_ETXD1/RMII_TXD1/ TXD10/SMOSI10/SSDA10		
N12		PC3	A19	MTIOC4D/TCLKB/PO24	ET_TX_ER/TXD5/ SMOSI5/SSDA5/IETXD		
N13		PC0	A16	MTIOC3C/TCLKC/PO17	ET_ERXD3/CTS5#/ RTS5#/SS5#/SSLA1/ SCL3	IRQ14	
N14		P73	CS3#	PO16	ET_WOL		
N15	VSS						

Table 1.6 List of Pin and Pin Functions (176-Pin LQFP) (2/5)

Pin Number 176-Pin LQFP	Power Supply Clock System Control	I/O Port	Bus EXDMAC SDRAMC	Timer (MTU, TPU, TMR, PPG, RTC, POE)	Communications (ETHERC, SCIc, SCId, RSPI, RIIC, CAN, IEB, USB, and PDC)	Interrupt	S12AD, AD, DA
41	VSS						
42		P23	EDACK0	MTIOC3D/MTCLKD/ TIOCD3/PO3	TXD3/CTS0#/RTS0#/ SMOSI3/SS0#/SSDA3/ USB0_DPUPE/PIXD7		
43		P22	EDREQ0	MTIOC3B/MTCLKC/ TIOCC3/TMO0/PO2	SCK0/USB0_DRPD/ PIXD6		
44		P21		MTIOC1B/TIOCA3/ TMCI0/PO1	RXD0/SMISO0/SSCL0/ SCL1/USB0_EXICEN/ PIXD5	IRQ9	
45		P20		MTIOC1A/TIOCB3/ TMRI0/PO0	TXD0/SMOSI0/SSDA0/ SDA1/USB0_ID/PIXD4	IRQ8	
46		P17		MTIOC3A/MTIOC3B/ TIOCB0/TCLKD/TMO1/ PO15/POE8#	SCK1/TXD3/SMOSI3/ SSDA3/MISOA/SDA2-DS/ IETXD/USB1_VBUS/ PIXD3	IRQ7	ADTRG#
47		P87		TIOCA2	PIXD2		
48		P16		MTIOC3C/MTIOC3D/ TIOCB1/TCLKC/TMO2/ PO14/RTCOUT	TXD1/RXD3/SMOSI1/ SMISO3/SSDA1/SSCL3/ MOSIA/SCL2-DS/IERXD/ USB0_VBUS/ USB0_VBUSEN/ USB0_OVRCURB	IRQ6	ADTRG0#
49		P86		TIOCA0	PIXD1		
50		P15		MTIOC0B/MTCLKB/ TIOCB2/TCLKB/TMCI2/ PO13	RXD1/SCK3/SMISO1/ SSCL1/CRX1-DS/ USB1_DPUPE/PIXD0	IRQ5	
51		P14		MTIOC3A/MTCLKA/ TIOCB5/TCLKA/TMRI2/ PO15	CTS1#/RTS1#/SS1#/ CTX1/USB0_DPUPE/ USB0_OVRCURA	IRQ4	
52		P85					
53		P13		MTIOC0B/TIOCA5/TMO3/ PO13	TXD2/SMOSI2/SSDA2/ SDA0[FM+]	IRQ3	ADTRG#
54		P12		MTIC5U/TMCI1	RXD2/SMISO2/SSCL2/ SCL0[FM+]	IRQ2	
55		P11		MTIC5V/TMCI3	SCK2	IRQ1	
56		P10		MTIC5W/TMRI3		IRQ0	
57	VCC_USB						
58					USB0_DM		
59					USB0_DP		
60	VSS_USB						
61		P57	WAIT#/WR3#/ BC3#/EDREQ1				
62		P56	WR2#/BC2#/ EDACK1	MTIOC3C/TIOCA1			
63					USB1_DM		
64					USB1_DP		
65	VCC_USB						
66		P55	WAIT#/ EDREQ0	MTIOC4D/TMO3	ET_EXOUT/CRX1	IRQ10	
67		P54	ALE/EDACK0	MTIOC4B/TMCI1	ET_LINKSTA/CTS2#/ RTS2#/SS2#/CTX1		
68		P53*1	BCLK				
69		P84					
70		P52	RD#		RXD2/SMISO2/SSCL2/ SSLB3		
71		P51	WR1#/BC1#/ WAIT#		SCK2/SSLB2		

Table 1.6 List of Pin and Pin Functions (176-Pin LQFP) (5/5)

Pin Number 176-Pin LQFP	Power Supply Clock System Control	I/O Port	Bus EXDMAC SDRAMC	Timer (MTU, TPU, TMR, PPG, RTC, POE)	Communications (ETHERC, SCIc, SCId, RSPI, RIIC, CAN, IEB, USB, and PDC)	Interrupt	S12AD, AD, DA
136		P64	CS4#/WE#				
137		P63	CS3#/CAS#				
138		P62	CS2#/RAS#				
139		P61	CS1#/SDCS#				
140	VSS						
141		P60	CS0#				
142	VCC						
143		PD7	D7[A7/D7]	MTIC5U/POE0#	SSLC3	IRQ7	AN7
144		PG1	D25				
145		PD6	D6[A6/D6]	MTIC5V/POE1#	SSLC2	IRQ6	AN6
146		PG0	D24				
147		PD5	D5[A5/D5]	MTIC5W/POE2#	SSLC1	IRQ5	AN013
148		PD4	D4[A4/D4]	POE3#	SSLC0	IRQ4	AN012
149		P97	A23/D23				
150		PD3	D3[A3/D3]	TIOCB8/TCLKH/POE8#	RSPCKC	IRQ3	AN011
151	VSS						
152		P96	A22/D22				
153	VCC						
154		PD2	D2[A2/D2]	MTIOC4D/TIOCA8	MISOC/CRX0	IRQ2	AN010
155		P95	A21/D21				
156		PD1	D1[A1/D1]	MTIOC4B/TIOCB7/ TCLKG	MOSIC/CTX0	IRQ1	AN009
157		P94	A20/D20				
158		PD0	D0[A0/D0]	TIOCA7		IRQ0	AN008
159		P93	A19/D19		CTS7#/RTS7#/SS7#		AN017
160		P92	A18/D18		RXD7/SMISO7/SSCL7		AN016
161		P91	A17/D17		SCK7		AN015
162	VSS						
163		P90	A16/D16		TXD7/SMOSI7/SSDA7		AN014
164	VCC						
165		P47				IRQ15-DS	AN007
166		P46				IRQ14-DS	AN006
167		P45				IRQ13-DS	AN005
168		P44				IRQ12-DS	AN004
169		P43				IRQ11-DS	AN003
170		P42				IRQ10-DS	AN002
171		P41				IRQ9-DS	AN001
172	VREFL0						
173		P40				IRQ8-DS	AN000
174	VREFH0						
175	AVCC0						
176		P07				IRQ15	ADTRG0#

Note 1. The BCLK function is multiplexed with the I/O port function for pin P53, so the port function is not available if the external bus is enabled.

Note 2. Enabled only for the ROM capacity: 2 Mbytes/1.5 Mbytes

Table 1.9 List of Pins and Pin Functions (100-Pin TFLGA) (1/5)

Pin No. 100-pin TFLGA	Power Supply Clock System Control	I/O Port	Bus EXDMAC	Timers (MTU, TPU, TMR, PPG, RTC, POE)	Communications (ETHERC, SCIc, SCId, RSPI, RIIC, CAN, IEB, USB)	Interrupt	S12AD AD DA
A1		P05				IRQ13	DA1
A2	VREFH						
A3		P07				IRQ15	ADTRG0#
A4	VREFL0						
A5		P43				IRQ11-DS	AN003
A6		PD0	D0[A0/D0]			IRQ0	AN008
A7		PD4	D4[A4/D4]	POE3#		IRQ4	AN012
A8		PE0	D8[A8/D8]		SCK12/SSLB1		ANEX0
A9		PE1	D9[A9/D9]	MTIOC4C/ PO18	TXD12/SMOSI12/ SSDA12/TXDX12/ SIOX12/SSLB2/ RSPCKB		ANEX1
A10		PE2	D10[A10/D10]	MTIOC4A/ PO23	RXD12/SMISO12/ SSCL12/RXDX12/ SSLB3/MOSIB	IRQ7-DS	AN0
B1	EMLE						
B2	AVSS0						
B3	AVCC0						
B4		P40				IRQ8-DS	AN000
B5		P44				IRQ12-DS	AN004
B6		PD1	D1[A1/D1]	MTIOC4B	CTX0*1	IRQ1	AN009
B7		PD3	D3[A3/D3]	POE8#		IRQ3	AN011
B8		PD6	D6[A6/D6]	MTIC5V/ POE1#		IRQ6	AN6
B9		PD7	D7[A7/D7]	MTIC5U/ POE0#		IRQ7	AN7
B10		PE3	D11[A11/D11]	MTIOC4B/ PO26/POE8#	CTS12#/RTS12#/ SS12#/MISOB/ ET_ERXD3		AN1
C1	VCL						
C2	VREFL						
C3		PJ3		MTIOC3C	CTS6#/RTS6#/ CTS0#/RTS0#/ SS6#/SS0#		
C4	VREFH0						
C5		P42				IRQ10-DS	AN002
C6		P47				IRQ15-DS	AN007
C7		PD2	D2[A2/D2]	MTIOC4D	CRX0*1	IRQ2	AN010
C8		PD5	D5[A5/D5]	MTIC5W/ POE2#		IRQ5	AN013
C9		PE5	D13[A13/D13]	MTIOC4C/ MTIOC2B	RSPCKB/ ET_RX_CLK/ REF50CK	IRQ5	AN3
C10		PE4	D12[A12/D12]	MTIOC4D/ MTIOC1A/ PO28	SSLB0/ET_ERXD2		AN2
D1	XCIN						

Table 1.9 List of Pins and Pin Functions (100-Pin TFLGA) (4/5)

Pin No. 100-pin TFLGA	Power Supply Clock System Control	I/O Port	Bus EXDMAC	Timers (MTU, TPU, TMR, PPG, RTC, POE)	Communications (ETHERC, SCIc, SCId, RSPI, RIIC, CAN, IEB, USB)	Interrupt	S12AD AD DA
H4		P15		MTIOC0B/ MTCLKB/ TIOCB2/ TCLKB/TMCI2/ PO13	RXD1/SCK3/ SMISO1/SSCL1/ CRX1-DS	IRQ5	
H5		P55	WAIT#/ EDREQ0	MTIOC4D/ TMO3	CRX1/ET_EXOUT	IRQ10	
H6		P54	ALE/EDACK0	MTIOC4B/ TMCI1	CTS2#/RTS2#/ SS2#/CTX1/ ET_LINKSTA		
H7		PC7	A23/CS0#	MTIOC3A/ MTCLKB/ TMO2/PO31	TXD8/SMOSI8/ SSDA8/MISOA/ ET_COL	IRQ14	
H8		PC6	A22/CS1#	MTIOC3C/ MTCLKA/ TMCI2/PO30	RXD8/SMISO8/ SSCL8/MOSIA/ ET_ETXD3	IRQ13	
H9		PB6	A14	MTIOC3D/ TIOCA5/PO30	RXD9/SMISO9/ SSCL9/ET_ETXD1/ RMII_TXD1		
H10		PB7	A15	MTIOC3B/ TIOCB5/PO31	TXD9/SMOSI9/ SSDA9/ET_CRS/ RMII_CRS_DV		
J1		P24	CS4#/ EDREQ1	MTIOC4A/ MTCLKA/ TIOCB4/ TMRI1/PO4	SCK3/ USB0_VBUSEN		
J2		P21		MTIOC1B/ TIOCA3/ TMCI0/PO1	RXD0/SMISO0/ SSCL0/ USB0_EXICEN	IRQ9	
J3		P17		MTIOC3A/ MTIOC3B/ TIOCB0/ TCLKD/TMO1/ PO15/POE8#	SCK1/TXD3/ SMOSI3/SSDA3/ MISOA/SDA2-DS/ IETXD	IRQ7	ADTRG#
J4		P13		MTIOC0B/ TIOCA5/TMO3/ PO13	TXD2/SMOSI2/ SSDA2/SDA0[FM+]	IRQ3	ADTRG#
J5	VSS_USB						
J6	VCC_USB						
J7		P50	WR0#/WR#		TXD2/SMOSI2/ SSDA2/SSLB1		
J8		PC4	A20/CS3#	MTIOC3D/ MTCLKC/ TMCI1/PO25/ POE0#	SCK5/CTS8#/ RTS8#/SS8#/ SSLA0/ET_TX_CLK		
J9		PC0	A16	MTIOC3C/ TCLKC/PO17	CTS5#/RTS5#/ SS5#/SSLA1/ ET_ERXD3	IRQ14	
J10		PC1	A17	MTIOC3A/ TCLKD/PO18	SCK5/SSLA2/ ET_ERXD2	IRQ12	
K1		P23	EDACK0	MTIOC3D/ MTCLKD/ TIOCD3/PO3	TXD3/CTS0#/ RTS0#/SMOSI3/ SS0#/SSDA3/ USB0_DPUPE		

Table 4.1 List of I/O Registers (Address Order) (11/50)

Address	Module Symbol	Register Name	Register Symbol	Number of Bits	Access Size	Number of Access States		Related Function
						ICLK≥PCLK	ICLK<PCLK	
0008 71EEh	ICU	DTC activation enable register 238	DTCER238	8	8	2 ICLK		ICUb
0008 71EFh	ICU	DTC activation enable register 239	DTCER239	8	8	2 ICLK		
0008 71F1h	ICU	DTC activation enable register 241	DTCER241	8	8	2 ICLK		
0008 71F2h	ICU	DTC activation enable register 242	DTCER242	8	8	2 ICLK		
0008 71F4h	ICU	DTC activation enable register 244	DTCER244	8	8	2 ICLK		
0008 71F5h	ICU	DTC activation enable register 245	DTCER245	8	8	2 ICLK		
0008 71F7h	ICU	DTC activation enable register 247	DTCER247	8	8	2 ICLK		
0008 71F8h	ICU	DTC activation enable register 248	DTCER248	8	8	2 ICLK		
0008 71FAh	ICU	DTC activation enable register 250	DTCER250	8	8	2 ICLK		
0008 71FBh	ICU	DTC activation enable register 251	DTCER251	8	8	2 ICLK		
0008 7202h	ICU	Interrupt request enable register 02	IER02	8	8	2 ICLK		
0008 7203h	ICU	Interrupt request enable register 03	IER03	8	8	2 ICLK		
0008 7204h	ICU	Interrupt request enable register 04	IER04	8	8	2 ICLK		
0008 7205h	ICU	Interrupt request enable register 05	IER05	8	8	2 ICLK		
0008 7206h	ICU	Interrupt request enable register 06	IER06	8	8	2 ICLK		
0008 7207h	ICU	Interrupt request enable register 07	IER07	8	8	2 ICLK		
0008 7208h	ICU	Interrupt request enable register 08	IER08	8	8	2 ICLK		
0008 7209h	ICU	Interrupt request enable register 09	IER09	8	8	2 ICLK		
0008 720Bh	ICU	Interrupt request enable register 0B	IER0B	8	8	2 ICLK		
0008 720Ch	ICU	Interrupt request enable register 0C	IER0C	8	8	2 ICLK		
0008 720Dh	ICU	Interrupt request enable register 0D	IER0D	8	8	2 ICLK		
0008 720Eh	ICU	Interrupt request enable register 0E	IER0E	8	8	2 ICLK		
0008 720Fh	ICU	Interrupt request enable register 0F	IER0F	8	8	2 ICLK		
0008 7210h	ICU	Interrupt request enable register 10	IER10	8	8	2 ICLK		
0008 7211h	ICU	Interrupt request enable register 11	IER11	8	8	2 ICLK		
0008 7212h	ICU	Interrupt request enable register 12	IER12	8	8	2 ICLK		
0008 7213h	ICU	Interrupt request enable register 13	IER13	8	8	2 ICLK		
0008 7214h	ICU	Interrupt request enable register 14	IER14	8	8	2 ICLK		
0008 7215h	ICU	Interrupt request enable register 15	IER15	8	8	2 ICLK		
0008 7216h	ICU	Interrupt request enable register 16	IER16	8	8	2 ICLK		
0008 7217h	ICU	Interrupt request enable register 17	IER17	8	8	2 ICLK		
0008 7218h	ICU	Interrupt request enable register 18	IER18	8	8	2 ICLK		
0008 7219h	ICU	Interrupt request enable register 19	IER19	8	8	2 ICLK		
0008 721Ah	ICU	Interrupt request enable register 1A	IER1A	8	8	2 ICLK		
0008 721Bh	ICU	Interrupt request enable register 1B	IER1B	8	8	2 ICLK		
0008 721Ch	ICU	Interrupt request enable register 1C	IER1C	8	8	2 ICLK		
0008 721Dh	ICU	Interrupt request enable register 1D	IER1D	8	8	2 ICLK		
0008 721Eh	ICU	Interrupt request enable register 1E	IER1E	8	8	2 ICLK		
0008 721Fh	ICU	Interrupt request enable register 1F	IER1F	8	8	2 ICLK		
0008 72E0h	ICU	Software interrupt activation register	SWINTR	8	8	2 ICLK		
0008 72F0h	ICU	Fast interrupt set register	FIR	16	16	2 ICLK		
0008 7300h	ICU	Interrupt source priority register 000	IPR000	8	8	2 ICLK		
0008 7301h	ICU	Interrupt source priority register 001	IPR001	8	8	2 ICLK		
0008 7302h	ICU	Interrupt source priority register 002	IPR002	8	8	2 ICLK		
0008 7303h	ICU	Interrupt source priority register 003	IPR003	8	8	2 ICLK		
0008 7304h	ICU	Interrupt source priority register 004	IPR004	8	8	2 ICLK		
0008 7305h	ICU	Interrupt source priority register 005	IPR005	8	8	2 ICLK		
0008 7306h	ICU	Interrupt source priority register 006	IPR006	8	8	2 ICLK		
0008 7307h	ICU	Interrupt source priority register 007	IPR007	8	8	2 ICLK		
0008 7320h	ICU	Interrupt source priority register 032	IPR032	8	8	2 ICLK		
0008 7321h	ICU	Interrupt source priority register 033	IPR033	8	8	2 ICLK		

Table 4.1 List of I/O Registers (Address Order) (18/50)

Address	Module Symbol	Register Name	Register Symbol	Number of Bits	Access Size	Number of Access States		Related Function
						ICLK≥PCLK	ICLK<PCLK	
0008 8200h	TMR0	Timer control register	TCR	8	8	2, 3 PCLKB	2 ICLK	TMR
0008 8201h	TMR1	Timer control register	TCR	8	8	2, 3 PCLKB	2 ICLK	
0008 8202h	TMR0	Timer control/status register	TCSR	8	8	2, 3 PCLKB	2 ICLK	
0008 8203h	TMR1	Timer control/status register	TCSR	8	8	2, 3 PCLKB	2 ICLK	
0008 8204h	TMR0	Time constant register A	TCORA	8	8	2, 3 PCLKB	2 ICLK	
0008 8205h	TMR1	Time constant register A	TCORA	8	8*5	2, 3 PCLKB	2 ICLK	
0008 8206h	TMR0	Time constant register B	TCORB	8	8	2, 3 PCLKB	2 ICLK	
0008 8207h	TMR1	Time constant register B	TCORB	8	8*5	2, 3 PCLKB	2 ICLK	
0008 8208h	TMR0	Timer counter	TCNT	8	8	2, 3 PCLKB	2 ICLK	
0008 8209h	TMR1	Timer counter	TCNT	8	8*5	2, 3 PCLKB	2 ICLK	
0008 820Ah	TMR0	Timer counter control register	TCCR	8	8	2, 3 PCLKB	2 ICLK	
0008 820Bh	TMR1	Timer counter control register	TCCR	8	8*5	2, 3 PCLKB	2 ICLK	
0008 8210h	TMR2	Timer control register	TCR	8	8	2, 3 PCLKB	2 ICLK	
0008 8211h	TMR3	Timer control register	TCR	8	8	2, 3 PCLKB	2 ICLK	
0008 8212h	TMR2	Timer control/status register	TCSR	8	8	2, 3 PCLKB	2 ICLK	
0008 8213h	TMR3	Timer control/status register	TCSR	8	8	2, 3 PCLKB	2 ICLK	
0008 8214h	TMR2	Time constant register A	TCORA	8	8	2, 3 PCLKB	2 ICLK	
0008 8215h	TMR3	Time constant register A	TCORA	8	8*5	2, 3 PCLKB	2 ICLK	
0008 8216h	TMR2	Time constant register B	TCORB	8	8	2, 3 PCLKB	2 ICLK	
0008 8217h	TMR3	Time constant register B	TCORB	8	8	2, 3 PCLKB	2 ICLK	
0008 8218h	TMR2	Timer counter	TCNT	8	8	2, 3 PCLKB	2 ICLK	
0008 8219h	TMR3	Timer counter	TCNT	8	8*5	2, 3 PCLKB	2 ICLK	
0008 821Ah	TMR2	Timer counter control register	TCCR	8	8	2, 3 PCLKB	2 ICLK	
0008 821Bh	TMR3	Timer counter control register	TCCR	8	8*5	2, 3 PCLKB	2 ICLK	
0008 8280h	CRC	CRC control register	CRCCR	8	8	2, 3 PCLKB	2 ICLK	CRC
0008 8281h	CRC	CRC data input register	CRCDIR	8	8	2, 3 PCLKB	2 ICLK	
0008 8282h	CRC	CRC data output register	CRCDOR	16	16	2, 3 PCLKB	2 ICLK	
0008 8300h	RIIC0	I^2C bus control register 1	ICCR1	8	8	2, 3 PCLKB	2 ICLK	RIIC
0008 8301h	RIIC0	I^2C bus control register 2	ICCR2	8	8	2, 3 PCLKB	2 ICLK	
0008 8302h	RIIC0	I^2C bus mode register 1	ICMR1	8	8	2, 3 PCLKB	2 ICLK	
0008 8303h	RIIC0	I^2C bus mode register 2	ICMR2	8	8	2, 3 PCLKB	2 ICLK	
0008 8304h	RIIC0	I^2C bus mode register 3	ICMR3	8	8	2, 3 PCLKB	2 ICLK	
0008 8305h	RIIC0	I^2C bus function enable register	ICFER	8	8	2, 3 PCLKB	2 ICLK	
0008 8306h	RIIC0	I^2C bus status enable register	ICSER	8	8	2, 3 PCLKB	2 ICLK	
0008 8307h	RIIC0	I^2C bus interrupt enable register	ICIER	8	8	2, 3 PCLKB	2 ICLK	
0008 8308h	RIIC0	I^2C bus status register 1	ICSR1	8	8	2, 3 PCLKB	2 ICLK	
0008 8309h	RIIC0	I^2C bus status register 2	ICSR2	8	8	2, 3 PCLKB	2 ICLK	
0008 830Ah	RIIC0	Slave address register L0	SARL0	8	8	2, 3 PCLKB	2 ICLK	
0008 830Ah	RIIC0	Timeout Internal Counter L	TMOCNTL	8	8	2, 3 PCLKB	2 ICLK	
0008 830Bh	RIIC0	Slave address register U0	SARU0	8	8	2, 3 PCLKB	2 ICLK	
0008 830Bh	RIIC0	Timeout Internal Counter U	TMOCNTU	8	8	2, 3 PCLKB	2 ICLK	
0008 830Ch	RIIC0	Slave address register L1	SARL1	8	8	2, 3 PCLKB	2 ICLK	
0008 830Dh	RIIC0	Slave address register U1	SARU1	8	8	2, 3 PCLKB	2 ICLK	
0008 830Eh	RIIC0	Slave address register L2	SARL2	8	8	2, 3 PCLKB	2 ICLK	
0008 830Fh	RIIC0	Slave address register U2	SARU2	8	8	2, 3 PCLKB	2 ICLK	
0008 8310h	RIIC0	I^2C bus bit rate low-level register	ICBRL	8	8	2, 3 PCLKB	2 ICLK	
0008 8311h	RIIC0	I^2C bus bit rate high-level register	ICBRH	8	8	2, 3 PCLKB	2 ICLK	
0008 8312h	RIIC0	I^2C bus transmit data register	ICDRT	8	8	2, 3 PCLKB	2 ICLK	

Table 4.1 List of I/O Registers (Address Order) (30/50)

Address	Module Symbol	Register Name	Register Symbol	Number of Bits	Access Size	Number of Access States		Related Function
						ICLK≥PCLK	ICLK<PCLK	
0008 C046h	PORT6	Port input data register	PIDR	8	8	2, 3 PCLKB	2 ICLK	I/O Ports
0008 C047h	PORT7	Port input data register	PIDR	8	8	2, 3 PCLKB	2 ICLK	
0008 C048h	PORT8	Port input data register	PIDR	8	8	2, 3 PCLKB	2 ICLK	
0008 C049h	PORT9	Port input data register	PIDR	8	8	2, 3 PCLKB	2 ICLK	
0008 C04Ah	PORTA	Port input data register	PIDR	8	8	2, 3 PCLKB	2 ICLK	
0008 C04Bh	PORTB	Port input data register	PIDR	8	8	2, 3 PCLKB	2 ICLK	
0008 C04Ch	PORTC	Port input data register	PIDR	8	8	2, 3 PCLKB	2 ICLK	
0008 C04Dh	PORTD	Port input data register	PIDR	8	8	2, 3 PCLKB	2 ICLK	
0008 C04Eh	PORTE	Port input data register	PIDR	8	8	2, 3 PCLKB	2 ICLK	
0008 C04Fh	PORTF	Port input data register	PIDR	8	8	2, 3 PCLKB	2 ICLK	
0008 C050h	PORTG	Port input data register	PIDR	8	8	2, 3 PCLKB	2 ICLK	
0008 C052h	PORTJ	Port input data register	PIDR	8	8	2, 3 PCLKB	2 ICLK	
0008 C060h	PORT0	Port input data register	PMR	8	8	2, 3 PCLKB	2 ICLK	
0008 C061h	PORT1	Port input data register	PMR	8	8	2, 3 PCLKB	2 ICLK	
0008 C062h	PORT2	Port mode register	PMR	8	8	2, 3 PCLKB	2 ICLK	
0008 C063h	PORT3	Port mode register	PMR	8	8	2, 3 PCLKB	2 ICLK	
0008 C064h	PORT4	Port mode register	PMR	8	8	2, 3 PCLKB	2 ICLK	
0008 C065h	PORT5	Port mode register	PMR	8	8	2, 3 PCLKB	2 ICLK	
0008 C066h	PORT6	Port mode register	PMR	8	8	2, 3 PCLKB	2 ICLK	
0008 C067h	PORT7	Port mode register	PMR	8	8	2, 3 PCLKB	2 ICLK	
0008 C068h	PORT8	Port mode register	PMR	8	8	2, 3 PCLKB	2 ICLK	
0008 C069h	PORT9	Port mode register	PMR	8	8	2, 3 PCLKB	2 ICLK	
0008 C06Ah	PORTA	Port mode register	PMR	8	8	2, 3 PCLKB	2 ICLK	
0008 C06Bh	PORTB	Port mode register	PMR	8	8	2, 3 PCLKB	2 ICLK	
0008 C06Ch	PORTC	Port mode register	PMR	8	8	2, 3 PCLKB	2 ICLK	
0008 C06Dh	PORTD	Port mode register	PMR	8	8	2, 3 PCLKB	2 ICLK	
0008 C06Eh	PORTE	Port mode register	PMR	8	8	2, 3 PCLKB	2 ICLK	
0008 C06Fh	PORTF	Port mode register	PMR	8	8	2, 3 PCLKB	2 ICLK	
0008 C070h	PORTG	Port mode register	PMR	8	8	2, 3 PCLKB	2 ICLK	
0008 C072h	PORTJ	Port mode register	PMR	8	8	2, 3 PCLKB	2 ICLK	
0008 C080h	PORT0	Open drain control register 0	ODR0	8	8, 16	2, 3 PCLKB	2 ICLK	
0008 C081h	PORT0	Open drain control register 1	ODR1	8	8, 16	2, 3 PCLKB	2 ICLK	
0008 C082h	PORT1	Open drain control register 0	ODR0	8	8, 16	2, 3 PCLKB	2 ICLK	
0008 C083h	PORT1	Open drain control register 1	ODR1	8	8, 16	2, 3 PCLKB	2 ICLK	
0008 C084h	PORT2	Open drain control register 0	ODR0	8	8, 16	2, 3 PCLKB	2 ICLK	
0008 C085h	PORT2	Open drain control register 1	ODR1	8	8, 16	2, 3 PCLKB	2 ICLK	
0008 C086h	PORT3	Open drain control register 0	ODR0	8	8, 16	2, 3 PCLKB	2 ICLK	
0008 C087h	PORT3	Open drain control register 1	ODR1	8	8, 16	2, 3 PCLKB	2 ICLK	
0008 C088h	PORT4	Open drain control register 0	ODR0	8	8, 16	2, 3 PCLKB	2 ICLK	
0008 C089h	PORT4	Open drain control register 1	ODR1	8	8, 16	2, 3 PCLKB	2 ICLK	
0008 C08Ah	PORT5	Open drain control register 0	ODR0	8	8, 16	2, 3 PCLKB	2 ICLK	
0008 C08Bh	PORT5	Open drain control register 1	ODR1	8	8, 16	2, 3 PCLKB	2 ICLK	
0008 C08Ch	PORT6	Open drain control register 0	ODR0	8	8, 16	2, 3 PCLKB	2 ICLK	
0008 C08Dh	PORT6	Open drain control register 1	ODR1	8	8, 16	2, 3 PCLKB	2 ICLK	
0008 C08Eh	PORT7	Open drain control register 0	ODR0	8	8, 16	2, 3 PCLKB	2 ICLK	
0008 C08Fh	PORT7	Open drain control register 1	ODR1	8	8, 16	2, 3 PCLKB	2 ICLK	
0008 C090h	PORT8	Open drain control register 0	ODR0	8	8, 16	2, 3 PCLKB	2 ICLK	
0008 C091h	PORT8	Open drain control register 1	ODR1	8	8, 16	2, 3 PCLKB	2 ICLK	
0008 C092h	PORT9	Open drain control register 0	ODR0	8	8, 16	2, 3 PCLKB	2 ICLK	
0008 C093h	PORT9	Open drain control register 1	ODR1	8	8, 16	2, 3 PCLKB	2 ICLK	
0008 C094h	PORTA	Open drain control register 0	ODR0	8	8, 16	2, 3 PCLKB	2 ICLK	

Table 5.5 DC Characteristics (4) (for G Version (+85 < Ta ≤ +105°C))

Conditions: VCC = AVCC0 = VREFH = VCC_USB = V_{BATT} = 2.7 to 3.6 V, VREFH0 = 2.7 V to AVCC0, VSS = AVSS0 = VREFL/VREFL0 = VSS_USB = 0 V, $T_a = T_{opr}$

Item				Symbol	Min.	Typ.	Max.	Unit	Test Conditions
Supply current*1	High-speed operating mode	Max.*2		I_{CC}*3	—	—	115	mA	ICLK = 100 MHz PCLKA = 100MHz PCLKB = 50 MHz FCLK = 50 MHz BCLK = 100MHz
		Normal *4	Peripheral function: clock signal supplied*4		—	52	—		
			Peripheral function: clock signal stopped*4		—	40	—		
		Sleep mode			—	25	80		
		All-module-clock-stop mode (reference value)			—	20	53		
		Increased by BGO operation*5			—	15	—		
	Low-speed operating mode 1*6				—	4	—		ICLK = 1 MHz
	Low-speed operating mode 2				—	1	—		ICLK = 32.768 kHz
	Software standby mode				—	0.2	9		
	Deep software standby mode	Power supplied to RAM and USB resume detecting unit			—	22	200	μA	
		Power not supplied to RAM and USB resume detecting unit	Power-on reset circuit and low-power consumption function disabled		—	21	60		
			Power-on reset circuit and low-power consumption function enabled		—	6.2	28		
	Increase when the RTC is operating		When a crystal oscillator for low clock loads is in use		—	1.0	—		
			When a crystal oscillator for standard clock loads is in use		—	3.0	—		
	RTC operating while VCC is off (with the battery backup function, only the RTC and sub-clock oscillator operate)		When a crystal oscillator for low clock loads is in use		—	0.9	—		V_{BATT} = 2.0 V, VCC = 0V
					—	1.6	—		V_{BATT} = 3.3 V, VCC = 0V
			When a crystal oscillator for standard clock loads is in use		—	1.7	—		V_{BATT} = 2.0 V(for products with 100 pins or more), VBATT = 2.3 V (for the 64-pin product), VCC = 0V
					—	3.3	—		V_{BATT} = 3.3 V, VCC = 0V
Analog power supply current*7	During 12-bit A/D conversion (including temperature sensor)			I_{AVCC0}	—	2.3	3.2	mA	
	During 10-bit A/D conversion			I_{VREFH}*9	—	1.0	1.65	mA	
	During D/A conversion (per unit)				—	0.7	1.0	mA	
	Waiting for A/D, D/A conversion (all units)*10			—	—	25	35	μA	
	A/D, D/A converter in standby mode (all units)*10				—	0.1	5	μA	
Reference power supply current	During 12-bit A/D conversion			I_{VREFH0}	—	0.6	0.7	mA	
	Waiting for 12-bit A/D conversion (per unit)				—	0.5	0.6	mA	
	12-bit A/D converter in standby mode (per unit)				—	0.1	2.0	μA	
RAM standby voltage				V_{RAM}	2.7	—	—	V	
VCC rising gradient				SrVCC	8.4	—	20000	μs/V	
VCC falling gradient*8				SfVCC	8.4	—	—	μs/V	

Table 5.6 DC Characteristics (4)

Conditions: VCC = AVCC0 = VREFH = VCC_USB = 2.7 to 3.6 V, VREFH0 = 2.7 V to AVCC0,
VSS = AVSS0 = VREFL/VREFL0 = VSS_USB = 0 V, $T_a = T_{opr}$

Item	Symbol	Min.	Typ.	Max.	Unit	Test Conditions
Permissible total power consumption*1	P_d	—	—	380	mW	*2

Note 1. This is the total power consumption of the chip as a whole (including the power consumed by the output buffers).
Note 2. Contact a Renesas sales office or agent regarding further details of the conditions of measurement.

Table 5.7 Permissible Output Currents

Conditions: VCC = AVCC0 = VREFH = VCC_USB = 2.7 to 3.6 V, VREFH0 = 2.7 V to AVCC0,
VSS = AVSS0 = VREFL/VREFL0 = VSS_USB = 0 V, $T_a = T_{opr}$

Item			Symbol	Min.	Typ.	Max.	Unit
Permissible output low current (average value per pin)	All output pins*1	Normal drive	I_{OL}	—	—	2.0	mA
	All output pins*2	High drive	I_{OL}			3.8	mA
Permissible output low current (max. value per pin)	All output pins*1	Normal drive	I_{OL}	—	—	4.0	mA
	All output pins*2	High drive	I_{OL}			7.6	mA
Permissible output low current (total)	Total of all output pins		ΣI_{OL}	—	—	80	mA
Permissible output high current (average value per pin)	All output pins*1	Normal drive	I_{OH}	—	—	–2.0	mA
	USB_DPUPE pin*2	High drive	I_{OH}	—	—	–3.8	mA
Permissible output high current (max. value per pin)	All output pins*1	Normal drive	I_{OH}	—	—	–4.0	mA
	All output pins*2	High drive	I_{OH}	—	—	–7.6	mA
Permissible output high current (total)	Total of all output pins		ΣI_{OH}	—	—	–80	mA

Caution: To protect the LSI's reliability, the output current values should not exceed the values in this table.
Note 1. This is the value when normal driving ability is set with a pin for which normal driving ability is selectable.
Note 2. This is the value when high driving ability is set with a pin for which normal driving ability is selectable or the value of the pin to which high driving ability is fixed.

5.3.5 Bus Timing

Table 5.16 Bus Timing (packages with 177 to 144 pins)

Conditions: VCC = AVCC0 = VREFH = VCC_USB = 2.7 to 3.6 V, VREFH0 = 2.7 V to AVCC0,
VSS = AVSS0 = VREFL/VREFL0 = VSS_USB = 0 V,
ICLK = 8 to 100 MHz, BCLK pin = 8 to 50 MHz, SDCLK pin = 8 to 50MHz, $T_a = T_{opr}$
Output load conditions: V_{OH} = VCC × 0.5, V_{OL} = VCC × 0.5, I_{OH} = -1.0 mA, I_{OL} = 1.0 mA, C = 30 pF
High drive output is selected by the drive capacity control register.

Item	Symbol	Min.	Max.	Unit	Test Conditions
Address delay time	t_{AD}	—	15	ns	Figure 5.17 to Figure 5.22
Byte control delay time	t_{BCD}	—	15	ns	
CS# delay time	t_{CSD}	—	15	ns	
ALE delay time	t_{ALED}	—	20	ns	
RD# delay time	t_{RSD}	—	15	ns	
Read data setup time	t_{RDS}	15	—	ns	
Read data hold time	t_{RDH}	0	—	ns	
WR# delay time	t_{WRD}	—	15	ns	
Write data delay time	t_{WDD}	—	15	ns	
Write data hold time	t_{WDH}	0	—	ns	
WAIT# setup time	t_{WTS}	15	—	ns	Figure 5.23
WAIT# hold time	t_{WTH}	0	—	ns	
Address delay time 2 (SDRAM)	t_{AD2}	1	15	ns	Figure 5.24 to Figure 5.30
CS# delay time 2 (SDRAM)	t_{CSD2}	1	15	ns	
DQM delay time (SDRAM)	t_{DQMD}	1	15	ns	
CKE delay time (SDRAM)	t_{CKED}	1	15	ns	
Read data setup time 2 (SDRAM)	t_{RDS2}	12	—	ns	
Read data hold time 2 (SDRAM)	t_{RDH2}	0	—	ns	
Write data delay time 2 (SDRAM)	t_{WDD2}	—	15	ns	
Write data hold time 2 (SDRAM)	t_{WDH2}	1	—	ns	
WE# delay time (SDRAM)	t_{WED}	1	15	ns	
RAS# delay time (SDRAM)	t_{RASD}	1	15	ns	
CAS# delay time (SDRAM)	t_{CASD}	1	15	ns	

Table 5.29 12-Bit A/D Conversion Characteristics

Conditions: VCC = AVCC0 = VREFH = VCC_USB = 2.7 to 3.6 V, VREFH0 = 2.7 V to AVCC0
VSS = AVSS0 = VREFL/VREFL0 = VSS_USB = 0 V
PCLK = 8 to 50 MHz
$T_a = T_{opr}$

Item			Min.	Typ.	Max.	Unit	Test Conditions
Resolution			—	—	12	Bit	
Conversion time*1 (Operation at PCLK = 50 MHz)	AN0 to AN7	Permissible signal source impedance (max.) = 1.0 kΩ	1.0 (0.4)*2	—	—	μs	Sampling in 20 states
	Other channels	Permissible signal source impedance (max.) = 1.0 kΩ, AVCC ≥ 3.0 V	2.0 (1.4)*2	—	—	μs	Sampling in 70 states
		Permissible signal source impedance (max.) = 1.0 kΩ, AVCC ≥ 2.7 V	5.6 (5.0)*2	—	—	μs	Sampling in 250 states
Analog input capacitance			—	—	30	pF	
Offset error			—	±2.0	±7.5	LSB	
Full-scale error			—	±2.0	±7.5	LSB	
Quantization error			—	±0.5	—	LSB	
Absolute accuracy			—	±2.5	±8.0	LSB	
DNL differential nonlinearity error			—	±2.0	±4.0	LSB	
INL integral nonlinearity error			—	±2.0	±4.0	LSB	

Note: The above specification values apply when there is no access to the external bus during A/D conversion. If access proceeds during A/D conversion, values may not fall within the above ranges.
Note 1. The conversion time includes the sampling time and the comparison time. As the test conditions, the number of sampling states is indicated.
Note 2. The value in parentheses indicates the sampling time.

Table 5.30 A/D Internal Reference Voltage Characteristics

Conditions: VCC = AVCC0 = VREFH = VCC_USB = 2.7 to 3.6 V, VREFH0 = 2.7 V to AVCC0
VSS = AVSS0 = VREFL/VREFL0 = VSS_USB = 0 V
PCLK = 8 to 50 MHz
$T_a = T_{opr}$

Item	Min.	Typ.	Max.	Unit	Test Conditions
A/D Internal reference voltage	1.45	1.50	1.55	V	

5.11 ROM (Flash Memory for Code Storage) Characteristics

Table 5.36 ROM (Flash Memory for Code Storage) Characteristics (1)

Conditions: VCC = AVCC0 = VREFH = VCC_USB = 2.7 to 3.6V, VREFH0 = 2.7V to AVCC0
VSS = AVSS0 = VREFL/VREFL0 = VSS_USB = 0V
Temperature range for the programming/erasure operation: $T_a = T_{opr}$

Item	Symbol	min	typ	max	Unit	Condition
Reprogram/erasure cycle*1	N_{PEC}	1000	—	—	Times	
Data hold time	t_{DRP}	30*2	—	—	Year	Ta = +85°C

Note 1. Definition of reprogram/erase cycle:
The reprogram/erase cycle is the number of erasing for each block. When the reprogram/erase cycle is n times (n = 1000), erasing can be performed n times for each block. For instance, when 256-byte programming is performed 16 times for different addresses in 4-Kbyte block and then the entire block is erased, the reprogram/erase cycle is counted as one. However, programming the same address for several times as one erasing is not enabled (overwriting is prohibited).
Note 2. The result obtained from the reliability test.

Table 5.37 ROM (Flash Memory for Code Storage) Characteristics (2)

Conditions: VCC = AVCC0 = VREFH = VCC_USB = 2.7 to 3.6 V, VREFH0 = 2.7 V to AVCC0
VSS = AVSS0 = VREFL/VREFL0 = VSS_USB = 0 V
Temperature range for the programming/erasure operation: $T_a = T_{opr}$

Item		Symbol	FCLK = 4 MHz			20 MHz ≤ FCLK ≤ 50 MHz			Unit
			Min.	Typ.	Max.	Min.	Typ.	Max.	
Programming time $N_{PEC} \leq 100$ times	128 bytes	t_{P128}	—	2.8	28	—	1	10	ms
	4 Kbytes	t_{P4K}	—	63	140	—	23	50	ms
	16 Kbytes	t_{P16K}	—	252	560	—	90	200	ms
Programming time $N_{PEC} > 100$ times	128 bytes	t_{P128}	—	3.4	33.6	—	1.2	12	ms
	4 Kbytes	t_{P4K}	—	75.6	168	—	27.6	60	ms
	16 Kbytes	t_{P16K}	—	302.4	672	—	108	240	ms
Erasure time $N_{PEC} \leq 100$ times	4 Kbytes	t_{E4K}	—	50	120	—	25	60	ms
	16 Kbytes	t_{E16K}	—	200	480	—	100	240	ms
Erasure time $N_{PEC} > 100$ times	4 Kbytes	t_{E4K}	—	60	144	—	30	72	ms
	16 Kbytes	t_{E16K}	—	240	576	—	120	288	ms
Suspend delay time during programming		t_{SPD}	—	—	400	—	—	120	μs
First suspend delay time during erasure (in suspend priority mode)		t_{SESD1}	—	—	300	—	—	120	μs
Second suspend delay time during erasure (in suspend priority mode)		t_{SESD2}	—	—	1.7	—	—	1.7	ms
Suspend delay time during erasure (in erasure priority mode)		t_{SEED}	—	—	1.7	—	—	1.7	ms
FCU reset time		t_{FCUR}	35	—	—	35	—	—	μs

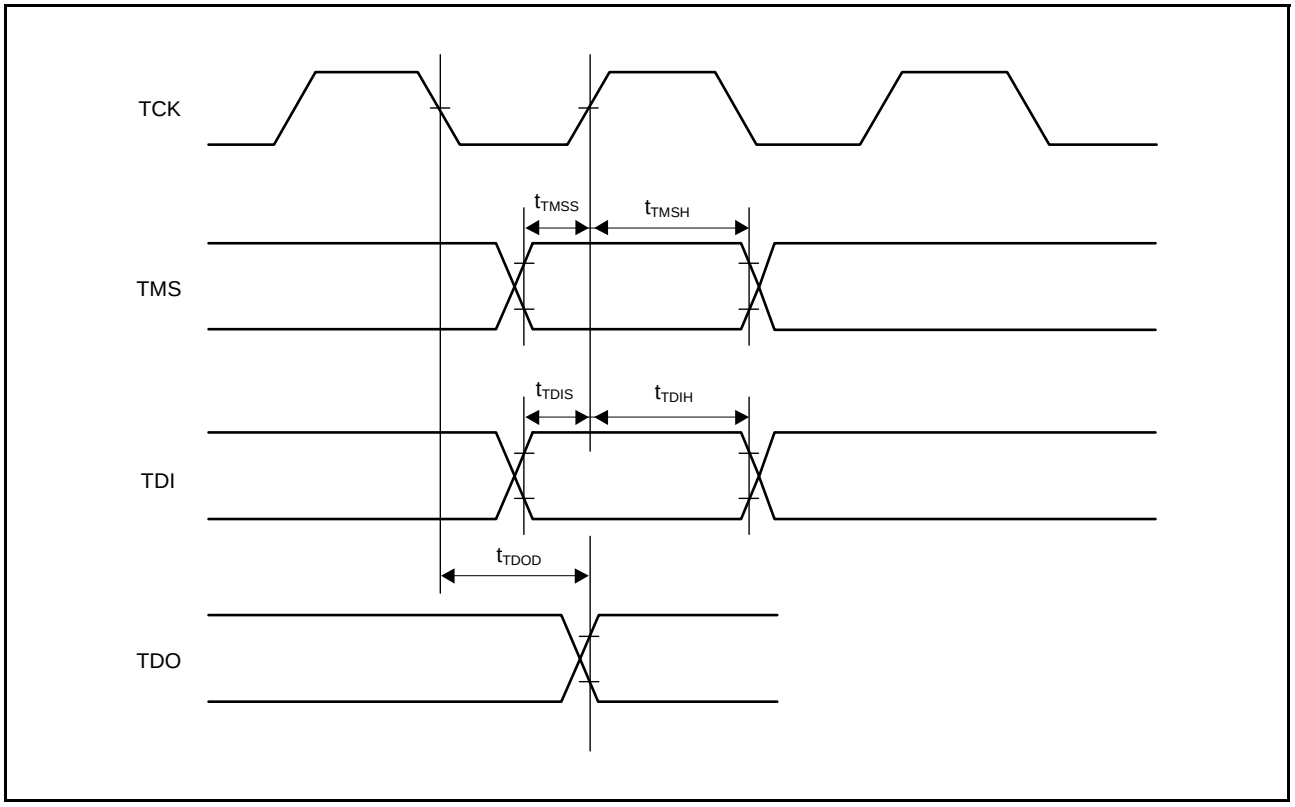

Figure 5.72 Boundary Scan Input/Output Timing

JEITA Package Code	RENESAS Code	Previous Code	MASS[Typ.]
P-TFLGA145-7x7-0.50	PTLG0145KA-A	145F0G	0.1g

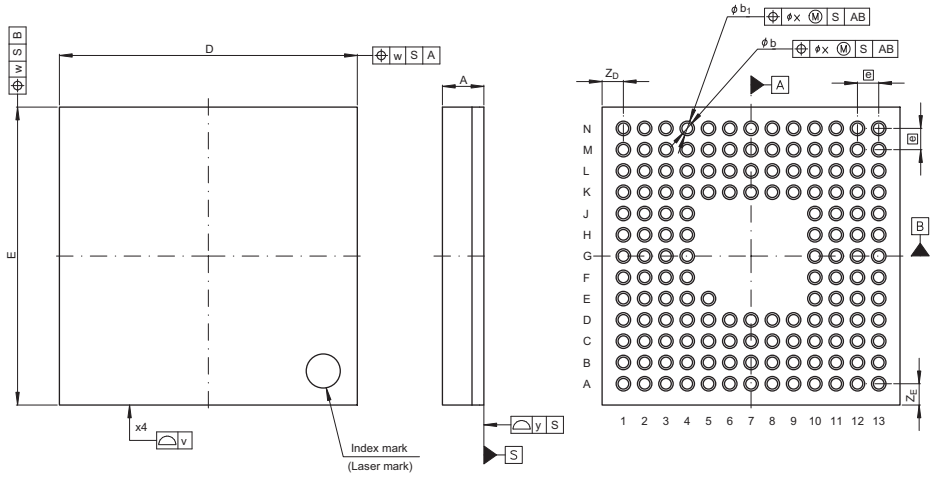

Reference Symbol	Dimension in Millimeters		
	Min	Nom	Max
D	—	7.0	—
E	—	7.0	—
v	—	—	0.15
w	—	—	0.20
A	—	—	1.05
e	—	0.5	—
b	0.21	0.25	0.29
b_1	0.29	0.34	0.39
x	—	—	0.08
y	—	—	0.10
Z_D	—	0.5	—
Z_E	—	0.5	—

Figure D 145-pin TFLGA (PTLG0145KA-A)

Rev.	Date	Description	
		Page	Summary
1.60	Mar 13. 2013	Feature	
		1	Changed
		1. Overview	
		2 to 7	Table 1.1 Outline of Specifications: changed, note added
		8	Table1.2 Comparison of Functions for Different Packages in the RX63N/RX631 Group, changed
		9 to 15	Table 1.3 List of Products, changed
		16	Figure 1.1 How to Read the Product Part No., changed
		17	Figure 1.2 Block Diagram, changed
		24 to 32	Figure 1.3 to Figure 1.11 Pin Assignment: note, added
		53 to 57	Table 1.9 List of Pins and Pin Functions (100-Pin TFLGA), added
		62 to 64	Table 1.11 List of Pins and Pin Functions (64-Pin LQFP), added
		65, 66	Table 1.12 List of Pins and Pin Functions (48-Pin LQFP), added
		3. Address Space	
		71	Figure 3.1 Memory Map in Each Operating Mode, changed
		4. I/O Registers	
		75 to 120	Table 4.1 List of I/O Registers (Address Order), changed
		5. Electrical Characteristics	
		All	Characteristics and timing conditions in the tables, changed
		124, 125	Table 5.4 DC Characteristics (3), changed
		126	Table 5.5 DC Characteristics (4), changed
		127	5.3 AC Characteristics, changed
		130, 131	Table 5.11, Clock Timing (Except for Sub-Clock Related): Condition and the table, changed, note, added
		132	Table 5.12 Clock Timing (Sub-Clock Related): Condition and the table, changed, note, added
		176	Table 5.33 Battery Backup Function Characteristics: Condition, changed
		Appendix 1.Package Dimensions	
		189	Figure H 64-pin LQFP (PLQP0064KB-A), added
		190	Figure I 48-pin LQFP (PLQP0048KB-A), added
1.70	Oct 08. 2013	Features	
		1	changed
		1. Overview	
		2 to 7	Table 1.1 Outline of Specifications, General I/O ports, Packages, changed, Parallel data capture unit (PDC), added.
		8	Table 1.2 Comparison of Functions for Different Packages in the RX63N/RX631 Group, 64-pin LQFP, changed, 64-pin TFLGA, Parallel data capture unit (PDC), added.
		9 to 16	Table 1.3 List of Products, changed.
		17	Figure 1.1 How to Read the Product Part No., changed
		18	Figure 1.2 Block Diagram, changed
		19 to 24	Table 1.4 Pin Functions,changed, Parallel data capture unit (PDC), added
		32	Figure 1.10 Pin Assignment (64-Pin TFLGA), added
		35 to 40	Table 1.5 List of Pin and Pin Functions (177-Pin TFLGA, 176-Pin LFBGA), changed
		41 to 45	Table 1.6 List of Pin and Pin Functions (176-Pin LQFP), changed
		46 to 50	Table 1.7 List of Pins and Pin Functions (145-Pin TFLGA), changed
		51 to 55	Table 1.8 List of Pins and Pin Functions (144-Pin LQFP), changed
		65 to 66	Table 1.11 List of Pins and Pin Functions (64-Pin TFLGA), added
		3. Address Space	
		76	Figure 3.1 Memory Map in Each Operating Mode, changed
		4. I/O Registers	
		79	(4) Restrictions in Relation to RMPA and String-Manipulation Instructions, added

General Precautions in the Handling of MPU/MCU Products

The following usage notes are applicable to all MPU/MCU products from Renesas. For detailed usage notes on the products covered by this document, refer to the relevant sections of the document as well as any technical updates that have been issued for the products.

1. Handling of Unused Pins

   Handle unused pins in accordance with the directions given under Handling of Unused Pins in the manual.

   — The input pins of CMOS products are generally in the high-impedance state. In operation with an unused pin in the open-circuit state, extra electromagnetic noise is induced in the vicinity of LSI, an associated shoot-through current flows internally, and malfunctions occur due to the false recognition of the pin state as an input signal become possible. Unused pins should be handled as described under Handling of Unused Pins in the manual.

2. Processing at Power-on

   The state of the product is undefined at the moment when power is supplied.

   — The states of internal circuits in the LSI are indeterminate and the states of register settings and pins are undefined at the moment when power is supplied.
   In a finished product where the reset signal is applied to the external reset pin, the states of pins are not guaranteed from the moment when power is supplied until the reset process is completed. In a similar way, the states of pins in a product that is reset by an on-chip power-on reset function are not guaranteed from the moment when power is supplied until the power reaches the level at which resetting has been specified.

3. Prohibition of Access to Reserved Addresses

   Access to reserved addresses is prohibited.

   — The reserved addresses are provided for the possible future expansion of functions. Do not access these addresses; the correct operation of LSI is not guaranteed if they are accessed.

4. Clock Signals

   After applying a reset, only release the reset line after the operating clock signal has become stable. When switching the clock signal during program execution, wait until the target clock signal has stabilized.

   — When the clock signal is generated with an external resonator (or from an external oscillator) during a reset, ensure that the reset line is only released after full stabilization of the clock signal. Moreover, when switching to a clock signal produced with an external resonator (or by an external oscillator) while program execution is in progress, wait until the target clock signal is stable.

5. Differences between Products

   Before changing from one product to another, i.e. to a product with a different part number, confirm that the change will not lead to problems.

   — The characteristics of an MPU or MCU in the same group but having a different part number may differ in terms of the internal memory capacity, layout pattern, and other factors, which can affect the ranges of electrical characteristics, such as characteristic values, operating margins, immunity to noise, and amount of radiated noise. When changing to a product with a different part number, implement a system-evaluation test for the given product.