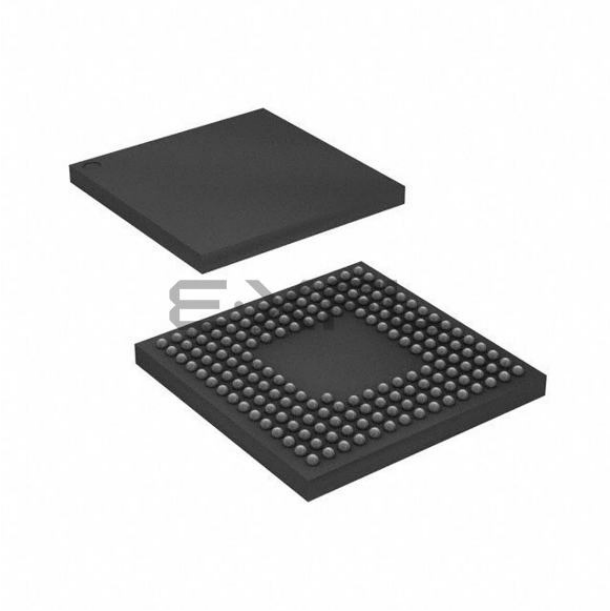

Welcome to E-XFL.COM

What is "Embedded - Microcontrollers"?

"Embedded - Microcontrollers" refer to small, integrated circuits designed to perform specific tasks within larger systems. These microcontrollers are essentially compact computers on a single chip, containing a processor core, memory, and programmable input/output peripherals. They are called "embedded" because they are embedded within electronic devices to control various functions, rather than serving as standalone computers. Microcontrollers are crucial in modern electronics, providing the intelligence and control needed for a wide range of applications.

Applications of "Embedded - Microcontrollers"

Details	
Product Status	Not For New Designs
Core Processor	RX
Core Size	32-Bit Single-Core
Speed	100MHz
Connectivity	CANbus, EBI/EMI, Ethernet, I²C, LINbus, SCI, SPI, USB
Peripherals	DMA, LVD, POR, PWM, WDT
Number of I/O	133
Program Memory Size	2MB (2M x 8)
Program Memory Type	FLASH
EEPROM Size	32K x 8
RAM Size	128K x 8
Voltage - Supply (Vcc/Vdd)	2.7V ~ 3.6V
Data Converters	A/D 8x10b, 14x12b; D/A 1x10b
Oscillator Type	Internal
Operating Temperature	-40°C ~ 85°C (TA)
Mounting Type	Surface Mount
Package / Case	177-TFLGA
Supplier Device Package	177-TFLGA (8x8)
Purchase URL	https://www.e-xfl.com/product-detail/renesas-electronics-america/r5f563neddlc-u0

	A	B	C	D	E	F	G	H	J	K	L	M	N	
13	PE3	PE4	VSS	PE6	P67	PA2	PA4	PA7	PB1	PB5	VSS	VCC	P74	13
12	PE1	PE2	P70	PE5	P65	PA1	VCC	PB0	PB2	PB6	P73	PC1	P75	12
11	P62	P61	PE0	VCC	P66	VSS	PA6	P71	PB4	PB7	PC2	PC0	PC3	11
10	VSS	VCC	P63	PE7	PA0	PA3	PA5	P72	PB3	P76	PC4	P77	P82	10
9	PD6	PD4	PD7	P64						P80	PC5	P81	PC7	9
8	PD2	PD0	PD3	P60						VCC	P83	PC6	VSS	8
7	P92	P91	PD1	PD5						P51	P52	P50	P55	7
6	P90	P47	VSS	P93						P53	P56	VSS_ USB	USB0_ DP	6
5	P45	P43	P46	VCC	P44					P54	P13	VCC_ USB	USB0_ DM	5
4	P42	VREFL0	P41	P01	EMLE	VBATT	BSCANP	P35	P30	P15	P24	P12	P14	4
3	P40	P05	VREFH0	P03	PJ5	PJ3	MD/ FINED	VSS	P32	P31	P16	P86	P87	3
2	P07	AVCC0	P02	PF5	VCL	XCOUT	RES#	VCC	P33	P26	P23	P17	P20	2
1	AVSS0	VREFH	VREFL	P00	VSS	XCIN	XTAL	EXTAL	P34	P27	P25	P22	P21	1
	A	B	C	D	E	F	G	H	J	K	L	M	N	

RX63N Group
RX631 Group
PTLG0145KA-A
(145-pin TFLGA)
(Top perspective view)

Note: This figure indicates the power supply pins and I/O port pins. For the pin configuration, see Table 1.7, List of Pins and Pin Functions (145-Pin TFLGA).

Figure 1.6 Pin Assignment (145-Pin TFLGA)

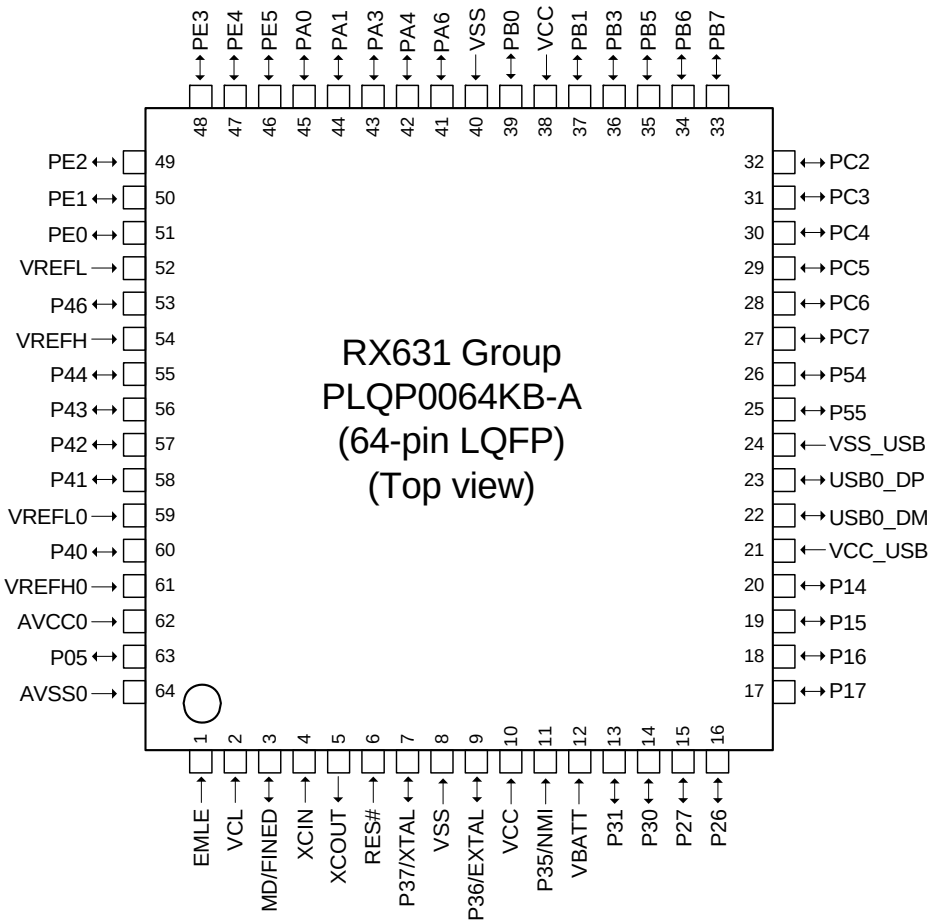

Note: This figure indicates the power supply pins and I/O port pins. For the pin configuration, see Table 1.12, List of Pins and Pin Functions (64-Pin LQFP).

Figure 1.11 Pin Assignment (64-Pin LQFP)

Note 3. Enabled only for the ROM capacity: 2 Mbytes/1.5 Mbytes

Table 1.7 List of Pins and Pin Functions (145-Pin TFLGA) (4/5)

Pin No. 145-pin TFLGA	Power Supply Clock System Control	I/O Port	Bus EXDMAC SDRAMC	Timers (MTU, TPU, TMR, PPG, RTC, POE)	Communications (ETHERC, SCIc, SCId, RSPI, RIIC, CAN, IEB, USB, and PDC)	Interrupt	S12AD AD DA
L3		P16		MTIOC3C/MTIOC3D/ TIOCB1/TCLKC/TMO2/ PO14/RTCOUT	TXD1/RXD3/SMOSI1/ SMISO3/SSDA1/SSCL3/ MOSIA/SCL2-DS/IERXD/ USB0_VBUS/ USB0_VBUSEN/ USB0_OVRCURB	IRQ6	ADTRG0#
L4		P24	CS4#/EDREQ1	MTIOC4A/MTCLKA/ TIOCB4/TMRI1/PO4	SCK3/USB0_VBUSEN/ PIXCLK		
L5		P13		MTIOC0B/TIOCA5/ TMO3/PO13	TXD2/SMOSI2/SSDA2/ SDA0[FM+]	IRQ3	ADTRG#
L6		P56	EDACK1	MTIOC3C/TIOCA1			
L7		P52	RD#		RXD2/SMISO2/SSCL2/ SSLB3		
L8	TRCLK	P83	EDACK1	MTIOC4C	CTS10#/RTS10#/SS10#/ ET_CRS/RMII_CRS_DV		
L9		PC5	A21/CS2#/ WAIT#	MTIOC3B/MTCLKD/ TIOCD6/TCLKF/TMRI2/ PO29	SCK8/RSPCKA/ ET_ETXD2		
L10		PC4	A20/CS3#	MTIOC3D/MTCLKC/ TIOCC6/TCLKE/TMCI1/ PO25/POE0#	SCK5/CTS8#/RTS8#/ SS8#/SSLA0/ET_TX_CLK		
L11		PC2	A18	MTIOC4B/TCLKA/PO21	RXD5/SMISO5/SSCL5/ SSLA3/IERXD/ET_RX_DV		
L12		P73	CS3#	PO16	ET_WOL		
L13	VSS						
M1		P22	EDREQ0	MTIOC3B/MTCLKC/ TIOCC3/TMO0/PO2	SCK0/USB0_DRPD/PIXD6		
M2		P17		MTIOC3A/MTIOC3B/ TIOCB0/TCLKD/TMO1/ PO15/POE8#	SCK1/TXD3/SMOSI3/ SSDA3/MISOA/SDA2-DS/ IETXD/PIXD3	IRQ7	ADTRG#
M3		P86		TIOCA0	PIXD1		
M4		P12		TMCI1	RXD2/SMISO2/SSCL2/ SCL0[FM+]	IRQ2	
M5	VCC_USB						
M6	VSS_USB						
M7		P50	WR0#/WR#		TXD2/SMOSI2/SSDA2/ SSLB1		
M8		PC6	A22/CS1#	MTIOC3C/MTCLKA/ TIOCA6/TMCI2/PO30	RXD8/SMISO8/SSCL8/ MOSIA/ET_ETXD3	IRQ13	
M9	TRDATA1	P81	EDACK0	MTIOC3D/PO27	RXD10/SMISO10/SSCL10/ ET_ETXD0/RMII_TXD0		
M10		P77	CS7#	PO23	TXD11/SMOSI11/SSDA11/ ET_RX_ER/RMII_RX_ER		
M11		PC0	A16	MTIOC3C/TCLKC/PO17	CTS5#/RTS5#/SS5#/ SSLA1/SCL3/ET_ERXD3	IRQ14	
M12		PC1	A17	MTIOC3A/TCLKD/PO18	SCK5/SSLA2/SDA3/ ET_ERXD2	IRQ12	
M13	VCC						
N1		P21		MTIOC1B/TIOCA3/ TMCI0/PO1	RXD0/SMISO0/SSCL0/ SCL1/USB0_EXICEN/ PIXD5	IRQ9	
N2		P20		MTIOC1A/TIOCB3/ TMRI0/PO0	TXD0/SMOSI0/SSDA0/ SDA1/USB0_ID/PIXD4	IRQ8	
N3		P87		TIOCA2	PIXD2		
N4		P14		MTIOC3A/MTCLKA/ TIOCB5/TCLKA/TMRI2/ PO15	CTS1#/RTS1#/SS1#/ CTX1/USB0_DPUPE/ USB0_OVRCURA	IRQ4	
N5					USB0_DM		
N6					USB0_DP		

Table 1.8 List of Pins and Pin Functions (144-Pin LQFP) (5/5)

Pin No. 144-pin LQFP	Power Supply Clock System Control	I/O Port	Bus EXDMAC SDRAMC	Timers (MTU, TPU, TMR, PPG, RTC, POE)	Communications (ETHERC, SCIc, SCId, RSPI, RIIC, CAN, IEB, USB, and PDC)	Interrupt	S12AD AD DA
125		PD1	D1[A1/D1]	MTIOC4B/TIOCB7/ TCLKG	MOSIC/CTX0	IRQ1	AN009
126		PD0	D0[A0/D0]	TIOCA7		IRQ0	AN008
127		P93	A19		CTS7#/RTS7#/SS7#		AN017
128		P92	A18		RXD7/SMISO7/SSCL7		AN016
129		P91	A17		SCK7		AN015
130	VSS						
131		P90	A16		TXD7/SMOSI7/SSDA7		AN014
132	VCC						
133		P47				IRQ15-DS	AN007
134		P46				IRQ14-DS	AN006
135		P45				IRQ13-DS	AN005
136		P44				IRQ12-DS	AN004
137		P43				IRQ11-DS	AN003
138		P42				IRQ10-DS	AN002
139		P41				IRQ9-DS	AN001
140	VREFL0						
141		P40				IRQ8-DS	AN000
142	VREFH0						
143	AVCC0						
144		P07				IRQ15	ADTRG0#

Note 1. The BCLK function is multiplexed with the I/O port function for pin P53, so the port function is not available if the external bus is enabled.

Note 2. Enabled only for the ROM capacity: 2 Mbytes/1.5 Mbytes

Table 4.1 List of I/O Registers (Address Order) (7/50)

Address	Module Symbol	Register Name	Register Symbol	Number of Bits	Access Size	Number of Access States		Related Function
						ICLK≥PCLK	ICLK<PCLK	
0008 7096h	ICU	Interrupt request register 150	IR150	8	8	2 ICLK		ICUb
0008 7097h	ICU	Interrupt request register 151	IR151	8	8	2 ICLK		
0008 7098h	ICU	Interrupt request register 152	IR152	8	8	2 ICLK		
0008 7099h	ICU	Interrupt request register 153	IR153	8	8	2 ICLK		
0008 709Ah	ICU	Interrupt request register 154	IR154	8	8	2 ICLK		
0008 709Bh	ICU	Interrupt request register 155	IR155	8	8	2 ICLK		
0008 709Ch	ICU	Interrupt request register 156	IR156	8	8	2 ICLK		
0008 709Dh	ICU	Interrupt request register 157	IR157	8	8	2 ICLK		
0008 709Eh	ICU	Interrupt request register 158	IR158	8	8	2 ICLK		
0008 709Fh	ICU	Interrupt request register 159	IR159	8	8	2 ICLK		
0008 70A0h	ICU	Interrupt request register 160	IR160	8	8	2 ICLK		
0008 70A1h	ICU	Interrupt request register 161	IR161	8	8	2 ICLK		
0008 70A2h	ICU	Interrupt request register 162	IR162	8	8	2 ICLK		
0008 70A3h	ICU	Interrupt request register 163	IR163	8	8	2 ICLK		
0008 70A4h	ICU	Interrupt request register 164	IR164	8	8	2 ICLK		
0008 70A5h	ICU	Interrupt request register 165	IR165	8	8	2 ICLK		
0008 70A6h	ICU	Interrupt request register 166	IR166	8	8	2 ICLK		
0008 70A7h	ICU	Interrupt request register 167	IR167	8	8	2 ICLK		
0008 70AAh	ICU	Interrupt request register 170	IR170	8	8	2 ICLK		
0008 70ABh	ICU	Interrupt request register 171	IR171	8	8	2 ICLK		
0008 70ACh	ICU	Interrupt request register 172	IR172	8	8	2 ICLK		
0008 70ADh	ICU	Interrupt request register 173	IR173	8	8	2 ICLK		
0008 70AEh	ICU	Interrupt request register 174	IR174	8	8	2 ICLK		
0008 70AFh	ICU	Interrupt request register 175	IR175	8	8	2 ICLK		
0008 70B0h	ICU	Interrupt request register 176	IR176	8	8	2 ICLK		
0008 70B1h	ICU	Interrupt request register 177	IR177	8	8	2 ICLK		
0008 70B2h	ICU	Interrupt request register 178	IR178	8	8	2 ICLK		
0008 70B3h	ICU	Interrupt request register 179	IR179	8	8	2 ICLK		
0008 70B4h	ICU	Interrupt request register 180	IR180	8	8	2 ICLK		
0008 70B5h	ICU	Interrupt request register 181	IR181	8	8	2 ICLK		
0008 70B6h	ICU	Interrupt request register 182	IR182	8	8	2 ICLK		
0008 70B7h	ICU	Interrupt request register 183	IR183	8	8	2 ICLK		
0008 70B8h	ICU	Interrupt request register 184	IR184	8	8	2 ICLK		
0008 70B9h	ICU	Interrupt request register 185	IR185	8	8	2 ICLK		
0008 70BAh	ICU	Interrupt request register 186	IR186	8	8	2 ICLK		
0008 70BBh	ICU	Interrupt request register 187	IR187	8	8	2 ICLK		
0008 70BCh	ICU	Interrupt request register 188	IR188	8	8	2 ICLK		
0008 70BDh	ICU	Interrupt request register 189	IR189	8	8	2 ICLK		
0008 70BEh	ICU	Interrupt request register 190	IR190	8	8	2 ICLK		
0008 70BFh	ICU	Interrupt request register 191	IR191	8	8	2 ICLK		
0008 70C0h	ICU	Interrupt request register 192	IR192	8	8	2 ICLK		
0008 70C1h	ICU	Interrupt request register 193	IR193	8	8	2 ICLK		
0008 70C2h	ICU	Interrupt request register 194	IR194	8	8	2 ICLK		
0008 70C3h	ICU	Interrupt request register 195	IR195	8	8	2 ICLK		
0008 70C4h	ICU	Interrupt request register 196	IR196	8	8	2 ICLK		
0008 70C5h	ICU	Interrupt request register 197	IR197	8	8	2 ICLK		
0008 70C6h	ICU	Interrupt request register 198	IR198	8	8	2 ICLK		
0008 70C7h	ICU	Interrupt request register 199	IR199	8	8	2 ICLK		
0008 70C8h	ICU	Interrupt request register 200	IR200	8	8	2 ICLK		
0008 70C9h	ICU	Interrupt request register 201	IR201	8	8	2 ICLK		
0008 70CAh	ICU	Interrupt request register 202	IR202	8	8	2 ICLK		

Table 4.1 List of I/O Registers (Address Order) (11/50)

Address	Module Symbol	Register Name	Register Symbol	Number of Bits	Access Size	Number of Access States		Related Function
						ICLK≥PCLK	ICLK<PCLK	
0008 71EEh	ICU	DTC activation enable register 238	DTCER238	8	8	2 ICLK		ICUb
0008 71EFh	ICU	DTC activation enable register 239	DTCER239	8	8	2 ICLK		
0008 71F1h	ICU	DTC activation enable register 241	DTCER241	8	8	2 ICLK		
0008 71F2h	ICU	DTC activation enable register 242	DTCER242	8	8	2 ICLK		
0008 71F4h	ICU	DTC activation enable register 244	DTCER244	8	8	2 ICLK		
0008 71F5h	ICU	DTC activation enable register 245	DTCER245	8	8	2 ICLK		
0008 71F7h	ICU	DTC activation enable register 247	DTCER247	8	8	2 ICLK		
0008 71F8h	ICU	DTC activation enable register 248	DTCER248	8	8	2 ICLK		
0008 71FAh	ICU	DTC activation enable register 250	DTCER250	8	8	2 ICLK		
0008 71FBh	ICU	DTC activation enable register 251	DTCER251	8	8	2 ICLK		
0008 7202h	ICU	Interrupt request enable register 02	IER02	8	8	2 ICLK		
0008 7203h	ICU	Interrupt request enable register 03	IER03	8	8	2 ICLK		
0008 7204h	ICU	Interrupt request enable register 04	IER04	8	8	2 ICLK		
0008 7205h	ICU	Interrupt request enable register 05	IER05	8	8	2 ICLK		
0008 7206h	ICU	Interrupt request enable register 06	IER06	8	8	2 ICLK		
0008 7207h	ICU	Interrupt request enable register 07	IER07	8	8	2 ICLK		
0008 7208h	ICU	Interrupt request enable register 08	IER08	8	8	2 ICLK		
0008 7209h	ICU	Interrupt request enable register 09	IER09	8	8	2 ICLK		
0008 720Bh	ICU	Interrupt request enable register 0B	IER0B	8	8	2 ICLK		
0008 720Ch	ICU	Interrupt request enable register 0C	IER0C	8	8	2 ICLK		
0008 720Dh	ICU	Interrupt request enable register 0D	IER0D	8	8	2 ICLK		
0008 720Eh	ICU	Interrupt request enable register 0E	IER0E	8	8	2 ICLK		
0008 720Fh	ICU	Interrupt request enable register 0F	IER0F	8	8	2 ICLK		
0008 7210h	ICU	Interrupt request enable register 10	IER10	8	8	2 ICLK		
0008 7211h	ICU	Interrupt request enable register 11	IER11	8	8	2 ICLK		
0008 7212h	ICU	Interrupt request enable register 12	IER12	8	8	2 ICLK		
0008 7213h	ICU	Interrupt request enable register 13	IER13	8	8	2 ICLK		
0008 7214h	ICU	Interrupt request enable register 14	IER14	8	8	2 ICLK		
0008 7215h	ICU	Interrupt request enable register 15	IER15	8	8	2 ICLK		
0008 7216h	ICU	Interrupt request enable register 16	IER16	8	8	2 ICLK		
0008 7217h	ICU	Interrupt request enable register 17	IER17	8	8	2 ICLK		
0008 7218h	ICU	Interrupt request enable register 18	IER18	8	8	2 ICLK		
0008 7219h	ICU	Interrupt request enable register 19	IER19	8	8	2 ICLK		
0008 721Ah	ICU	Interrupt request enable register 1A	IER1A	8	8	2 ICLK		
0008 721Bh	ICU	Interrupt request enable register 1B	IER1B	8	8	2 ICLK		
0008 721Ch	ICU	Interrupt request enable register 1C	IER1C	8	8	2 ICLK		
0008 721Dh	ICU	Interrupt request enable register 1D	IER1D	8	8	2 ICLK		
0008 721Eh	ICU	Interrupt request enable register 1E	IER1E	8	8	2 ICLK		
0008 721Fh	ICU	Interrupt request enable register 1F	IER1F	8	8	2 ICLK		
0008 72E0h	ICU	Software interrupt activation register	SWINTR	8	8	2 ICLK		
0008 72F0h	ICU	Fast interrupt set register	FIR	16	16	2 ICLK		
0008 7300h	ICU	Interrupt source priority register 000	IPR000	8	8	2 ICLK		
0008 7301h	ICU	Interrupt source priority register 001	IPR001	8	8	2 ICLK		
0008 7302h	ICU	Interrupt source priority register 002	IPR002	8	8	2 ICLK		
0008 7303h	ICU	Interrupt source priority register 003	IPR003	8	8	2 ICLK		
0008 7304h	ICU	Interrupt source priority register 004	IPR004	8	8	2 ICLK		
0008 7305h	ICU	Interrupt source priority register 005	IPR005	8	8	2 ICLK		
0008 7306h	ICU	Interrupt source priority register 006	IPR006	8	8	2 ICLK		
0008 7307h	ICU	Interrupt source priority register 007	IPR007	8	8	2 ICLK		
0008 7320h	ICU	Interrupt source priority register 032	IPR032	8	8	2 ICLK		
0008 7321h	ICU	Interrupt source priority register 033	IPR033	8	8	2 ICLK		

Table 4.1 List of I/O Registers (Address Order) (12/50)

Address	Module Symbol	Register Name	Register Symbol	Number of Bits	Access Size	Number of Access States		Related Function
						ICLK≥PCLK	ICLK<PCLK	
0008 7322h	ICU	Interrupt source priority register 034	IPR034	8	8	2 ICLK		ICUb
0008 7323h	ICU	Interrupt source priority register 035	IPR035	8	8	2 ICLK		
0008 7324h	ICU	Interrupt source priority register 036	IPR036	8	8	2 ICLK		
0008 7325h	ICU	Interrupt source priority register 037	IPR037	8	8	2 ICLK		
0008 7326h	ICU	Interrupt source priority register 038	IPR038	8	8	2 ICLK		
0008 7327h	ICU	Interrupt source priority register 039	IPR039	8	8	2 ICLK		
0008 732Ah	ICU	Interrupt source priority register 042	IPR042	8	8	2 ICLK		
0008 732Dh	ICU	Interrupt source priority register 045	IPR045	8	8	2 ICLK		
0008 7330h	ICU	Interrupt source priority register 048	IPR048	8	8	2 ICLK		
0008 7334h	ICU	Interrupt source priority register 052	IPR052	8	8	2 ICLK		
0008 7338h	ICU	Interrupt source priority register 056	IPR056	8	8	2 ICLK		
0008 733Eh	ICU	Interrupt source priority register 062	IPR062	8	8	2 ICLK		
0008 7340h	ICU	Interrupt source priority register 064	IPR064	8	8	2 ICLK		
0008 7341h	ICU	Interrupt source priority register 065	IPR065	8	8	2 ICLK		
0008 7342h	ICU	Interrupt source priority register 066	IPR066	8	8	2 ICLK		
0008 7343h	ICU	Interrupt source priority register 067	IPR067	8	8	2 ICLK		
0008 7344h	ICU	Interrupt source priority register 068	IPR068	8	8	2 ICLK		
0008 7345h	ICU	Interrupt source priority register 069	IPR069	8	8	2 ICLK		
0008 7346h	ICU	Interrupt source priority register 070	IPR070	8	8	2 ICLK		
0008 7347h	ICU	Interrupt source priority register 071	IPR071	8	8	2 ICLK		
0008 7348h	ICU	Interrupt source priority register 072	IPR072	8	8	2 ICLK		
0008 7349h	ICU	Interrupt source priority register 073	IPR073	8	8	2 ICLK		
0008 734Ah	ICU	Interrupt source priority register 074	IPR074	8	8	2 ICLK		
0008 734Bh	ICU	Interrupt source priority register 075	IPR075	8	8	2 ICLK		
0008 734Ch	ICU	Interrupt source priority register 076	IPR076	8	8	2 ICLK		
0008 734Dh	ICU	Interrupt source priority register 077	IPR077	8	8	2 ICLK		
0008 734Eh	ICU	Interrupt source priority register 078	IPR078	8	8	2 ICLK		
0008 734Fh	ICU	Interrupt source priority register 079	IPR079	8	8	2 ICLK		
0008 735Ah	ICU	Interrupt source priority register 090	IPR090	8	8	2 ICLK		
0008 735Bh	ICU	Interrupt source priority register 091	IPR091	8	8	2 ICLK		
0008 735Ch	ICU	Interrupt source priority register 092	IPR092	8	8	2 ICLK		
0008 735Dh	ICU	Interrupt source priority register 093	IPR093	8	8	2 ICLK		
0008 7362h	ICU	Interrupt source priority register 098	IPR098	8	8	2 ICLK		
0008 7366h	ICU	Interrupt source priority register 102	IPR102	8	8	2 ICLK		
0008 736Ah	ICU	Interrupt source priority register 106	IPR106	8	8	2 ICLK		
0008 736Bh	ICU	Interrupt source priority register 107	IPR107	8	8	2 ICLK		
0008 736Ch	ICU	Interrupt source priority register 108	IPR108	8	8	2 ICLK		
0008 736Dh	ICU	Interrupt source priority register 109	IPR109	8	8	2 ICLK		
0008 736Eh	ICU	Interrupt source priority register 110	IPR110	8	8	2 ICLK		
0008 736Fh	ICU	Interrupt source priority register 111	IPR111	8	8	2 ICLK		
0008 7370h	ICU	Interrupt source priority register 112	IPR112	8	8	2 ICLK		
0008 7372h	ICU	Interrupt source priority register 114	IPR114	8	8	2 ICLK		
0008 737Ah	ICU	Interrupt source priority register 122	IPR122	8	8	2 ICLK		
0008 737Eh	ICU	Interrupt source priority register 126	IPR126	8	8	2 ICLK		
0008 7382h	ICU	Interrupt source priority register 130	IPR130	8	8	2 ICLK		
0008 7384h	ICU	Interrupt source priority register 132	IPR132	8	8	2 ICLK		
0008 7386h	ICU	Interrupt source priority register 134	IPR134	8	8	2 ICLK		
0008 738Ah	ICU	Interrupt source priority register 138	IPR138	8	8	2 ICLK		
0008 738Ch	ICU	Interrupt source priority register 140	IPR140	8	8	2 ICLK		
0008 738Eh	ICU	Interrupt source priority register 142	IPR142	8	8	2 ICLK		
0008 7392h	ICU	Interrupt source priority register 146	IPR146	8	8	2 ICLK		

Table 4.1 List of I/O Registers (Address Order) (16/50)

Address	Module Symbol	Register Name	Register Symbol	Number of Bits	Access Size	Number of Access States		Related Function
						ICLK≥PCLK	ICLK<PCLK	
0008 814Ch	TPU3	Timer general register C	TGRC	16	16	2, 3 PCLKB	2 ICLK	TPUa
0008 814Eh	TPU3	Timer general register D	TGRD	16	16	2, 3 PCLKB	2 ICLK	
0008 8150h	TPU4	Timer control register	TCR	8	8	2, 3 PCLKB	2 ICLK	
0008 8151h	TPU4	Timer mode register	TMDR	8	8	2, 3 PCLKB	2 ICLK	
0008 8152h	TPU4	Timer I/O control register	TIOR	8	8	2, 3 PCLKB	2 ICLK	
0008 8154h	TPU4	Timer interrupt enable register	TIER	8	8	2, 3 PCLKB	2 ICLK	
0008 8155h	TPU4	Timer status register	TSR	8	8	2, 3 PCLKB	2 ICLK	
0008 8156h	TPU4	Timer counter	TCNT	16	16	2, 3 PCLKB	2 ICLK	
0008 8158h	TPU4	Timer general register A	TGRA	16	16	2, 3 PCLKB	2 ICLK	
0008 815Ah	TPU4	Timer general register B	TGRB	16	16	2, 3 PCLKB	2 ICLK	
0008 8160h	TPU5	Timer control register	TCR	8	8	2, 3 PCLKB	2 ICLK	
0008 8161h	TPU5	Timer mode register	TMDR	8	8	2, 3 PCLKB	2 ICLK	
0008 8162h	TPU5	Timer I/O control register	TIOR	8	8	2, 3 PCLKB	2 ICLK	
0008 8164h	TPU5	Timer interrupt enable register	TIER	8	8	2, 3 PCLKB	2 ICLK	
0008 8165h	TPU5	Timer status register	TSR	8	8	2, 3 PCLKB	2 ICLK	
0008 8166h	TPU5	Timer counter	TCNT	16	16	2, 3 PCLKB	2 ICLK	
0008 8168h	TPU5	Timer general register A	TGRA	16	16	2, 3 PCLKB	2 ICLK	
0008 816Ah	TPU5	Timer general register B	TGRB	16	16	2, 3 PCLKB	2 ICLK	
0008 8170h	TPUB	Timer start register	TSTR	8	8	2, 3 PCLKB	2 ICLK	
0008 8171h	TPUB	Timer synchronous register	TSYR	8	8	2, 3 PCLKB	2 ICLK	
0008 8178h	TPU6	Noise filter control register	NFCR	8	8	2, 3 PCLKB	2 ICLK	
0008 8179h	TPU7	Noise filter control register	NFCR	8	8	2, 3 PCLKB	2 ICLK	
0008 817Ah	TPU8	Noise filter control register	NFCR	8	8	2, 3 PCLKB	2 ICLK	
0008 817Bh	TPU9	Noise filter control register	NFCR	8	8	2, 3 PCLKB	2 ICLK	
0008 817Ch	TPU10	Noise filter control register	NFCR	8	8	2, 3 PCLKB	2 ICLK	
0008 817Dh	TPU11	Noise filter control register	NFCR	8	8	2, 3 PCLKB	2 ICLK	
0008 8180h	TPU6	Timer control register	TCR	8	8	2, 3 PCLKB	2 ICLK	
0008 8181h	TPU6	Timer mode register	TMDR	8	8	2, 3 PCLKB	2 ICLK	
0008 8182h	TPU6	Timer I/O control register H	TIORH	8	8	2, 3 PCLKB	2 ICLK	
0008 8183h	TPU6	Timer I/O control register L	TIORL	8	8	2, 3 PCLKB	2 ICLK	
0008 8184h	TPU6	Timer interrupt enable register	TIER	8	8	2, 3 PCLKB	2 ICLK	
0008 8185h	TPU6	Timer status register	TSR	8	8	2, 3 PCLKB	2 ICLK	
0008 8186h	TPU6	Timer counter	TCNT	16	16	2, 3 PCLKB	2 ICLK	
0008 8188h	TPU6	Timer general register A	TGRA	16	16	2, 3 PCLKB	2 ICLK	
0008 818Ah	TPU6	Timer general register B	TGRB	16	16	2, 3 PCLKB	2 ICLK	
0008 818Ch	TPU6	Timer general register C	TGRC	16	16	2, 3 PCLKB	2 ICLK	
0008 818Eh	TPU6	Timer general register D	TGRD	16	16	2, 3 PCLKB	2 ICLK	
0008 8190h	TPU7	Timer control register	TCR	8	8	2, 3 PCLKB	2 ICLK	
0008 8191h	TPU7	Timer mode register	TMDR	8	8	2, 3 PCLKB	2 ICLK	
0008 8192h	TPU7	Timer I/O control register	TIOR	8	8	2, 3 PCLKB	2 ICLK	
0008 8194h	TPU7	Timer interrupt enable register	TIER	8	8	2, 3 PCLKB	2 ICLK	
0008 8195h	TPU7	Timer status register	TSR	8	8	2, 3 PCLKB	2 ICLK	
0008 8196h	TPU7	Timer counter	TCNT	16	16	2, 3 PCLKB	2 ICLK	
0008 8198h	TPU7	Timer general register A	TGRA	16	16	2, 3 PCLKB	2 ICLK	
0008 819Ah	TPU7	Timer general register B	TGRB	16	16	2, 3 PCLKB	2 ICLK	
0008 81A0h	TPU8	Timer control register	TCR	8	8	2, 3 PCLKB	2 ICLK	
0008 81A1h	TPU8	Timer mode register	TMDR	8	8	2, 3 PCLKB	2 ICLK	
0008 81A2h	TPU8	Timer I/O control register	TIOR	8	8	2, 3 PCLKB	2 ICLK	
0008 81A4h	TPU8	Timer interrupt enable register	TIER	8	8	2, 3 PCLKB	2 ICLK	
0008 81A5h	TPU8	Timer status register	TSR	8	8	2, 3 PCLKB	2 ICLK	
0008 81A6h	TPU8	Timer counter	TCNT	16	16	2, 3 PCLKB	2 ICLK	

Table 4.1 List of I/O Registers (Address Order) (21/50)

Address	Module Symbol	Register Name	Register Symbol	Number of Bits	Access Size	Number of Access States		Related Function
						ICLK≥PCLK	ICLK<PCLK	
0008 83BAh	RSPI1	RSPI command register 5	SPCMD5	16	16	2, 3 PCLKB	2 ICLK	RSPI
0008 83BCh	RSPI1	RSPI command register 6	SPCMD6	16	16	2, 3 PCLKB	2 ICLK	
0008 83BEh	RSPI1	RSPI command register 7	SPCMD7	16	16	2, 3 PCLKB	2 ICLK	
0008 83C0h	RSPI2	RSPI control register	SPCR	8	8	2, 3 PCLKB	2 ICLK	
0008 83C1h	RSPI2	RSPI slave select polarity register	SSLP	8	8	2, 3 PCLKB	2 ICLK	
0008 83C2h	RSPI2	RSPI pin control register	SPPCR	8	8	2, 3 PCLKB	2 ICLK	
0008 83C3h	RSPI2	RSPI status register	SPSR	8	8	2, 3 PCLKB	2 ICLK	
0008 83C4h	RSPI2	RSPI data register	SPDR	32	16, 32	2, 3 PCLKB	2 ICLK	
0008 83C8h	RSPI2	RSPI sequence control register	SPSCR	8	8	2, 3 PCLKB	2 ICLK	
0008 83C9h	RSPI2	RSPI sequence status register	SPSSR	8	8	2, 3 PCLKB	2 ICLK	
0008 83CAh	RSPI2	RSPI bit rate register	SPBR	8	8	2, 3 PCLKB	2 ICLK	
0008 83CBh	RSPI2	RSPI data control register	SPDCR	8	8	2, 3 PCLKB	2 ICLK	
0008 83CCh	RSPI2	RSPI clock delay register	SPCKD	8	8	2, 3 PCLKB	2 ICLK	
0008 83CDh	RSPI2	RSPI slave select negation delay register	SSLND	8	8	2, 3 PCLKB	2 ICLK	
0008 83CEh	RSPI2	RSPI next-access delay register	SPND	8	8	2, 3 PCLKB	2 ICLK	
0008 83CFh	RSPI2	RSPI control register 2	SPCR2	8	8	2, 3 PCLKB	2 ICLK	
0008 83D0h	RSPI2	RSPI command register 0	SPCMD0	16	16	2, 3 PCLKB	2 ICLK	
0008 83D2h	RSPI2	RSPI command register 1	SPCMD1	16	16	2, 3 PCLKB	2 ICLK	
0008 83D4h	RSPI2	RSPI command register 2	SPCMD2	16	16	2, 3 PCLKB	2 ICLK	
0008 83D6h	RSPI2	RSPI command register 3	SPCMD3	16	16	2, 3 PCLKB	2 ICLK	
0008 83D8h	RSPI2	RSPI command register 4	SPCMD4	16	16	2, 3 PCLKB	2 ICLK	
0008 83DAh	RSPI2	RSPI command register 5	SPCMD5	16	16	2, 3 PCLKB	2 ICLK	
0008 83DCh	RSPI2	RSPI command register 6	SPCMD6	16	16	2, 3 PCLKB	2 ICLK	
0008 83DEh	RSPI2	RSPI command register 7	SPCMD7	16	16	2, 3 PCLKB	2 ICLK	
0008 8600h	MTU3	Timer control register	TCR	8	8	2, 3 PCLKB	2 ICLK	MTU2a
0008 8601h	MTU4	Timer control register	TCR	8	8	2, 3 PCLKB	2 ICLK	
0008 8602h	MTU3	Timer mode register	TMDR	8	8	2, 3 PCLKB	2 ICLK	
0008 8603h	MTU4	Timer mode register	TMDR	8	8	2, 3 PCLKB	2 ICLK	
0008 8604h	MTU3	Timer I/O control register H	TIORH	8	8	2, 3 PCLKB	2 ICLK	
0008 8605h	MTU3	Timer I/O control register L	TIORL	8	8	2, 3 PCLKB	2 ICLK	
0008 8606h	MTU4	Timer I/O control register H	TIORH	8	8	2, 3 PCLKB	2 ICLK	
0008 8607h	MTU4	Timer I/O control register L	TIORL	8	8	2, 3 PCLKB	2 ICLK	
0008 8608h	MTU3	Timer interrupt enable register	TIER	8	8	2, 3 PCLKB	2 ICLK	
0008 8609h	MTU4	Timer interrupt enable register	TIER	8	8	2, 3 PCLKB	2 ICLK	
0008 860Ah	MTU	Timer output master enable register	TOER	8	8	2, 3 PCLKB	2 ICLK	
0008 860Dh	MTU	Timer gate control register	TGCR	8	8	2, 3 PCLKB	2 ICLK	
0008 860Eh	MTU	Timer output control register 1	TOCR1	8	8	2, 3 PCLKB	2 ICLK	
0008 860Fh	MTU	Timer output control register 2	TOCR2	8	8	2, 3 PCLKB	2 ICLK	
0008 8610h	MTU3	Timer counter	TCNT	16	16	2, 3 PCLKB	2 ICLK	
0008 8612h	MTU4	Timer counter	TCNT	16	16	2, 3 PCLKB	2 ICLK	
0008 8614h	MTU	Timer cycle data register	TCDR	16	16	2, 3 PCLKB	2 ICLK	
0008 8616h	MTU	Timer dead time data register	TDDR	16	16	2, 3 PCLKB	2 ICLK	
0008 8618h	MTU3	Timer general register A	TGRA	16	16	2, 3 PCLKB	2 ICLK	
0008 861Ah	MTU3	Timer general register B	TGRB	16	16	2, 3 PCLKB	2 ICLK	
0008 861Ch	MTU4	Timer general register A	TGRA	16	16	2, 3 PCLKB	2 ICLK	
0008 861Eh	MTU4	Timer general register B	TGRB	16	16	2, 3 PCLKB	2 ICLK	
0008 8620h	MTU	Timer subcounter	TCNTS	16	16	2, 3 PCLKB	2 ICLK	
0008 8622h	MTU	Timer cycle buffer register	TCBR	16	16	2, 3 PCLKB	2 ICLK	
0008 8624h	MTU3	Timer general register C	TGRC	16	16	2, 3 PCLKB	2 ICLK	
0008 8626h	MTU3	Timer general register D	TGRD	16	16	2, 3 PCLKB	2 ICLK	
0008 8628h	MTU4	Timer general register C	TGRC	16	16	2, 3 PCLKB	2 ICLK	

Table 4.1 List of I/O Registers (Address Order) (42/50)

Address	Module Symbol	Register Name	Register Symbol	Number of Bits	Access Size	Number of Access States		Related Function
						ICLK≥PCLK	ICLK<PCLK	
000A 0090h	USB0	Pipe 1 transaction counter enable register	PIPE1TRE	16	16	9 PCLKB or more	Rounded up to the nearest integer greater than 1 + 9/ (frequency ratio of ICLK/ PCLKB)*6	
000A 0092h	USB0	Pipe 1 transaction counter register	PIPE1TRN	16	16	9 PCLKB or more	Rounded up to the nearest integer greater than 1 + 9/ (frequency ratio of ICLK/ PCLKB)*6	
000A 0094h	USB0	Pipe 2 transaction counter enable register	PIPE2TRE	16	16	9 PCLKB or more	Rounded up to the nearest integer greater than 1 + 9/ (frequency ratio of ICLK/ PCLKB)*6	
000A 0096h	USB0	Pipe 2 transaction counter register	PIPE2TRN	16	16	9 PCLKB or more	Rounded up to the nearest integer greater than 1 + 9/ (frequency ratio of ICLK/ PCLKB)*6	USBa
000A 0098h	USB0	Pipe 3 transaction counter enable register	PIPE3TRE	16	16	9 PCLKB or more	Rounded up to the nearest integer greater than 1 + 9/ (frequency ratio of ICLK/ PCLKB)*6	
000A 009Ah	USB0	Pipe 3 transaction counter register	PIPE3TRN	16	16	9 PCLKB or more	Rounded up to the nearest integer greater than 1 + 9/ (frequency ratio of ICLK/ PCLKB)*6	
000A 009Ch	USB0	Pipe 4 transaction counter enable register	PIPE4TRE	16	16	9 PCLKB or more	Rounded up to the nearest integer greater than 1 + 9/ (frequency ratio of ICLK/ PCLKB)*6	
000A 009Eh	USB0	Pipe 4 transaction counter register	PIPE4TRN	16	16	9 PCLKB or more	Rounded up to the nearest integer greater than 1 + 9/ (frequency ratio of ICLK/ PCLKB)*6	
000A 00A0h	USB0	Pipe 5 transaction counter enable register	PIPE5TRE	16	16	9 PCLKB or more	Rounded up to the nearest integer greater than 1 + 9/ (frequency ratio of ICLK/ PCLKB)*6	
000A 00A2h	USB0	Pipe 5 transaction counter register	PIPE5TRN	16	16	9 PCLKB or more	Rounded up to the nearest integer greater than 1 + 9/ (frequency ratio of ICLK/ PCLKB)*6	

Table 4.1 List of I/O Registers (Address Order) (48/50)

Address	Module Symbol	Register Name	Register Symbol	Number of Bits	Access Size	Number of Access States		Related Function
						ICLK≥PCLK	ICLK<PCLK	
000A 02A0h	USB1	Pipe 5 transaction counter enable register	PIPE5TRE	16	16	9 PCLKB or more	Rounded up to the nearest integer greater than 1 + 9/ (frequency ratio of ICLK/ PCLKB)*6	
000A 02A2h	USB1	Pipe 5 transaction counter register	PIPE5TRN	16	16	9 PCLKB or more	Rounded up to the nearest integer greater than 1 + 9/ (frequency ratio of ICLK/ PCLKB)*6	
000A 0400h	USB	Deep standby USB transceiver control/pin monitor register	DPUSR0R	32	32	9 PCLKB or more	Rounded up to the nearest integer greater than 1 + 9/ (frequency ratio of ICLK/ PCLKB)*6	
000A 0404h	USB	Deep standby USB suspend/resume interrupt register	DPUSR1R	32	32	9 PCLKB or more	Rounded up to the nearest integer greater than 1 + 9/ (frequency ratio of ICLK/ PCLKB)*6	
000A 0500h	PDC	PDC Control Register 0	PCCR0	32	32	2, 3PCLKA	2 ICLK	PDC
000A 0504h	PDC	PDC Control Register 1	PCCR1	32	32	2, 3PCLKA	2 ICLK	
000A 0508h	PDC	PDC Status Register	PCSR	32	32	2, 3PCLKA	2 ICLK	
000A 050Ch	PDC	PDC Pin Monitor Register	PCMONR	32	32	2, 3PCLKA	2 ICLK	
000A 0510h	PDC	PDC Receive Data Register	PCDR	32	32	2, 3PCLKA	2 ICLK	
000A 0514h	PDC	Vertical Capture Register	VCR	32	32	2, 3PCLKA	2 ICLK	
000A 0518h	PDC	Horizontal Capture Register	HCR	32	32	2, 3PCLKA	2 ICLK	
000C 0000h	EDMAC	EDMAC mode register	EDMR	32	32	5, 6 PCLKA	—	EDMAC
000C 0008h	EDMAC	EDMAC transmit request register	EDTRR	32	32	5, 6 PCLKA	—	
000C 0010h	EDMAC	EDMAC receive request register	EDRRR	32	32	5, 6 PCLKA	—	
000C 0018h	EDMAC	Transmit descriptor list start address register	TDLAR	32	32	5, 6 PCLKA	—	
000C 0020h	EDMAC	Receive descriptor list start address register	RDLAR	32	32	5, 6 PCLKA	—	
000C 0028h	EDMAC	ETHERC/EDMAC status register	EESR	32	32	5, 6 PCLKA	—	
000C 0030h	EDMAC	ETHERC/EDMAC status interrupt permission register	EESIPR	32	32	5, 6 PCLKA	—	
000C 0038h	EDMAC	Transmit/receive status copy enable register	TRSCER	32	32	5, 6 PCLKA	—	
000C 0040h	EDMAC	Receive missed-frame counter register	RMFCR	32	32	5, 6 PCLKA	—	
000C 0048h	EDMAC	Transmit FIFO threshold register	TFTR	32	32	5, 6 PCLKA	—	
000C 0050h	EDMAC	FIFO depth register	FDR	32	32	5, 6 PCLKA	—	
000C 0058h	EDMAC	Receiving method control register	RMCR	32	32	5, 6 PCLKA	—	
000C 0064h	EDMAC	Transmit FIFO underrun counter	TFUCR	32	32	5, 6 PCLKA	—	
000C 0068h	EDMAC	Receive FIFO overflow counter	RFOCR	32	32	5, 6 PCLKA	—	
000C 006Ch	EDMAC	Independent output signal setting register	IOSR	32	32	5, 6 PCLKA	—	EDMAC
000C 0070h	EDMAC	Flow control start FIFO threshold setting register	FCFTR	32	32	5, 6 PCLKA	—	
000C 0078h	EDMAC	Receive data padding insert register	RPADIR	32	32	5, 6 PCLKA	—	
000C 007Ch	EDMAC	Transmit interrupt setting register	TRIMD	32	32	5, 6 PCLKA	—	
000C 00C8h	EDMAC	Receive buffer write address register	RBWAR	32	32	5, 6 PCLKA	—	
000C 00CCh	EDMAC	Receive descriptor fetch address register	RDFAR	32	32	5, 6 PCLKA	—	
000C 00D4h	EDMAC	Transmit buffer read address register	TBRAR	32	32	5, 6 PCLKA	—	
000C 00D8h	EDMAC	Transmit descriptor fetch address register	TDFAR	32	32	5, 6 PCLKA	—	

5. Electrical Characteristics

5.1 Absolute Maximum Ratings

Table 5.1 Absolute Maximum Ratings

Conditions: VSS = AVSS0 = VREFL/VREFL0 = VSS_USB = 0 V

Item		Symbol	Value	Unit
Power supply voltage		VCC, VCC_USB	–0.3 to +4.6	V
V_{BATT} power supply voltage		V_{BATT}	–0.3 to +4.6	V
Input voltage (except for ports for 5 V tolerant*1)		V_{in}	–0.3 to VCC + 0.3	V
Input voltage (ports for 5 V tolerant*1)		V_{in}	–0.3 to +5.8	V
Reference power supply voltage		VREFH	–0.3 to VCC + 0.3	V
Analog power supply voltage		AVCC*2	–0.3 to +4.6	V
Analog input voltage		V_{AN}	–0.3 to VCC + 0.3	V
Operating temperature	D version	T_{opr}	–40 to +85	°C
	G version		–40 to +105	°C
Storage temperature		T_{stg}	–55 to +125	°C

Caution: Permanent damage to the LSI may result if absolute maximum ratings are exceeded.

Note 1. Ports 07, 12 to 17, 20, 21, 30 to 33, 67, and C0 to C3 are 5 V tolerant.

Note 2. Connect AVCC0 to VCC. When neither the A/D converter nor the D/A converter is in use, do not leave the AVCC0, VREFH/VREFH0, AVSS0, and VREFL/VREFL0 pins open. Connect the AVCC0 and VREFH/VREFH0 pins to VCC, and the AVSS0 and VREFL/VREFL0 pins to VSS, respectively.

Table 5.4 DC Characteristics (3) (for D and G Versions (-40 ≤ Ta ≤ +85°C))

Conditions: VCC = AVCC0 = VREFH = VCC_USB = V_{BATT} = 2.7 to 3.6 V, VREFH0 = 2.7 V to AVCC0,
VSS = AVSS0 = VREFL/VREFL0 = VSS_USB = 0 V, $T_a = T_{opr}$

Item	Symbol	Min.	Typ.	Max.	Unit	Test Conditions
RAM standby voltage	V_{RAM}	2.7	—	—	V	
VCC rising gradient	SrVCC	8.4	—	20000	μs/V	
VCC falling gradient*8	SfVCC	8.4	—	—	μs/V	

Note 1. Supply current values are with all output pins unloaded and all input pull-up MOSs in the off state.
Note 2. Measured with clocks supplied to the peripheral functions. This does not include the BGO operation.
Note 3. I_{CC} depends on f (ICLK) as follows. (ICLK:PCLK:BCLK:BCLK pin = 8:4:4:2)
I_{CC} Max. = 0.87 × f + 13 (max. operation in high-speed operating mode)
I_{CC} Typ. = 0.35 × f + 5 (normal operation in high-speed operating mode)
I_{CC} Typ. = 1.0 × f + 3 (low-speed operating mode 1)
I_{CC} Max. = 0.53 × f + 12 (sleep mode)
Note 4. This does not include the BGO operation.
Note 5. This is the increase for programming or erasure of the ROM or flash memory for data storage during program execution.
Note 6. Supply of the clock signal to peripherals is stopped in this state. This does not include the BGO operation.
Note 7. The reference power supply current is included in the power supply current value for 10-bit A/D conversion and D/A conversion.
Note 8. When V_{BATT} is used
Note 9. The current values for 10-bit A/D converter and 10-bit D/A converter are included in the current from the VREFH pin.
Note 10. The values are the sum of I_{AVCC0} and I_{VREFH}.

Note 1. Supply current values are with all output pins unloaded and all input pull-up MOSs in the off state.
Note 2. Measured with clocks supplied to the peripheral functions. This does not include the BGO operation.
Note 3. I_{CC} depends on f (ICLK) as follows. (ICLK:PCLK:BCLK:BCLK pin = 8:4:4:2)
I_{CC} Max. = 0.87 × f + 13 (max. operation in high-speed operating mode)
I_{CC} Typ. = 0.35 × f + 5 (normal operation in high-speed operating mode)
I_{CC} Typ. = 1.0 × f + 3 (low-speed operating mode 1)
I_{CC} Max. = 0.53 × f + 12 (sleep mode)
Note 4. This does not include the BGO operation.
Note 5. This is the increase for programming or erasure of the ROM or flash memory for data storage during program execution.
Note 6. Supply of the clock signal to peripherals is stopped in this state. This does not include the BGO operation.
Note 7. The reference power supply current is included in the power supply current value for 10-bit A/D conversion and D/A conversion.
Note 8. When V_{BATT} is used
Note 9. The current values for 10-bit A/D converter and 10-bit D/A converter are included in the current from the VREFH pin.
Note 10. The values are the sum of I_{AVCC0} and I_{VREFH}.

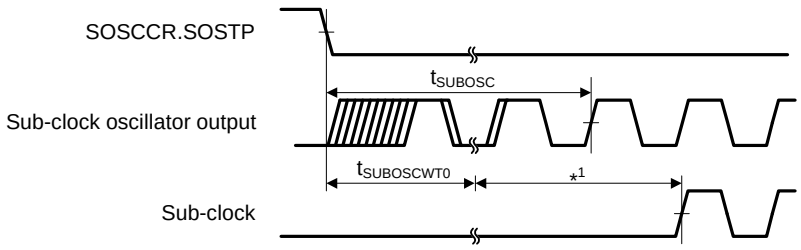

Note: This is the waiting period obtained by setting the SOCCWTCR.SSTS[4:0] bits.

Figure 5.12 Sub-Clock Oscillation Start Timing

5.3.3 Timing of Recovery from Low Power Consumption Modes

Table 5.14 Timing of Recovery from Low Power Consumption Modes

Conditions: VCC = AVCC0 = VREFH = VCC_USB = V_{BATT} = 2.7 to 3.6 V, VREFH0 = 2.7 V to AVCC0, VSS = AVSS0 = VREFL/VREFL0 = VSS_USB = 0 V, $T_a = T_{opr}$

Item			Symbol	Min.	Typ.	Max.	Unit	Test Conditions
Recovery time after cancellation of software standby mode	Crystal resonator connected to main clock oscillator	Main clock oscillator operating	t_{SBYMC}	10	—	—	ms	Figure 5.13
		Main clock oscillator and PLL circuit operating	t_{SBYPC}	10	—	—	ms	
	External clock input to main clock oscillator	Main clock oscillator operating	t_{SBYEX}	1	—	—	ms	
		Main clock oscillator and PLL circuit operating	t_{SBYPE}	1	—	—	ms	
	Sub-clock oscillator operating		t_{SBYSC}	2	—	—	s	
	High-speed on-chip oscillator operating		t_{SBYHO}	—	—	2	ms	
	Low-speed on-chip oscillator or IWDT-dedicated on-chip oscillator operating		t_{SBYLO}	—	—	800	μs	
Recovery time after cancellation of deep software standby mode			t_{DSBY}	—	—	1.0	ms	Figure 5.14
Wait time after cancellation of deep software standby mode			t_{DSBYWT}	45	—	46	t_{cyc}	

Note: The wait time varies depending on the state in which each oscillator was when the WAIT instruction was executed. The recovery time when multiple oscillators are operating is the same period as that when the oscillator which requires the longest time of all operating oscillators to recover is operating alone.

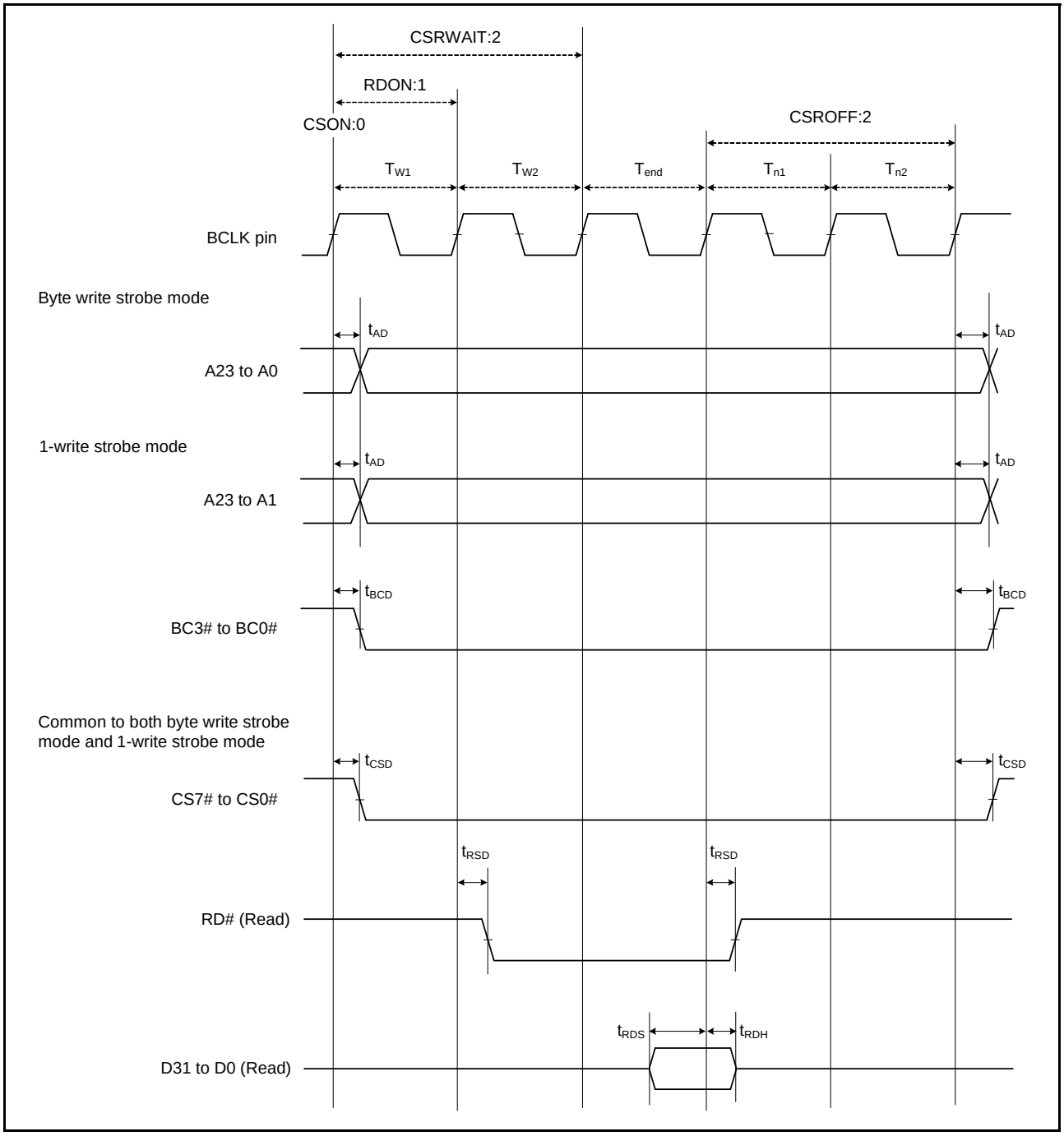

Figure 5.19 External Bus Timing/Normal Read Cycle (Bus Clock Synchronized)

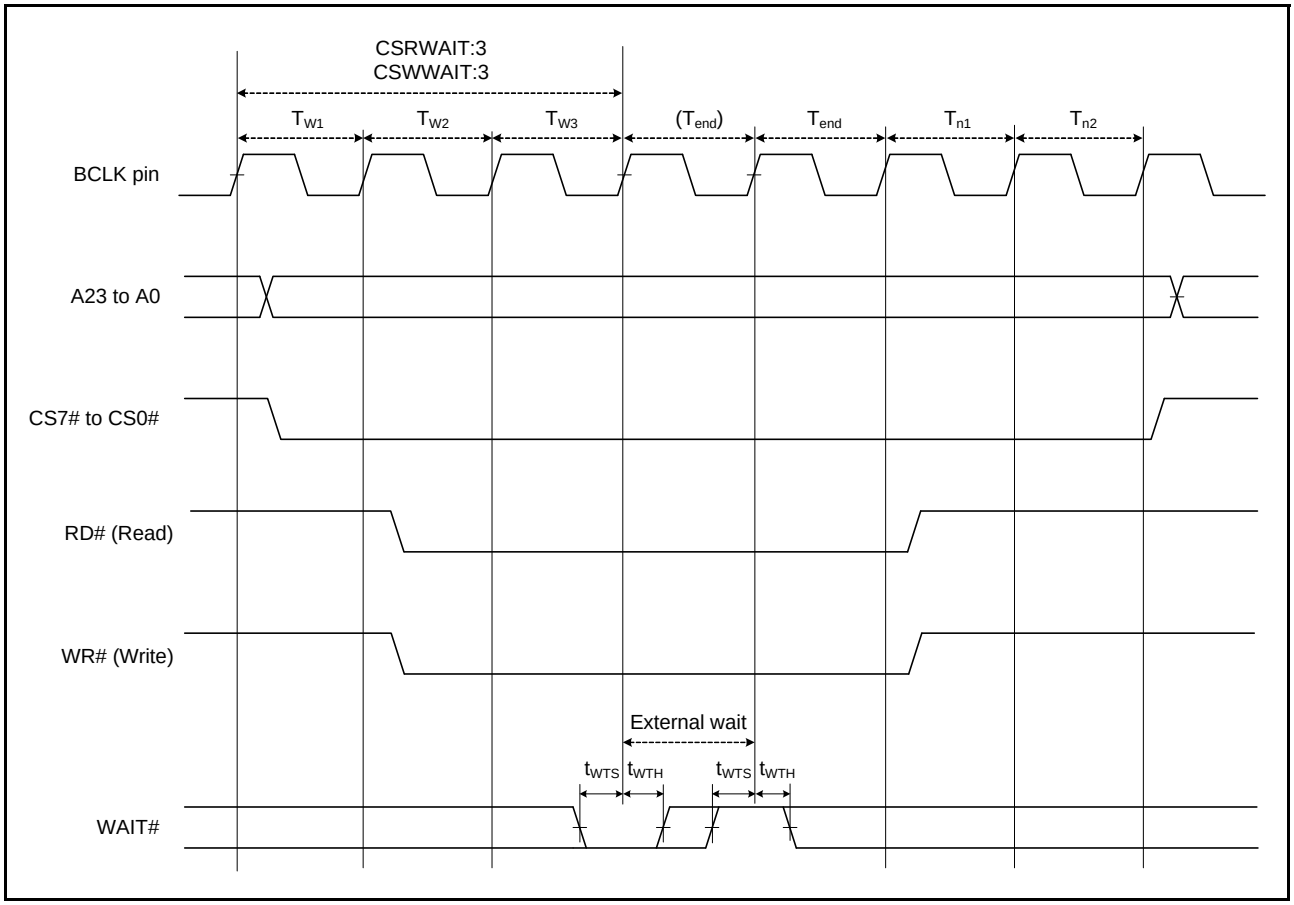

Figure 5.23 External Bus Timing/External Wait Control

5.6 D/A Conversion Characteristics

Table 5.31 D/A Conversion Characteristics

Conditions: VCC = AVCC0 = VREFH = VCC_USB = 2.7 to 3.6 V, VREFH0 = 2.7 V to VCC
VSS = AVSS0 = VREFL/VREFL0 = VSS_USB = 0 V
$T_a = T_{opr}$

Item	Min.	Typ.	Max.	Unit	Test Conditions
Resolution	10	10	10	Bit	
Conversion time	—	—	3.0	μs	20-pF capacitive load
Absolute accuracy	—	±2.0	±4.0	LSB	2-MΩ resistive load
	—	—	±3.0	LSB	4-MΩ resistive load
	—	—	±2.0	LSB	10-MΩ resistive load
RO output resistance	—	3.6	—	kΩ	

5.7 Temperature Sensor Characteristics

Table 5.32 Temperature Sensor Characteristics

Conditions: VCC = AVCC0 = VREFH = VCC_USB = 2.7 to 3.6 V, VREFH0 = 2.7 V to VCC
VSS = AVSS0 = VREFL/VREFL0 = VSS_USB = 0 V
$T_a = T_{opr}$

Item	Min.	Typ.	Max.	Unit	Test Conditions
Relative accuracy	—	±1	—	°C	
Temperature slope	—	4.1	—	mV/°C	
Output voltage (@25°C)	—	1.26	—	V	
Temperature sensor start time	—	—	30	μs	
Sampling time	—	—	5	μs	

5.13 Boundary Scan

Table 5.40 Boundary Scan

Conditions: VCC = AVCC0 = VREFH = VCC_USB = 2.7 to 3.6V, VREFH0 = 2.7V to AVCC0
VSS = AVSS0 = VREFL/VREFL0 = VSS_USB = 0V
$T_a = T_{opr}$

Item	Symbol	Min.	Typ.	Max.	Unit	Test Conditions
TCK clock cycle time	t_{TCKcyc}	100	—	—	ns	Figure 5.70
TCK clock high pulse width	t_{TCKH}	45	—	—	ns	
TCK clock low pulse width	t_{TCKL}	45	—	—	ns	
TCK clock rise time	t_{TCKr}	—	—	5	ns	
TCK clock fall time	t_{TCKf}	—	—	5	ns	
TRST# pulse width	t_{TRSTW}	20	—	—	t_{TCKcyc}	Figure 5.71
TMS setup time	t_{TMSS}	20	—	—	ns	Figure 5.72
TMS hold time	t_{TMSH}	20	—	—	ns	
TDI setup time	t_{TDIS}	20	—	—	ns	
TDI hold time	t_{TDIH}	20	—	—	ns	
TDO data delay time	t_{TDOD}	—	—	40	ns	

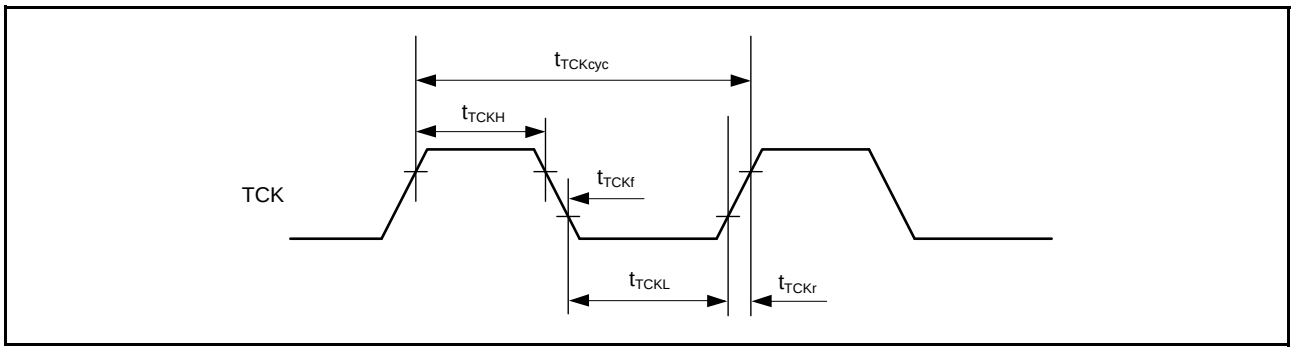

Figure 5.70 Boundary Scan TCK Timing

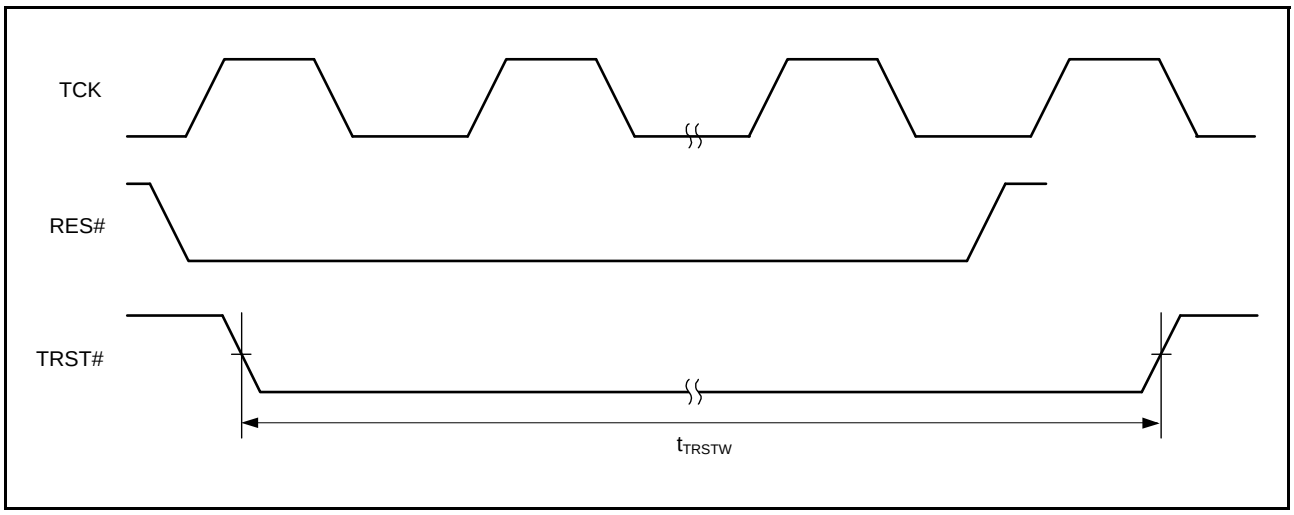

Figure 5.71 Boundary Scan TRST# Timing