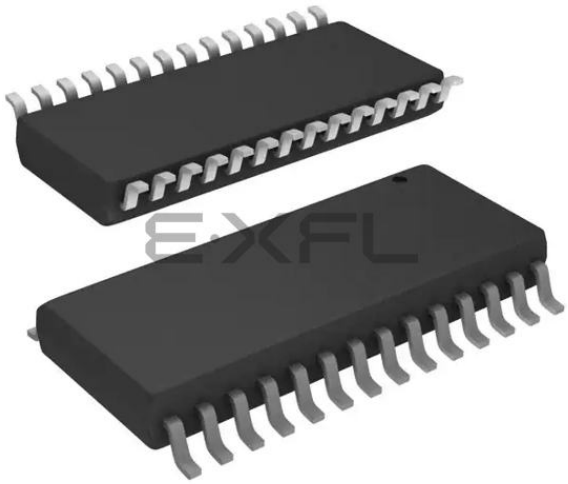

Welcome to E-XFL.COM

What is "Embedded - Microcontrollers"?

"Embedded - Microcontrollers" refer to small, integrated circuits designed to perform specific tasks within larger systems. These microcontrollers are essentially compact computers on a single chip, containing a processor core, memory, and programmable input/output peripherals. They are called "embedded" because they are embedded within electronic devices to control various functions, rather than serving as standalone computers. Microcontrollers are crucial in modern electronics, providing the intelligence and control needed for a wide range of applications.

Applications of "Embedded - Microcontrollers"

Details	
Product Status	Active
Core Processor	MIPS32® M4K™
Core Size	32-Bit Single-Core
Speed	40MHz
Connectivity	I²C, IrDA, LINbus, PMP, SPI, UART/USART
Peripherals	Brown-out Detect/Reset, DMA, I²S, POR, PWM, WDT
Number of I/O	21
Program Memory Size	128KB (128K x 8)
Program Memory Type	FLASH
EEPROM Size	-
RAM Size	32K x 8
Voltage - Supply (Vcc/Vdd)	2.3V ~ 3.6V
Data Converters	A/D 10x10b
Oscillator Type	Internal
Operating Temperature	-40°C ~ 85°C (TA)
Mounting Type	Surface Mount
Package / Case	28-SOIC (0.295", 7.50mm Width)
Supplier Device Package	28-SOIC
Purchase URL	https://www.e-xfl.com/product-detail/microchip-technology/pic32mx150f128bt-i-so

Table of Contents

1.0 Device Overview 19
2.0 Guidelines for Getting Started with 32-bit MCUs 27
3.0 CPU 33
4.0 Memory Organization 37
5.0 Flash Program Memory 53
6.0 Resets 59
7.0 Interrupt Controller 63
8.0 Oscillator Configuration 73
9.0 Direct Memory Access (DMA) Controller 83
10.0 USB On-The-Go (OTG) 103
11.0 I/O Ports 127
12.0 Timer1 143
13.0 Timer2/3, Timer4/5 147
14.0 Watchdog Timer (WDT) 153
15.0 Input Capture 157
16.0 Output Compare 161
17.0 Serial Peripheral Interface (SPI) 165
18.0 Inter-Integrated Circuit (I^2C) 173
19.0 Universal Asynchronous Receiver Transmitter (UART) 181
20.0 Parallel Master Port (PMP) 189
21.0 Real-Time Clock and Calendar (RTCC) 199
22.0 10-bit Analog-to-Digital Converter (ADC) 209
23.0 Comparator 219
24.0 Comparator Voltage Reference (CVREF) 223
25.0 Charge Time Measurement Unit (CTMU) 227
26.0 Power-Saving Features 233
27.0 Special Features 239
28.0 Instruction Set 251
29.0 Development Support 253
30.0 Electrical Characteristics 257
31.0 50 MHz Electrical Characteristics 301
32.0 DC and AC Device Characteristics Graphs 307
33.0 Packaging Information 311
The Microchip Web Site 341
Customer Change Notification Service 341
Customer Support 341
Product Identification System 342

© 2011-2016 Microchip Technology Inc.

FIGURE 2-1: RECOMMENDED MINIMUM CONNECTION

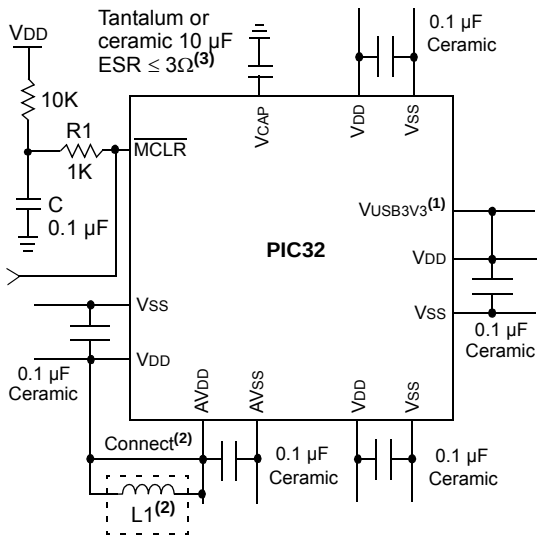

Note 1: If the USB module is not used, this pin must be connected to VDD.

2: As an option, instead of a hard-wired connection, an inductor (L1) can be substituted between VDD and AVDD to improve ADC noise rejection. The inductor impedance should be less than 3Ω and the inductor capacity greater than 10 mA.

Where:

$$f = \frac{F_{CNV}}{2} \quad \text{(i.e., ADC conversion rate/2)}$$

$$f = \frac{1}{(2\pi\sqrt{LC})}$$

$$L = \left(\frac{1}{(2\pi f\sqrt{C})}\right)^2$$

1: Aluminum or electrolytic capacitors should not be used. ESR ≤ 3Ω from -40ºC to 125ºC @ SYSCLK frequency (i.e., MIPS).

2.2.1 BULK CAPACITORS

The use of a bulk capacitor is recommended to improve power supply stability. Typical values range from 4.7 µF to 47 µF. This capacitor should be located as close to the device as possible.

2.3 Capacitor on Internal Voltage Regulator (VCAP)

2.3.1 INTERNAL REGULATOR MODE

A low-ESR (3 ohm) capacitor is required on the VCAP pin, which is used to stabilize the internal voltage regulator output. The VCAP pin must not be connected to VDD, and must have a CEFC capacitor, with at least a 6V rating, connected to ground. The type can be ceramic or tantalum. Refer to **30.0 "Electrical Characteristics"** for additional information on CEFC specifications.

2.4 Master Clear ($\overline{\text{MCLR}}$) Pin

The $\overline{\text{MCLR}}$ pin provides two specific device functions:

- Device Reset
- Device programming and debugging

Pulling The $\overline{\text{MCLR}}$ pin low generates a device Reset. Figure 2-2 illustrates a typical $\overline{\text{MCLR}}$ circuit. During device programming and debugging, the resistance and capacitance that can be added to the pin must be considered. Device programmers and debuggers drive the $\overline{\text{MCLR}}$ pin. Consequently, specific voltage levels (VIH and VIL) and fast signal transitions must not be adversely affected. Therefore, specific values of R and C will need to be adjusted based on the application and PCB requirements.

For example, as illustrated in Figure 2-2, it is recommended that the capacitor C, be isolated from the $\overline{\text{MCLR}}$ pin during programming and debugging operations.

Place the components illustrated in Figure 2-2 within one-quarter inch (6 mm) from the $\overline{\text{MCLR}}$ pin.

FIGURE 2-2: EXAMPLE OF $\overline{\text{MCLR}}$ PIN CONNECTIONS

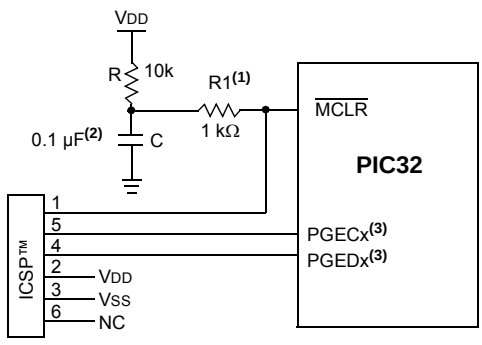

Note 1: 470Ω ≤ R1 ≤ 1Ω will limit any current flowing into $\overline{\text{MCLR}}$ from the external capacitor C, in the event of $\overline{\text{MCLR}}$ pin breakdown, due to Electrostatic Discharge (ESD) or Electrical Overstress (EOS). Ensure that the $\overline{\text{MCLR}}$ pin VIH and VIL specifications are met without interfering with the Debug/Programmer tools.

2: The capacitor can be sized to prevent unintentional Resets from brief glitches or to extend the device Reset period during POR.

3: No pull-ups or bypass capacitors are allowed on active debug/program PGECx/PGEDx pins.

2.5 ICSP Pins

The PGECx and PGEDx pins are used for ICSP and debugging purposes. It is recommended to keep the trace length between the ICSP connector and the ICSP pins on the device as short as possible. If the ICSP connector is expected to experience an ESD event, a series resistor is recommended, with the value in the range of a few tens of Ohms, not to exceed 100 Ohms.

© 2011-2016 Microchip Technology Inc.

REGISTER 4-2: BMXDKPBA: DATA RAM KERNEL PROGRAM BASE ADDRESS REGISTER

Bit Range	Bit 31/23/15/7	Bit 30/22/14/6	Bit 29/21/13/5	Bit 28/20/12/4	Bit 27/19/11/3	Bit 26/18/10/2	Bit 25/17/9/1	Bit 24/16/8/0
31:24	U-0	U-0	U-0	U-0	U-0	U-0	U-0	U-0
	—	—	—	—	—	—	—	—
23:16	U-0	U-0	U-0	U-0	U-0	U-0	U-0	U-0
	—	—	—	—	—	—	—	—
15:8	R/W-0	R/W-0	R/W-0	R/W-0	R/W-0	R/W-0	R-0	R-0
	BMXDKPBA<15:8>							
7:0	R-0	R-0	R-0	R-0	R-0	R-0	R-0	R-0
	BMXDKPBA<7:0>							

Legend:			
R = Readable bit	W = Writable bit	U = Unimplemented bit, read as ‘0’	
-n = Value at POR	‘1’ = Bit is set	‘0’ = Bit is cleared	x = Bit is unknown

bit 31-16 **Unimplemented:** Read as ‘0’

bit 15-10 **BMXDKPBA<15:10>:** DRM Kernel Program Base Address bits
When non-zero, this value selects the relative base address for kernel program space in RAM

bit 9-0 **BMXDKPBA<9:0>:** Read-Only bits
This value is always ‘0’, which forces 1 KB increments

Note 1: At Reset, the value in this register is forced to zero, which causes all of the RAM to be allocated to Kernal mode data usage.

2: The value in this register must be less than or equal to BMXDRMSZ.

REGISTER 4-3: BMXDUDBA: DATA RAM USER DATA BASE ADDRESS REGISTER

Bit Range	Bit 31/23/15/7	Bit 30/22/14/6	Bit 29/21/13/5	Bit 28/20/12/4	Bit 27/19/11/3	Bit 26/18/10/2	Bit 25/17/9/1	Bit 24/16/8/0
31:24	U-0	U-0	U-0	U-0	U-0	U-0	U-0	U-0
	—	—	—	—	—	—	—	—
23:16	U-0	U-0	U-0	U-0	U-0	U-0	U-0	U-0
	—	—	—	—	—	—	—	—
15:8	R/W-0	R/W-0	R/W-0	R/W-0	R/W-0	R/W-0	R-0	R-0
	BMXDUDBA<15:8>							
7:0	R-0	R-0	R-0	R-0	R-0	R-0	R-0	R-0
	BMXDUDBA<7:0>							

Legend:			
R = Readable bit	W = Writable bit	U = Unimplemented bit, read as ‘0’	
-n = Value at POR	‘1’ = Bit is set	‘0’ = Bit is cleared	x = Bit is unknown

bit 31-16 **Unimplemented:** Read as ‘0’

bit 15-10 **BMXDUDBA<15:10>:** DRM User Data Base Address bits

When non-zero, the value selects the relative base address for User mode data space in RAM, the value must be greater than BMXDKPBA.

bit 9-0 **BMXDUDBA<9:0>:** Read-Only bits

This value is always ‘0’, which forces 1 KB increments

Note 1: At Reset, the value in this register is forced to zero, which causes all of the RAM to be allocated to Kernal mode data usage.

2: The value in this register must be less than or equal to BMXDRMSZ.

© 2011-2016 Microchip Technology Inc.

REGISTER 4-4: BMXDUPBA: DATA RAM USER PROGRAM BASE ADDRESS REGISTER

Bit Range	Bit 31/23/15/7	Bit 30/22/14/6	Bit 29/21/13/5	Bit 28/20/12/4	Bit 27/19/11/3	Bit 26/18/10/2	Bit 25/17/9/1	Bit 24/16/8/0
31:24	U-0	U-0	U-0	U-0	U-0	U-0	U-0	U-0
	—	—	—	—	—	—	—	—
23:16	U-0	U-0	U-0	U-0	U-0	U-0	U-0	U-0
	—	—	—	—	—	—	—	—
15:8	R/W-0	R/W-0	R/W-0	R/W-0	R/W-0	R/W-0	R-0	R-0
	BMXDUPBA<15:8>							
7:0	R-0	R-0	R-0	R-0	R-0	R-0	R-0	R-0
	BMXDUPBA<7:0>							

Legend:			
R = Readable bit	W = Writable bit	U = Unimplemented bit, read as ‘0’	
-n = Value at POR	‘1’ = Bit is set	‘0’ = Bit is cleared	x = Bit is unknown

bit 31-16 **Unimplemented:** Read as ‘0’

bit 15-10 **BMXDUPBA<15:10>:** DRM User Program Base Address bits

When non-zero, the value selects the relative base address for User mode program space in RAM, BMXDUPBA must be greater than BMXDUDBA.

bit 9-0 **BMXDUPBA<9:0>:** Read-Only bits

This value is always ‘0’, which forces 1 KB increments

Note 1: At Reset, the value in this register is forced to zero, which causes all of the RAM to be allocated to Kernal mode data usage.

2: The value in this register must be less than or equal to BMXDRMSZ.

6.0 RESETS

Note: This data sheet summarizes the features of the PIC32MX1XX/2XX 28/36/44-pin Family of devices. It is not intended to be a comprehensive reference source. To complement the information in this data sheet, refer to **Section 7. "Resets"** (DS60001118), which is available from the *Documentation > Reference Manual* section of the Microchip PIC32 web site (www.microchip.com/pic32).

The Reset module combines all Reset sources and controls the device Master Reset signal, SYSRST. The following is a list of device Reset sources:

- Power-on Reset (POR)
- Master Clear Reset pin ($\overline{\text{MCLR}}$)
- Software Reset (SWR)
- Watchdog Timer Reset (WDTR)
- Brown-out Reset (BOR)
- Configuration Mismatch Reset (CMR)

A simplified block diagram of the Reset module is illustrated in Figure 6-1.

FIGURE 6-1: SYSTEM RESET BLOCK DIAGRAM

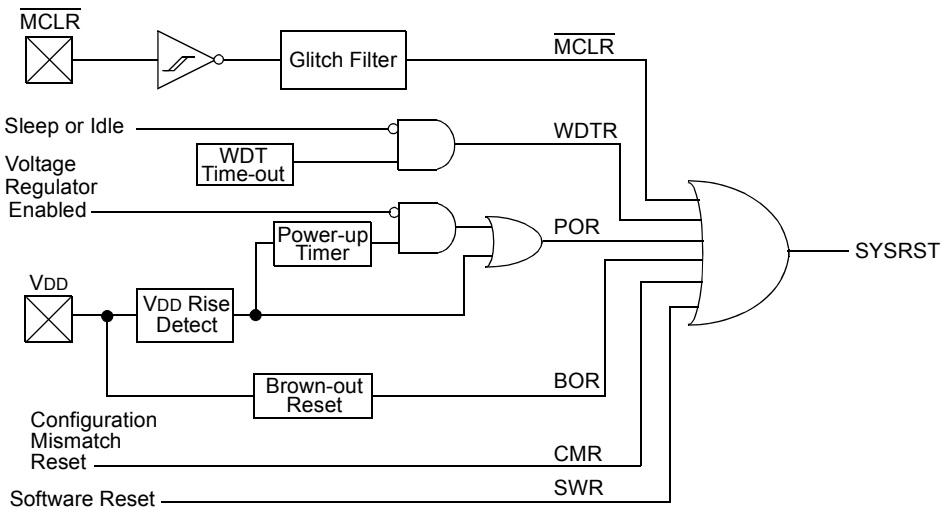

TABLE 9-3: DMA CHANNELS 0-3 REGISTER MAP (CONTINUED)

Virtual Address (BF88_#)	Register Name(1)	Bit Range	Bits 31/15	30/14	29/13	28/12	27/11	26/10	25/9	24/8	23/7	22/6	21/5	20/4	19/3	18/2	17/1	16/0	All Resets
3170	DCH1SSIZ	31:16	—	—	—	—	—	—	—	—	—	—	—	—	—	—	—	—	0000
		15:0	CHSSIZ<15:0>																0000
3180	DCH1DSIZ	31:16	—	—	—	—	—	—	—	—	—	—	—	—	—	—	—	—	0000
		15:0	CHDSIZ<15:0>																0000
3190	DCH1SPTR	31:16	—	—	—	—	—	—	—	—	—	—	—	—	—	—	—	—	0000
		15:0	CHSPTR<15:0>																0000
31A0	DCH1DPTR	31:16	—	—	—	—	—	—	—	—	—	—	—	—	—	—	—	—	0000
		15:0	CHDPTR<15:0>																0000
31B0	DCH1CSIZ	31:16	—	—	—	—	—	—	—	—	—	—	—	—	—	—	—	—	0000
		15:0	CHCSIZ<15:0>																0000
31C0	DCH1CPTR	31:16	—	—	—	—	—	—	—	—	—	—	—	—	—	—	—	—	0000
		15:0	CHCPTR<15:0>																0000
31D0	DCH1DAT	31:16	—	—	—	—	—	—	—	—	—	—	—	—	—	—	—	—	0000
		15:0	—	—	—	—	—	—	—	—	CHPDAT<7:0>								0000
31E0	DCH2CON	31:16	—	—	—	—	—	—	—	—	—	—	—	—	—	—	—	—	0000
		15:0	CHBUSY	—	—	—	—	—	—	CHCHNS	CHEN	CHAED	CHCHN	CHAEN	—	CHEDET	CHPRI<1:0>		0000
31F0	DCH2ECON	31:16	—	—	—	—	—	—	—	—	CHAIRQ<7:0>								00FF
		15:0	CHSIRQ<7:0>								CFORCE	CABORT	PATEN	SIRQEN	AIRQEN	—	—	—	FF00
3200	DCH2INT	31:16	—	—	—	—	—	—	—	—	CHSDIE	CHSHIE	CHDDIE	CHDHIE	CHBCIE	CHCCIE	CHTAIE	CHERIE	0000
		15:0	—	—	—	—	—	—	—	—	CHSDIF	CHSHIF	CHDDIF	CHDHIF	CHBCIF	CHCCIF	CHTAIF	CHERIF	0000
3210	DCH2SSA	31:16	CHSSA<31:0>																0000
		15:0																	0000
3220	DCH2DSA	31:16	CHDSA<31:0>																0000
		15:0																	0000
3230	DCH2SSIZ	31:16	—	—	—	—	—	—	—	—	—	—	—	—	—	—	—	—	0000
		15:0	CHSSIZ<15:0>																0000
3240	DCH2DSIZ	31:16	—	—	—	—	—	—	—	—	—	—	—	—	—	—	—	—	0000
		15:0	CHDSIZ<15:0>																0000
3250	DCH2SPTR	31:16	—	—	—	—	—	—	—	—	—	—	—	—	—	—	—	—	0000
		15:0	CHSPTR<15:0>																0000
3260	DCH2DPTR	31:16	—	—	—	—	—	—	—	—	—	—	—	—	—	—	—	—	0000
		15:0	CHDPTR<15:0>																0000
3270	DCH2CSIZ	31:16	—	—	—	—	—	—	—	—	—	—	—	—	—	—	—	—	0000
		15:0	CHCSIZ<15:0>																0000

Legend: x = unknown value on Reset; — = unimplemented, read as '0'. Reset values are shown in hexadecimal.

Note 1: All registers in this table have corresponding CLR, SET and INV registers at their virtual addresses, plus offsets of 0x4, 0x8 and 0xC, respectively. See **Section 11.2 "CLR, SET and INV Registers"** for more information.

© 2011-2016 Microchip Technology Inc.

REGISTER 9-10: DCHxSSA: DMA CHANNEL 'x' SOURCE START ADDRESS REGISTER

Bit Range	Bit 31/23/15/7	Bit 30/22/14/6	Bit 29/21/13/5	Bit 28/20/12/4	Bit 27/19/11/3	Bit 26/18/10/2	Bit 25/17/9/1	Bit 24/16/8/0
31:24	R/W-0	R/W-0	R/W-0	R/W-0	R/W-0	R/W-0	R/W-0	R/W-0
	CHSSA<31:24>							
23:16	R/W-0	R/W-0	R/W-0	R/W-0	R/W-0	R/W-0	R/W-0	R/W-0
	CHSSA<23:16>							
15:8	R/W-0	R/W-0	R/W-0	R/W-0	R/W-0	R/W-0	R/W-0	R/W-0
	CHSSA<15:8>							
7:0	R/W-0	R/W-0	R/W-0	R/W-0	R/W-0	R/W-0	R/W-0	R/W-0
	CHSSA<7:0>							

Legend:			
R = Readable bit	W = Writable bit	U = Unimplemented bit, read as '0'	
-n = Value at POR	'1' = Bit is set	'0' = Bit is cleared	x = Bit is unknown

bit 31-0 **CHSSA<31:0>** Channel Source Start Address bits
Channel source start address.
Note: This must be the physical address of the source.

REGISTER 9-11: DCHxDSA: DMA CHANNEL 'x' DESTINATION START ADDRESS REGISTER

Bit Range	Bit 31/23/15/7	Bit 30/22/14/6	Bit 29/21/13/5	Bit 28/20/12/4	Bit 27/19/11/3	Bit 26/18/10/2	Bit 25/17/9/1	Bit 24/16/8/0
31:24	R/W-0	R/W-0	R/W-0	R/W-0	R/W-0	R/W-0	R/W-0	R/W-0
	CHDSA<31:24>							
23:16	R/W-0	R/W-0	R/W-0	R/W-0	R/W-0	R/W-0	R/W-0	R/W-0
	CHDSA<23:16>							
15:8	R/W-0	R/W-0	R/W-0	R/W-0	R/W-0	R/W-0	R/W-0	R/W-0
	CHDSA<15:8>							
7:0	R/W-0	R/W-0	R/W-0	R/W-0	R/W-0	R/W-0	R/W-0	R/W-0
	CHDSA<7:0>							

Legend:			
R = Readable bit	W = Writable bit	U = Unimplemented bit, read as '0'	
-n = Value at POR	'1' = Bit is set	'0' = Bit is cleared	x = Bit is unknown

bit 31-0 **CHDSA<31:0>:** Channel Destination Start Address bits
Channel destination start address.
Note: This must be the physical address of the destination.

REGISTER 10-16: U1SOF: USB SOF THRESHOLD REGISTER

Bit Range	Bit 31/23/15/7	Bit 30/22/14/6	Bit 29/21/13/5	Bit 28/20/12/4	Bit 27/19/11/3	Bit 26/18/10/2	Bit 25/17/9/1	Bit 24/16/8/0
31:24	U-0	U-0	U-0	U-0	U-0	U-0	U-0	U-0
	—	—	—	—	—	—	—	—
23:16	U-0	U-0	U-0	U-0	U-0	U-0	U-0	U-0
	—	—	—	—	—	—	—	—
15:8	U-0	U-0	U-0	U-0	U-0	U-0	U-0	U-0
	—	—	—	—	—	—	—	—
7:0	R/W-0	R/W-0	R/W-0	R/W-0	R/W-0	R/W-0	R/W-0	R/W-0
	CNT<7:0>							

Legend:			
R = Readable bit	W = Writable bit	U = Unimplemented bit, read as ‘0’	
-n = Value at POR	‘1’ = Bit is set	‘0’ = Bit is cleared	x = Bit is unknown

bit 31-8 **Unimplemented:** Read as ‘0’

bit 7-0 **CNT<7:0>:** SOF Threshold Value bits
Typical values of the threshold are:
01001010 = 64-byte packet
00101010 = 32-byte packet
00011010 = 16-byte packet
00010010 = 8-byte packet

REGISTER 10-17: U1BDTP1: USB BUFFER DESCRIPTOR TABLE PAGE 1 REGISTER

Bit Range	Bit 31/23/15/7	Bit 30/22/14/6	Bit 29/21/13/5	Bit 28/20/12/4	Bit 27/19/11/3	Bit 26/18/10/2	Bit 25/17/9/1	Bit 24/16/8/0
31:24	U-0	U-0	U-0	U-0	U-0	U-0	U-0	U-0
	—	—	—	—	—	—	—	—
23:16	U-0	U-0	U-0	U-0	U-0	U-0	U-0	U-0
	—	—	—	—	—	—	—	—
15:8	U-0	U-0	U-0	U-0	U-0	U-0	U-0	U-0
	—	—	—	—	—	—	—	—
7:0	R/W-0	R/W-0	R/W-0	R/W-0	R/W-0	R/W-0	R/W-0	U-0
	BDTPTRL<15:9>							—

Legend:			
R = Readable bit	W = Writable bit	U = Unimplemented bit, read as ‘0’	
-n = Value at POR	‘1’ = Bit is set	‘0’ = Bit is cleared	x = Bit is unknown

bit 31-8 **Unimplemented:** Read as ‘0’

bit 7-1 **BDTPTRL<15:9>:** Buffer Descriptor Table Base Address bits
This 7-bit value provides address bits 15 through 9 of the Buffer Descriptor Table base address, which defines the starting location of the Buffer Descriptor Table in system memory.
The 32-bit Buffer Descriptor Table base address is 512-byte aligned.

bit 0 **Unimplemented:** Read as ‘0’

11.4 Ports Control Registers

TABLE 11-3: PORTA REGISTER MAP

Virtual Address (BF88_#)	Register Name(1)	Bit Range	Bits 31/15	30/14	29/13	28/12	27/11	26/10	25/9	24/8	23/7	22/6	21/5	20/4	19/3	18/2	17/1	16/0	All Resets
6000	ANSELA	31:16	—	—	—	—	—	—	—	—	—	—	—	—	—	—	—	—	0000
		15:0	—	—	—	—	—	—	—	—	—	—	—	—	—	—	ANSA1	ANSA0	0003
6010	TRISA	31:16	—	—	—	—	—	—	—	—	—	—	—	—	—	—	—	—	0000
		15:0	—	—	—	—	—	TRISA10(2)	TRISA9(2)	TRISA8(2)	TRISA7(2)	—	—	TRISA4	TRISA3	TRISA2	TRISA1	TRISA0	079F
6020	PORTA	31:16	—	—	—	—	—	—	—	—	—	—	—						0000
		15:0	—	—	—	—	—	RA10(2)	RA9(2)	RA8(2)	RA7(2)	—	—	RA4	RA3	RA2	RA1	RA0	xxxx
6030	LATA	31:16	—	—	—	—	—	—	—	—	—	—	—	—	—	—	—	—	0000
		15:0	—	—	—	—	—	LATA10(2)	LATA9(2)	LATA8(2)	LATA7(2)	—	—	LATA4	LATA3	LATA2	LATA1	LATA0	xxxx
6040	ODCA	31:16	—	—	—	—	—	—	—	—	—	—	—	—	—	—	—	—	0000
		15:0	—	—	—	—	—	ODCA10(2)	ODCA9(2)	ODCA8(2)	ODCA7(2)	—	—	ODCA4	ODCA3	ODCA2	ODCA1	ODCA0	0000
6050	CNPUA	31:16	—	—	—	—	—	—	—	—	—	—	—	—	—	—	—	—	0000
		15:0	—	—	—	—	—	CNPUA10(2)	CNPUA9(2)	CNPUA8(2)	CNPUA7(2)	—	—	CNPUA4	CNPUA3	CNPUA2	CNPUA1	CNPUA0	0000
6060	CNPDA	31:16	—	—	—	—	—	—	—	—	—	—	—	—	—	—	—	—	0000
		15:0	—	—	—	—	—	CNPDA10(2)	CNPDA9(2)	CNPDA8(2)	CNPDA7(2)	—	—	CNPDA4	CNPDA3	CNPDA2	CNPDA1	CNPDA0	0000
6070	CNCONA	31:16	—	—	—	—	—	—	—	—	—	—	—	—	—	—	—	—	0000
		15:0	ON	—	SIDL	—	—	—	—	—	—	—	—	—	—	—	—	—	0000
6080	CNENA	31:16	—	—	—	—	—	—	—	—	—	—	—	—	—	—	—	—	0000
		15:0	—	—	—	—	—	CNIEA10(2)	CNIEA9(2)	CNIEA8(2)	CNIEA7(2)	—	—	CNIEA4	CNIEA3	CNIEA2	CNIEA1	CNIEA0	0000
6090	CNSTATA	31:16	—	—	—	—	—	—	—	—	—	—	—	—	—	—	—	—	0000
		15:0	—	—	—	—	—	CNSTATA10(2)	CNSTATA9(2)	CNSTATA8(2)	CNSTATA7(2)	—	—	CNSTATA4	CNSTATA3	CNSTATA2	CNSTATA1	CNSTATA0	0000

Legend: x = unknown value on Reset; — = unimplemented, read as '0'. Reset values are shown in hexadecimal.

Note 1: All registers in this table have corresponding CLR, SET and INV registers at their virtual addresses, plus offsets of 0x4, 0x8 and 0xC, respectively. See **Section 11.2 "CLR, SET and INV Registers"** for more information.

2: This bit is only available on 44-pin devices.

© 2011-2016 Microchip Technology Inc.

TABLE 11-7: PERIPHERAL PIN SELECT OUTPUT REGISTER MAP

Virtual Address (BF80_#)	Register Name	Bit Range	Bits																All Resets
			31/15	30/14	29/13	28/12	27/11	26/10	25/9	24/8	23/7	22/6	21/5	20/4	19/3	18/2	17/1	16/0	
FB00	RPA0R	31:16	—	—	—	—	—	—	—	—	—	—	—	—	—	—	—	—	0000
		15:0	—	—	—	—	—	—	—	—	—	—	—	—	RPA0<3:0>				0000
FB04	RPA1R	31:16	—	—	—	—	—	—	—	—	—	—	—	—	—	—	—	—	0000
		15:0	—	—	—	—	—	—	—	—	—	—	—	—	RPA1<3:0>				0000
FB08	RPA2R	31:16	—	—	—	—	—	—	—	—	—	—	—	—	—	—	—	—	0000
		15:0	—	—	—	—	—	—	—	—	—	—	—	—	RPA2<3:0>				0000
FB0C	RPA3R	31:16	—	—	—	—	—	—	—	—	—	—	—	—	—	—	—	—	0000
		15:0	—	—	—	—	—	—	—	—	—	—	—	—	RPA3<3:0>				0000
FB10	RPA4R	31:16	—	—	—	—	—	—	—	—	—	—	—	—	—	—	—	—	0000
		15:0	—	—	—	—	—	—	—	—	—	—	—	—	RPA4<3:0>				0000
FB20	RPA8R(1)	31:16	—	—	—	—	—	—	—	—	—	—	—	—	—	—	—	—	0000
		15:0	—	—	—	—	—	—	—	—	—	—	—	—	RPA8<3:0>				0000
FB24	RPA9R(1)	31:16	—	—	—	—	—	—	—	—	—	—	—	—	—	—	—	—	0000
		15:0	—	—	—	—	—	—	—	—	—	—	—	—	RPA9<3:0>				0000
FB2C	RPB0R	31:16	—	—	—	—	—	—	—	—	—	—	—	—	—	—	—	—	0000
		15:0	—	—	—	—	—	—	—	—	—	—	—	—	RPB0<3:0>				0000
FB30	RPB1R	31:16	—	—	—	—	—	—	—	—	—	—	—	—	—	—	—	—	0000
		15:0	—	—	—	—	—	—	—	—	—	—	—	—	RPB1<3:0>				0000
FB34	RPB2R	31:16	—	—	—	—	—	—	—	—	—	—	—	—	—	—	—	—	0000
		15:0	—	—	—	—	—	—	—	—	—	—	—	—	RPB2<3:0>				0000
FB38	RPB3R	31:16	—	—	—	—	—	—	—	—	—	—	—	—	—	—	—	—	0000
		15:0	—	—	—	—	—	—	—	—	—	—	—	—	RPB3<3:0>				0000
FB3C	RPB4R	31:16	—	—	—	—	—	—	—	—	—	—	—	—	—	—	—	—	0000
		15:0	—	—	—	—	—	—	—	—	—	—	—	—	RPB4<3:0>				0000
FB40	RPB5R	31:16	—	—	—	—	—	—	—	—	—	—	—	—	—	—	—	—	0000
		15:0	—	—	—	—	—	—	—	—	—	—	—	—	RPB5<3:0>				0000
FB44	RPB6R(2)	31:16	—	—	—	—	—	—	—	—	—	—	—	—	—	—	—	—	0000
		15:0	—	—	—	—	—	—	—	—	—	—	—	—	RPB6<3:0>				0000
FB48	RPB7R	31:16	—	—	—	—	—	—	—	—	—	—	—	—	—	—	—	—	0000
		15:0	—	—	—	—	—	—	—	—	—	—	—	—	RPB7<3:0>				0000

Legend: x = unknown value on Reset; — = unimplemented, read as '0'. Reset values are shown in hexadecimal.

Note 1: This register is only available on 44-pin devices.
2: This register is only available on PIC32MX1XX devices.
3: This register is only available on 36-pin and 44-pin devices.

© 2011-2016 Microchip Technology Inc.

REGISTER 18-1: I2CxCON: I^{2}C CONTROL REGISTER

Bit Range	Bit 31/23/15/7	Bit 30/22/14/6	Bit 29/21/13/5	Bit 28/20/12/4	Bit 27/19/11/3	Bit 26/18/10/2	Bit 25/17/9/1	Bit 24/16/8/0
31:24	U-0	U-0	U-0	U-0	U-0	U-0	U-0	U-0
	—	—	—	—	—	—	—	—
23:16	U-0	U-0	U-0	U-0	U-0	U-0	U-0	U-0
	—	—	—	—	—	—	—	—
15:8	R/W-0	U-0	R/W-0	R/W-1, HC	R/W-0	R/W-0	R/W-0	R/W-0
	ON(1)	—	SIDL	SCLREL	STRICT	A10M	DISSLW	SMEN
7:0	R/W-0	R/W-0	R/W-0	R/W-0, HC	R/W-0, HC	R/W-0, HC	R/W-0, HC	R/W-0, HC
	GCEN	STREN	ACKDT	ACKEN	RCEN	PEN	RSEN	SEN

Legend:	HC = Cleared in Hardware		
R = Readable bit	W = Writable bit	U = Unimplemented bit, read as ‘0’	
-n = Value at POR	‘1’ = Bit is set	‘0’ = Bit is cleared	x = Bit is unknown

bit 31-16 **Unimplemented:** Read as ‘0’

bit 15 **ON:** I^{2}C Enable bit(1)
- 1 = Enables the I^{2}C module and configures the SDA and SCL pins as serial port pins
- 0 = Disables the I^{2}C module; all I^{2}C pins are controlled by PORT functions

bit 14 **Unimplemented:** Read as ‘0’

bit 13 **SIDL:** Stop in Idle Mode bit
- 1 = Discontinue module operation when the device enters Idle mode
- 0 = Continue module operation when the device enters Idle mode

bit 12 **SCLREL:** SCLx Release Control bit (when operating as I^{2}C slave)
- 1 = Release SCLx clock
- 0 = Hold SCLx clock low (clock stretch)

If STREN = 1:
Bit is R/W (i.e., software can write ‘0’ to initiate stretch and write ‘1’ to release clock). Hardware clear at beginning of slave transmission. Hardware clear at end of slave reception.

If STREN = 0:
Bit is R/S (i.e., software can only write ‘1’ to release clock). Hardware clear at beginning of slave transmission.

bit 11 **STRICT:** Strict I^{2}C Reserved Address Rule Enable bit
- 1 = Strict reserved addressing is enforced. Device does not respond to reserved address space or generate addresses in reserved address space.
- 0 = Strict I^{2}C Reserved Address Rule not enabled

bit 10 **A10M:** 10-bit Slave Address bit
- 1 = I2CxADD is a 10-bit slave address
- 0 = I2CxADD is a 7-bit slave address

bit 9 **DISSLW:** Disable Slew Rate Control bit
- 1 = Slew rate control disabled
- 0 = Slew rate control enabled

bit 8 **SMEN:** SMBus Input Levels bit
- 1 = Enable I/O pin thresholds compliant with SMBus specification
- 0 = Disable SMBus input thresholds

Note 1: When using 1:1 PBCLK divisor, the user’s software should not read/write the peripheral’s SFRs in the SYSCLK cycle immediately following the instruction that clears the module’s ON bit.

© 2011-2016 Microchip Technology Inc.

23.0 COMPARATOR

Note: This data sheet summarizes the features of the PIC32MX1XX/2XX 28/36/44-pin Family of devices. It is not intended to be a comprehensive reference source. To complement the information in this data sheet, refer to **Section 19. "Comparator"** (DS60001110), which is available from the *Documentation > Reference Manual* section of the Microchip PIC32 web site (www.microchip.com/pic32).

The Analog Comparator module contains three comparators that can be configured in a variety of ways.

Following are some of the key features of this module:

- Selectable inputs available include:
  - Analog inputs multiplexed with I/O pins
  - On-chip internal absolute voltage reference (IVREF)
  - Comparator voltage reference (CVREF)
- Outputs can be Inverted
- Selectable interrupt generation

A block diagram of the comparator module is provided in Figure 23-1.

FIGURE 23-1: COMPARATOR BLOCK DIAGRAM

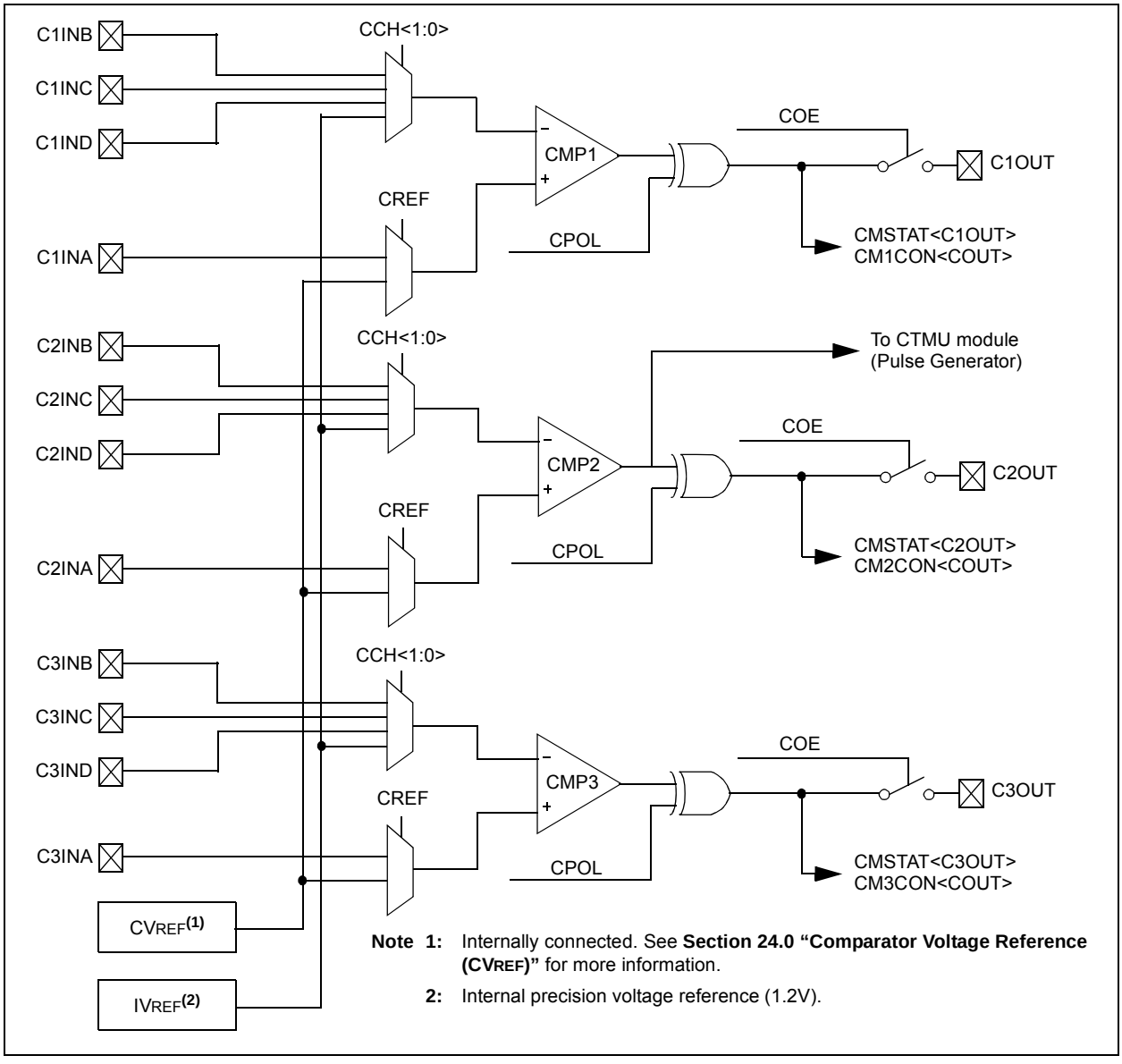

Note 1: Internally connected. See **Section 24.0 "Comparator Voltage Reference (CVREF)"** for more information.

2: Internal precision voltage reference (1.2V).

27.3 On-Chip Voltage Regulator

All PIC32MX1XX/2XX 28/36/44-pin Family devices' core and digital logic are designed to operate at a nominal 1.8V. To simplify system designs, most devices in the PIC32MX1XX/2XX 28/36/44-pin Family family incorporate an on-chip regulator providing the required core logic voltage from VDD.

A low-ESR capacitor (such as tantalum) must be connected to the VCAP pin (see Figure 27-1). This helps to maintain the stability of the regulator. The recommended value for the filter capacitor is provided in **Section 30.1 "DC Characteristics"**.

Note:	It is important that the low-ESR capacitor is placed as close as possible to the VCAP pin.

27.3.1 ON-CHIP REGULATOR AND POR

It takes a fixed delay for the on-chip regulator to generate an output. During this time, designated as TPU, code execution is disabled. TPU is applied every time the device resumes operation after any power-down, including Sleep mode.

27.3.2 ON-CHIP REGULATOR AND BOR

PIC32MX1XX/2XX 28/36/44-pin Family devices also have a simple brown-out capability. If the voltage supplied to the regulator is inadequate to maintain a regulated level, the regulator Reset circuitry will generate a Brown-out Reset. This event is captured by the BOR flag bit (RCON<1>). The brown-out voltage levels are specific in **Section 30.1 "DC Characteristics"**.

FIGURE 27-1: CONNECTIONS FOR THE ON-CHIP REGULATOR

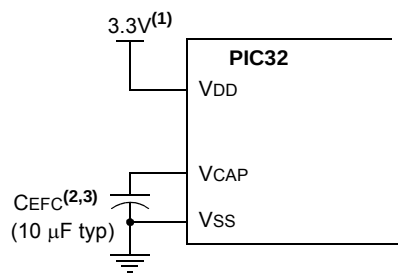

Note 1: These are typical operating voltages. Refer to **Section 30.1 "DC Characteristics"** for the full operating ranges of VDD.
2: It is important that the low-ESR capacitor is placed as close as possible to the VCAP pin.
3: The typical voltage on the VCAP pin is 1.8V.

27.4 Programming and Diagnostics

PIC32MX1XX/2XX 28/36/44-pin Family devices provide a complete range of programming and diagnostic features that can increase the flexibility of any application using them. These features allow system designers to include:

- Simplified field programmability using two-wire In-Circuit Serial Programming™ (ICSP™) interfaces
- Debugging using ICSP
- Programming and debugging capabilities using the EJTAG extension of JTAG
- JTAG boundary scan testing for device and board diagnostics

PIC32 devices incorporate two programming and diagnostic modules, and a trace controller, that provide a range of functions to the application developer.

Figure 27-2 illustrates a block diagram of the programming, debugging, and trace ports.

FIGURE 27-2: BLOCK DIAGRAM OF PROGRAMMING, DEBUGGING AND TRACE PORTS

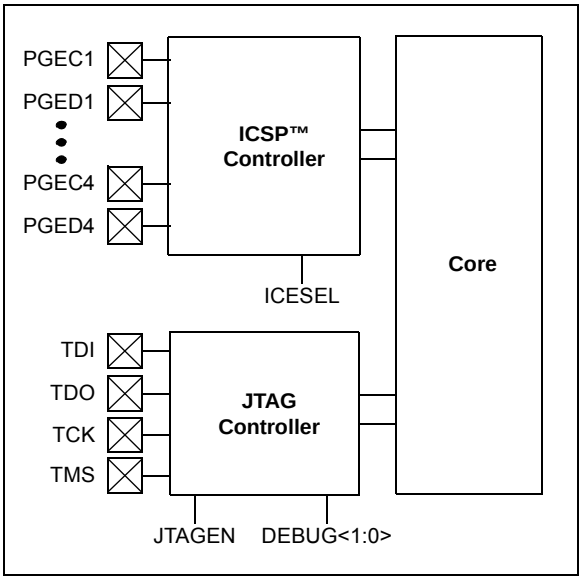

© 2011-2016 Microchip Technology Inc.

29.0 DEVELOPMENT SUPPORT

The PIC® microcontrollers (MCU) and dsPIC® digital signal controllers (DSC) are supported with a full range of software and hardware development tools:

- Integrated Development Environment
  - MPLAB® X IDE Software
- Compilers/Assemblers/Linkers
  - MPLAB XC Compiler
  - MPASM™ Assembler
  - MPLINK™ Object Linker/ MPLIB™ Object Librarian
  - MPLAB Assembler/Linker/Librarian for Various Device Families
- Simulators
  - MPLAB X SIM Software Simulator
- Emulators
  - MPLAB REAL ICE™ In-Circuit Emulator
- In-Circuit Debuggers/Programmers
  - MPLAB ICD 3
  - PICkit™ 3
- Device Programmers
  - MPLAB PM3 Device Programmer
- Low-Cost Demonstration/Development Boards, Evaluation Kits and Starter Kits
- Third-party development tools

29.1 MPLAB X Integrated Development Environment Software

The MPLAB X IDE is a single, unified graphical user interface for Microchip and third-party software, and hardware development tool that runs on Windows®, Linux and Mac OS® X. Based on the NetBeans IDE, MPLAB X IDE is an entirely new IDE with a host of free software components and plug-ins for high-performance application development and debugging. Moving between tools and upgrading from software simulators to hardware debugging and programming tools is simple with the seamless user interface.

With complete project management, visual call graphs, a configurable watch window and a feature-rich editor that includes code completion and context menus, MPLAB X IDE is flexible and friendly enough for new users. With the ability to support multiple tools on multiple projects with simultaneous debugging, MPLAB X IDE is also suitable for the needs of experienced users.

Feature-Rich Editor:

- Color syntax highlighting
- Smart code completion makes suggestions and provides hints as you type
- Automatic code formatting based on user-defined rules
- Live parsing

User-Friendly, Customizable Interface:

- Fully customizable interface: toolbars, toolbar buttons, windows, window placement, etc.
- Call graph window

Project-Based Workspaces:

- Multiple projects
- Multiple tools
- Multiple configurations
- Simultaneous debugging sessions

File History and Bug Tracking:

- Local file history feature
- Built-in support for Bugzilla issue tracker

30.1 DC Characteristics

TABLE 30-1: OPERATING MIPS VS. VOLTAGE

Characteristic	V_{DD} Range (in Volts)(1)	Temp. Range (in °C)	Max. Frequency
			PIC32MX1XX/2XX 28/36/44-pin Family
DC5	2.3-3.6V	-40°C to +85°C	40 MHz
DC5b	2.3-3.6V	-40°C to +105°C	40 MHz

Note 1: Overall functional device operation at $V_{BORMIN} < V_{DD} < V_{DDMIN}$ is tested, but not characterized. All device Analog modules, such as ADC, etc., will function, but with degraded performance below V_{DDMIN}. Refer to parameter BO10 in Table 30-11 for BOR values.

TABLE 30-2: THERMAL OPERATING CONDITIONS

Rating	Symbol	Min.	Typical	Max.	Unit
Industrial Temperature Devices					
Operating Junction Temperature Range	T_J	-40	—	+125	°C
Operating Ambient Temperature Range	T_A	-40	—	+85	°C
V-temp Temperature Devices					
Operating Junction Temperature Range	T_J	-40	—	+140	°C
Operating Ambient Temperature Range	T_A	-40	—	+105	°C
Power Dissipation: Internal Chip Power Dissipation: $P_{INT} = V_{DD} \times (I_{DD} - S\ I_{OH})$ I/O Pin Power Dissipation: $I/O = S\ (\{V_{DD} - V_{OH}\} \times I_{OH}) + S\ (V_{OL} \times I_{OL})$	P_D	$P_{INT} + P_{I/O}$			W
Maximum Allowed Power Dissipation	P_{DMAX}	$(T_J - T_A)/\theta_{JA}$			W

TABLE 30-3: THERMAL PACKAGING CHARACTERISTICS

Characteristics	Symbol	Typical	Max.	Unit	Notes
Package Thermal Resistance, 28-pin SSOP	θ_{JA}	71	—	°C/W	**1**
Package Thermal Resistance, 28-pin SOIC	θ_{JA}	50	—	°C/W	**1**
Package Thermal Resistance, 28-pin SPDIP	θ_{JA}	42	—	°C/W	**1**
Package Thermal Resistance, 28-pin QFN	θ_{JA}	35	—	°C/W	**1**
Package Thermal Resistance, 36-pin VTLA	θ_{JA}	31	—	°C/W	**1**
Package Thermal Resistance, 44-pin QFN	θ_{JA}	32	—	°C/W	**1**
Package Thermal Resistance, 44-pin TQFP	θ_{JA}	45	—	°C/W	**1**
Package Thermal Resistance, 44-pin VTLA	θ_{JA}	30	—	°C/W	**1**

Note 1: Junction to ambient thermal resistance, Theta-JA (θ_{JA}) numbers are achieved by package simulations.

© 2011-2016 Microchip Technology Inc.

TABLE 30-13: COMPARATOR SPECIFICATIONS

DC CHARACTERISTICS			Standard Operating Conditions (see Note 4): 2.3V to 3.6V (unless otherwise stated) Operating temperature -40°C ≤ TA ≤ +85°C for Industrial -40°C ≤ TA ≤ +105°C for V-temp				
Param. No.	**Symbol**	**Characteristics**	**Min.**	**Typical**	**Max.**	**Units**	**Comments**
D300	VIOFF	Input Offset Voltage	—	±7.5	±25	mV	AVDD = VDD, AVSS = VSS
D301	VICM	Input Common Mode Voltage	0	—	VDD	V	AVDD = VDD, AVSS = VSS **(Note 2)**
D302	CMRR	Common Mode Rejection Ratio	55	—	—	dB	Max VICM = (VDD - 1)V **(Note 2)**
D303A	TRESP	Large Signal Response Time	—	150	400	ns	AVDD = VDD, AVSS = VSS **(Note 1,2)**
D303B	TSRESP	Small Signal Response Time	—	1	—	μs	This is defined as an input step of 50 mV with 15 mV of overdrive **(Note 2)**
D304	ON2OV	Comparator Enabled to Output Valid	—	—	10	μs	Comparator module is configured before setting the comparator ON bit **(Note 2)**
D305	IVREF	Internal Voltage Reference	1.14	1.2	1.26	V	—
D312	TSET	Internal Comparator Voltage DRC Reference Setting time	—	—	10	μs	**(Note 3)**

Note 1: Response time measured with one comparator input at (VDD – 1.5)/2, while the other input transitions from VSS to VDD.

2: These parameters are characterized but not tested.

3: Settling time measured while CVRR = 1 and CVR<3:0> transitions from ‘0000’ to ‘1111’. This parameter is characterized, but not tested in manufacturing.

4: The Comparator module is functional at VBORMIN < VDD < VDDMIN, but with degraded performance. Unless otherwise stated, module functionality is tested, but not characterized.

TABLE 30-35: 10-BIT CONVERSION RATE PARAMETERS

AC CHARACTERISTICS(2)			Standard Operating Conditions (see Note 3): 2.5V to 3.6V (unless otherwise stated) Operating temperature -40°C ≤ TA ≤ +85°C for Industrial -40°C ≤ TA ≤ +105°C for V-temp		
ADC Speed	**TAD Min.**	**Sampling Time Min.**	**RS Max.**	**VDD**	**ADC Channels Configuration**
1 Msps to 400 ksps(1)	65 ns	132 ns	500Ω	3.0V to 3.6V	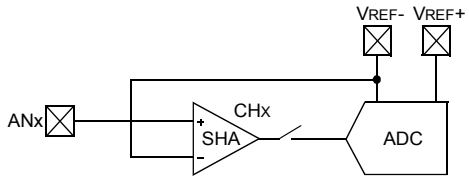
Up to 400 ksps	200 ns	200 ns	5.0 kΩ	2.5V to 3.6V	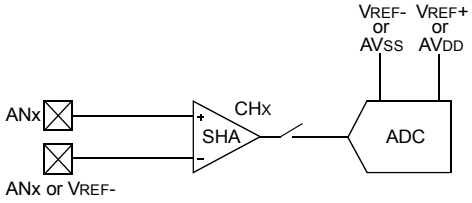

Note 1: External VREF- and VREF+ pins must be used for correct operation.

2: These parameters are characterized, but not tested in manufacturing.

3: The ADC module is functional at VBORMIN < VDD < 2.5V, but with degraded performance. Unless otherwise stated, module functionality is tested, but not characterized.

31.0 50 MHz ELECTRICAL CHARACTERISTICS

This section provides an overview of the PIC32MX1XX/2XX 28/36/44-pin Family electrical characteristics for devices operating at 50 MHz.

The specifications for 50 MHz are identical to those shown in **Section 30.0 "Electrical Characteristics"**, with the exception of the parameters listed in this chapter.

Parameters in this chapter begin with the letter "M", which denotes 50 MHz operation. For example, parameter DC29a in **Section 30.0 "Electrical Characteristics"**, is the up to 40 MHz operation equivalent for MDC29a.

Absolute maximum ratings for the PIC32MX1XX/2XX 28/36/44-pin Family 50 MHz devices are listed below. Exposure to these maximum rating conditions for extended periods may affect device reliability. Functional operation of the device at these or any other conditions, above the parameters indicated in the operation listings of this specification, is not implied.

Absolute Maximum Ratings

(See Note 1)

Ambient temperature under bias ..... -40°C to +85°C
Storage temperature ..... -65°C to +150°C
Voltage on V_{DD} with respect to V_{SS} ..... -0.3V to +4.0V
Voltage on any pin that is not 5V tolerant, with respect to V_{SS} **(Note 3)** ..... -0.3V to (V_{DD} + 0.3V)
Voltage on any 5V tolerant pin with respect to V_{SS} when $V_{DD} \geq 2.3V$ **(Note 3)** ..... -0.3V to +5.5V
Voltage on any 5V tolerant pin with respect to V_{SS} when $V_{DD} < 2.3V$ **(Note 3)** ..... -0.3V to +3.6V
Voltage on D+ or D- pin with respect to V_{USB3V3} ..... -0.3V to (V_{USB3V3} + 0.3V)
Voltage on V_{BUS} with respect to V_{SS} ..... -0.3V to +5.5V
Maximum current out of V_{SS} pin(s) ..... 300 mA
Maximum current into V_{DD} pin(s) **(Note 2)** ..... 300 mA
Maximum output current sunk by any I/O pin ..... 15 mA
Maximum output current sourced by any I/O pin ..... 15 mA
Maximum current sunk by all ports ..... 200 mA
Maximum current sourced by all ports **(Note 2)** ..... 200 mA

Note 1: Stresses above those listed under **"Absolute Maximum Ratings"** may cause permanent damage to the device. This is a stress rating only and functional operation of the device at those or any other conditions, above those indicated in the operation listings of this specification, is not implied. Exposure to maximum rating conditions for extended periods may affect device reliability.

2: Maximum allowable current is a function of device maximum power dissipation (see Table 30-2).

3: See the **"Pin Diagrams"** section for the 5V tolerant pins.

33.2 Package Details

This section provides the technical details of the packages.

28-Lead Plastic Shrink Small Outline (SS) – 5.30 mm Body [SSOP]

Note: For the most current package drawings, please see the Microchip Packaging Specification located at http://www.microchip.com/packaging

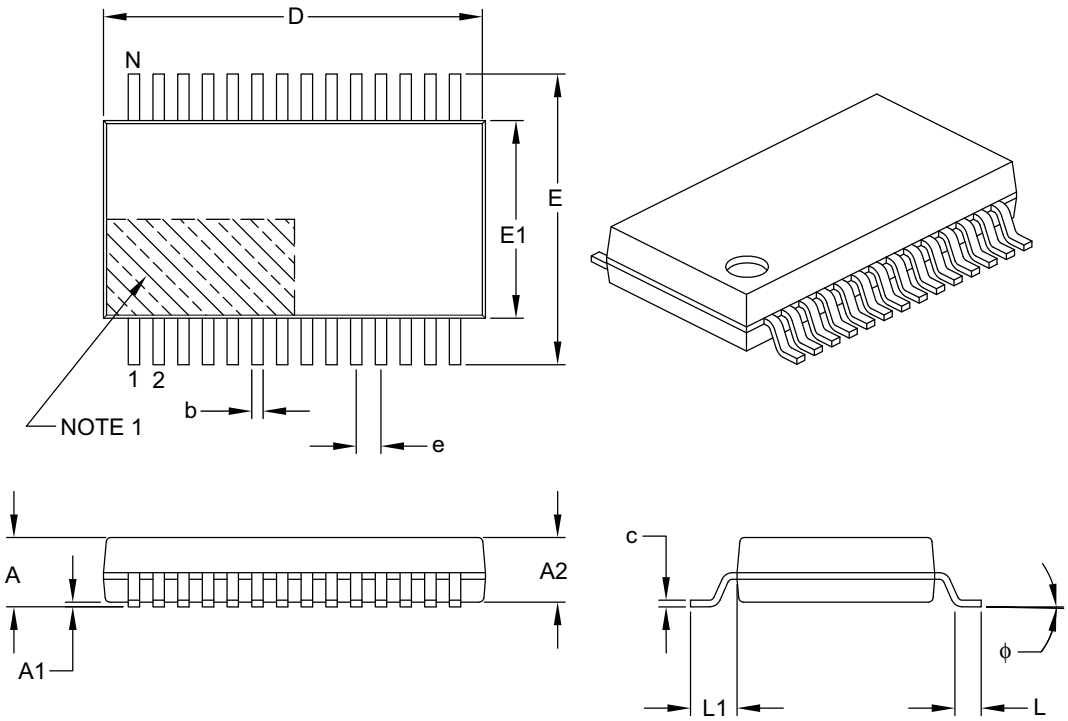

Units		MILLIMETERS		
Dimension Limits		MIN	NOM	MAX
Number of Pins	N	28		
Pitch	e	0.65 BSC		
Overall Height	A	–	–	2.00
Molded Package Thickness	A2	1.65	1.75	1.85
Standoff	A1	0.05	–	–
Overall Width	E	7.40	7.80	8.20
Molded Package Width	E1	5.00	5.30	5.60
Overall Length	D	9.90	10.20	10.50
Foot Length	L	0.55	0.75	0.95
Footprint	L1	1.25 REF		
Lead Thickness	c	0.09	–	0.25
Foot Angle	ϕ	0°	4°	8°
Lead Width	b	0.22	–	0.38

Notes:

1. Pin 1 visual index feature may vary, but must be located within the hatched area.
2. Dimensions D and E1 do not include mold flash or protrusions. Mold flash or protrusions shall not exceed 0.20 mm per side.
3. Dimensioning and tolerancing per ASME Y14.5M.

   BSC: Basic Dimension. Theoretically exact value shown without tolerances.
   REF: Reference Dimension, usually without tolerance, for information purposes only.

Microchip Technology Drawing C04-073B