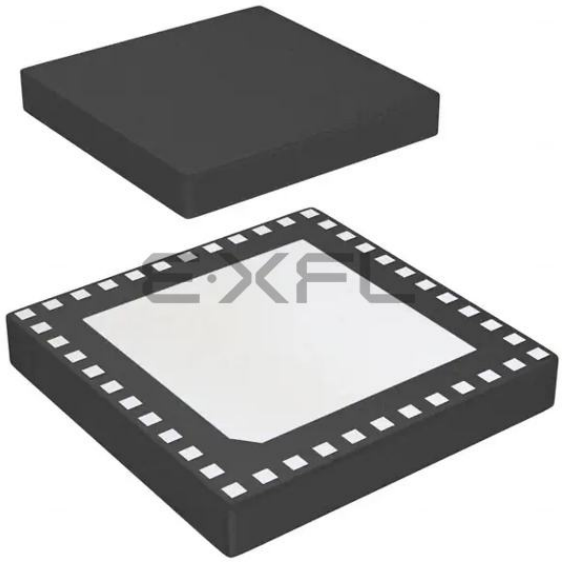

Welcome to E-XFL.COM

What is "Embedded - Microcontrollers"?

"Embedded - Microcontrollers" refer to small, integrated circuits designed to perform specific tasks within larger systems. These microcontrollers are essentially compact computers on a single chip, containing a processor core, memory, and programmable input/output peripherals. They are called "embedded" because they are embedded within electronic devices to control various functions, rather than serving as standalone computers. Microcontrollers are crucial in modern electronics, providing the intelligence and control needed for a wide range of applications.

Applications of "Embedded - Microcontrollers"

Details	
Product Status	Obsolete
Core Processor	MIPS32® M4K™
Core Size	32-Bit Single-Core
Speed	40MHz
Connectivity	I²C, IrDA, LINbus, PMP, SPI, UART/USART, USB OTG
Peripherals	Brown-out Detect/Reset, DMA, I²S, POR, PWM, WDT
Number of I/O	33
Program Memory Size	64KB (64K x 8)
Program Memory Type	FLASH
EEPROM Size	-
RAM Size	16K x 8
Voltage - Supply (Vcc/Vdd)	2.3V ~ 3.6V
Data Converters	A/D 13x10b
Oscillator Type	Internal
Operating Temperature	-40°C ~ 85°C (TA)
Mounting Type	Surface Mount
Package / Case	44-VFTLA Exposed Pad
Supplier Device Package	44-VTLA (6x6)
Purchase URL	https://www.e-xfl.com/product-detail/microchip-technology/pic32mx230f064d-i-tl

TABLE 7: PIN NAMES FOR 36-PIN GENERAL PURPOSE DEVICES

36-PIN VTLA (TOP VIEW)(1,2,3,5)

PIC32MX110F016C
PIC32MX120F032C
PIC32MX130F064C
PIC32MX150F128C

36

1

Pin #	Full Pin Name	Pin #	Full Pin Name
1	AN4/C1INB/C2IND/RPB2/SDA2/CTED13/RB2	19	TDO/RPB9/SDA1/CTED4/PMD3/RB9
2	AN5/C1INA/C2INC/RTCC/RPB3/SCL2/RB3	20	RPC9/CTED7/RC9
3	PGED4(4)/AN6/RPC0/RC0	21	VSS
4	PGEC4(4)/AN7/RPC1/RC1	22	VCAP
5	VDD	23	VDD
6	VSS	24	PGED2/RPB10/CTED11/PMD2/RB10
7	OSC1/CLKI/RPA2/RA2	25	PGEC2/TMS/RPB11/PMD1/RB11
8	OSC2/CLKO/RPA3/PMA0/RA3	26	AN12/PMD0/RB12
9	SOSCI/RPB4/RB4	27	AN11/RPB13/CTPLS/PMRD/RB13
10	SOSCO/RPA4/T1CK/CTED9/PMA1/RA4	28	CVREFOUT/AN10/C3INB/RPB14/SCK1/CTED5/PMWR/RB14
11	RPC3/RC3	29	AN9/C3INA/RPB15/SCK2/CTED6/PMCS1/RB15
12	VSS	30	AVSS
13	VDD	31	AVDD
14	VDD	32	$\overline{\text{MCLR}}$
15	PGED3/RPB5/PMD7/RB5	33	VREF+/CVREF+/AN0/C3INC/RPA0/CTED1/RA0
16	PGEC3/RPB6/PMD6/RB6	34	VREF-/CVREF-/AN1/RPA1/CTED2/RA1
17	TDI/RPB7/CTED3/PMD5/INT0/RB7	35	PGED1/AN2/C1IND/C2INB/C3IND/RPB0/RB0
18	TCK/RPB8/SCL1/CTED10/PMD4/RB8	36	PGEC1/AN3/C1INC/C2INA/RPB1/CTED12/RB1

Note 1: The RPn pins can be used by remappable peripherals. See Table 1 for the available peripherals and **Section 11.3 "Peripheral Pin Select"** for restrictions.
2: Every I/O port pin (RAx-RCx) can be used as a change notification pin (CNAx-CNCx). See **Section 11.0 "I/O Ports"** for more information.
3: The metal plane at the bottom of the device is not connected to any pins and is recommended to be connected to VSS externally.
4: This pin function is not available on PIC32MX110F016C and PIC32MX120F032C devices.
5: Shaded pins are 5V tolerant.

© 2011-2016 Microchip Technology Inc.

TABLE 8: PIN NAMES FOR 36-PIN USB DEVICES

36-PIN VTLA (TOP VIEW)(1,2,3,5)

PIC32MX210F016C
PIC32MX220F032C
PIC32MX230F064C
PIC32MX250F128C

36

1

Pin #	Full Pin Name	Pin #	Full Pin Name
1	AN4/C1INB/C2IND/RPB2/SDA2/CTED13/PMD2/RB2	19	TDO/RPB9/SDA1/CTED4/PMD3/RB9
2	AN5/C1INA/C2INC/RTCC/RPB3/SCL2/PMWR/RB3	20	RPC9/CTED7/RC9
3	PGED4(4)/AN6/RPC0/RC0	21	VSS
4	PGEC4(4)/AN7/RPC1/RC1	22	VCAP
5	VDD	23	VDD
6	VSS	24	PGED2/RPB10/D+/CTED11/RB10
7	OSC1/CLKI/RPA2/RA2	25	PGEC2/RPB11/D-/RB11
8	OSC2/CLKO/RPA3/PMA0/RA3	26	VUSB3V3
9	SOSCI/RPB4/RB4	27	AN11/RPB13/CTPLS/PMRD/RB13
10	SOSCO/RPA4/T1CK/CTED9/PMA1/RA4	28	CVREFOUT/AN10/C3INB/RPB14/VBUSON/SCK1/CTED5/RB14
11	AN12/RPC3/RC3	29	AN9/C3INA/RPB15/SCK2/CTED6/PMCS1/RB15
12	VSS	30	AVSS
13	VDD	31	AVDD
14	VDD	32	$\overline{\text{MCLR}}$
15	TMS/RPB5/USBID/RB5	33	PGED3/VREF+/CVREF+/AN0/C3INC/RPA0/CTED1/PMD7/RA0
16	VBUS	34	PGEC3/VREF-/CVREF-/AN1/RPA1/CTED2/PMD6/RA1
17	TDI/RPB7/CTED3/PMD5/INT0/RB7	35	PGED1/AN2/C1IND/C2INB/C3IND/RPB0/PMD0/RB0
18	TCK/RPB8/SCL1/CTED10/PMD4/RB8	36	PGEC1/AN3/C1INC/C2INA/RPB1/CTED12/PMD1/RB1

Note 1: The RPn pins can be used by remappable peripherals. See Table 1 for the available peripherals and **Section 11.3 "Peripheral Pin Select"** for restrictions.
2: Every I/O port pin (RAx-RCx) can be used as a change notification pin (CNAx-CNCx). See **Section 11.0 "I/O Ports"** for more information.
3: The metal plane at the bottom of the device is not connected to any pins and is recommended to be connected to VSS externally.
4: This pin function is not available on PIC32MX210F016C and PIC32MX120F032C devices.
5: Shaded pins are 5V tolerant.

TABLE 9: PIN NAMES FOR 44-PIN GENERAL PURPOSE DEVICES

44-PIN QFN (TOP VIEW)(1,2,3,5)

PIC32MX110F016D
PIC32MX120F032D
PIC32MX130F064D
PIC32MX130F256D
PIC32MX150F128D
PIC32MX170F256D

44 1

Pin #	Full Pin Name	Pin #	Full Pin Name
1	RPB9/SDA1/CTED4/PMD3/RB9	23	AN4/C1INB/C2IND/RPB2/SDA2/CTED13/RB2
2	RPC6/PMA1/RC6	24	AN5/C1INA/C2INC/RTCC/RPB3/SCL2/RB3
3	RPC7/PMA0/RC7	25	AN6/RPC0/RC0
4	RPC8/PMA5/RC8	26	AN7/RPC1/RC1
5	RPC9/CTED7/PMA6/RC9	27	AN8/RPC2/PMA2/RC2
6	VSS	28	VDD
7	VCAP	29	VSS
8	PGED2/RPB10/CTED11/PMD2/RB10	30	OSC1/CLKI/RPA2/RA2
9	PGEC2/RPB11/PMD1/RB11	31	OSC2/CLKO/RPA3/RA3
10	AN12/PMD0/RB12	32	TDO/RPA8/PMA8/RA8
11	AN11/RPB13/CTPLS/PMRD/RB13	33	SOSCI/RPB4/RB4
12	PGED4(4)/TMS/PMA10/RA10	34	SOSCO/RPA4/T1CK/CTED9/RA4
13	PGEC4(4)/TCK/CTED8/PMA7/RA7	35	TDI/RPA9/PMA9/RA9
14	CVREFOUT/AN10/C3INB/RPB14/SCK1/CTED5/PMWR/RB14	36	RPC3/RC3
15	AN9/C3INA/RPB15/SCK2/CTED6/PMCS1/RB15	37	RPC4/PMA4/RC4
16	AVSS	38	RPC5/PMA3/RC5
17	AVDD	39	VSS
18	$\overline{\text{MCLR}}$	40	VDD
19	VREF+/CVREF+/AN0/C3INC/RPA0/CTED1/RA0	41	PGED3/RPB5/PMD7/RB5
20	VREF-/CVREF-/AN1/RPA1/CTED2/RA1	42	PGEC3/RPB6/PMD6/RB6
21	PGED1/AN2/C1IND/C2INB/C3IND/RPB0/RB0	43	RPB7/CTED3/PMD5/INT0/RB7
22	PGEC1/AN3/C1INC/C2INA/RPB1/CTED12/RB1	44	RPB8/SCL1/CTED10/PMD4/RB8

Note 1: The RPn pins can be used by remappable peripherals. See Table 1 for the available peripherals and **Section 11.3 "Peripheral Pin Select"** for restrictions.
2: Every I/O port pin (RAx-RCx) can be used as a change notification pin (CNAx-CNCx). See **Section 11.0 "I/O Ports"** for more information.
3: The metal plane at the bottom of the device is not connected to any pins and is recommended to be connected to VSS externally.
4: This pin function is not available on PIC32MX110F016D and PIC32MX120F032D devices.
5: Shaded pins are 5V tolerant.

© 2011-2016 Microchip Technology Inc.

5.1 Flash Controller Control Registers

TABLE 5-1: FLASH CONTROLLER REGISTER MAP

Virtual Address (BF80_#)	Register Name	Bit Range	Bits																All Resets
			31/15	30/14	29/13	28/12	27/11	26/10	25/9	24/8	23/7	22/6	21/5	20/4	19/3	18/2	17/1	16/0	
F400	NVMCON(1)	31:16	—	—	—	—	—	—	—	—	—	—	—	—	—	—	—	—	0000
		15:0	WR	WREN	WRERR	LVDERR	LVDSTAT	—	—	—	—	—	—	—	NVMOP<3:0>				0000
F410	NVMKEY	31:16	NVMKEY<31:0>																0000
		15:0																	0000
F420	NVMADDR(1)	31:16	NVMADDR<31:0>																0000
		15:0																	0000
F430	NVMDATA	31:16	NVMDATA<31:0>																0000
		15:0																	0000
F440	NVMSRCADDR	31:16	NVMSRCADDR<31:0>																0000
		15:0																	0000

Legend: x = unknown value on Reset; — = unimplemented, read as ‘0’. Reset values are shown in hexadecimal.

Note 1: This register has corresponding CLR, SET and INV registers at its virtual address, plus offsets of 0x4, 0x8 and 0xC, respectively. See **Section 11.2 “CLR, SET and INV Registers”** for more information.

© 2011-2016 Microchip Technology Inc.

TABLE 7-2: INTERRUPT REGISTER MAP (CONTINUED)

Virtual Address (BF88_#)	Register Name(1)	Bit Range	Bits																All Resets
			31/15	30/14	29/13	28/12	27/11	26/10	25/9	24/8	23/7	22/6	21/5	20/4	19/3	18/2	17/1	16/0	
1100	IPC7	31:16	—	—	—	SPI1IP<2:0>			SPI1IS<1:0>		—	—	—	USBIP<2:0>(2)			USBIS<1:0>(2)		0000
		15:0	—	—	—	CMP3IP<2:0>			CMP3IS<1:0>		—	—	—	CMP2IP<2:0>			CMP2IS<1:0>		0000
1110	IPC8	31:16	—	—	—	PMPIP<2:0>			PMPIS<1:0>		—	—	—	CNIP<2:0>			CNIS<1:0>		0000
		15:0	—	—	—	I2C1IP<2:0>			I2C1IS<1:0>		—	—	—	U1IP<2:0>			U1IS<1:0>		0000
1120	IPC9	31:16	—	—	—	CTMUIP<2:0>			CTMUIS<1:0>		—	—	—	I2C2IP<2:0>			I2C2IS<1:0>		0000
		15:0	—	—	—	U2IP<2:0>			U2IS<1:0>		—	—	—	SPI2IP<2:0>			SPI2IS<1:0>		0000
1130	IPC10	31:16	—	—	—	DMA3IP<2:0>			DMA3IS<1:0>		—	—	—	DMA2IP<2:0>			DMA2IS<1:0>		0000
		15:0	—	—	—	DMA1IP<2:0>			DMA1IS<1:0>		—	—	—	DMA0IP<2:0>			DMA0IS<1:0>		0000

Legend: x = unknown value on Reset; — = unimplemented, read as '0'. Reset values are shown in hexadecimal.

Note 1: With the exception of those noted, all registers in this table have corresponding CLR, SET and INV registers at their virtual addresses, plus offsets of 0x4 0x8 and 0xC, respectively. See **Section 11.2 "CLR, SET and INV Registers"** for more information.

2: These bits are not available on PIC32MX1XX devices.

3: This register does not have associated CLR, SET, INV registers.

© 2011-2016 Microchip Technology Inc.

REGISTER 8-2: OSCTUN: FRC TUNING REGISTER

Bit Range	Bit 31/23/15/7	Bit 30/22/14/6	Bit 29/21/13/5	Bit 28/20/12/4	Bit 27/19/11/3	Bit 26/18/10/2	Bit 25/17/9/1	Bit 24/16/8/0
31:24	U-0	U-0	U-0	U-0	U-0	U-0	U-0	U-0
	—	—	—	—	—	—	—	—
23:16	U-0	R-0	U-0	U-0	U-0	U-0	U-0	U-0
	—	—	—	—	—	—	—	—
15:8	U-0	R-0	U-0	U-0	U-0	U-0	U-0	U-0
	—	—	—	—	—	—	—	—
7:0	U-0	U-0	R/W-0	R/W-0	R/W-0	R/W-0	R/W-0	R/W-0
	—	—	TUN<5:0>(1)					

Legend:			
R = Readable bit	W = Writable bit	U = Unimplemented bit, read as ‘0’	
-n = Value at POR	‘1’ = Bit is set	‘0’ = Bit is cleared	x = Bit is unknown

bit 31-6 **Unimplemented:** Read as ‘0’

bit 5-0 **TUN<5:0>:** FRC Oscillator Tuning bits(1)

100000 = Center frequency -12.5%
100001 =
•
•
•
111111 =
000000 = Center frequency. Oscillator runs at minimal frequency (8 MHz)
000001 =
•
•
•
011110 =
011111 = Center frequency +12.5%

Note 1: OSCTUN functionality has been provided to help customers compensate for temperature effects on the FRC frequency over a wide range of temperatures. The tuning step size is an approximation, and is neither characterized, nor tested.

Note: Writes to this register require an unlock sequence. Refer to **Section 6. “Oscillator”** (DS60001112) in the *“PIC32 Family Reference Manual”* for details.

REGISTER 9-9: DCHxINT: DMA CHANNEL 'x' INTERRUPT CONTROL REGISTER

Bit Range	Bit 31/23/15/7	Bit 30/22/14/6	Bit 29/21/13/5	Bit 28/20/12/4	Bit 27/19/11/3	Bit 26/18/10/2	Bit 25/17/9/1	Bit 24/16/8/0
31:24	U-0	U-0	U-0	U-0	U-0	U-0	U-0	U-0
	—	—	—	—	—	—	—	—
23:16	R/W-0	R/W-0	R/W-0	R/W-0	R/W-0	R/W-0	R/W-0	R/W-0
	CHSDIE	CHSHIE	CHDDIE	CHDHIE	CHBCIE	CHCCIE	CHTAIE	CHERIE
15:8	U-0	U-0	U-0	U-0	U-0	U-0	U-0	U-0
	—	—	—	—	—	—	—	—
7:0	R/W-0	R/W-0	R/W-0	R/W-0	R/W-0	R/W-0	R/W-0	R/W-0
	CHSDIF	CHSHIF	CHDDIF	CHDHIF	CHBCIF	CHCCIF	CHTAIF	CHERIF

Legend:			
R = Readable bit	W = Writable bit	U = Unimplemented bit, read as '0'	
-n = Value at POR	'1' = Bit is set	'0' = Bit is cleared	x = Bit is unknown

bit 31-24 **Unimplemented:** Read as '0'

bit 23 **CHSDIE:** Channel Source Done Interrupt Enable bit
1 = Interrupt is enabled
0 = Interrupt is disabled

bit 22 **CHSHIE:** Channel Source Half Empty Interrupt Enable bit
1 = Interrupt is enabled
0 = Interrupt is disabled

bit 21 **CHDDIE:** Channel Destination Done Interrupt Enable bit
1 = Interrupt is enabled
0 = Interrupt is disabled

bit 20 **CHDHIE:** Channel Destination Half Full Interrupt Enable bit
1 = Interrupt is enabled
0 = Interrupt is disabled

bit 19 **CHBCIE:** Channel Block Transfer Complete Interrupt Enable bit
1 = Interrupt is enabled
0 = Interrupt is disabled

bit 18 **CHCCIE:** Channel Cell Transfer Complete Interrupt Enable bit
1 = Interrupt is enabled
0 = Interrupt is disabled

bit 17 **CHTAIE:** Channel Transfer Abort Interrupt Enable bit
1 = Interrupt is enabled
0 = Interrupt is disabled

bit 16 **CHERIE:** Channel Address Error Interrupt Enable bit
1 = Interrupt is enabled
0 = Interrupt is disabled

bit 15-8 **Unimplemented:** Read as '0'

bit 7 **CHSDIF:** Channel Source Done Interrupt Flag bit
1 = Channel Source Pointer has reached end of source (CHSPTR = CHSSIZ)
0 = No interrupt is pending

bit 6 **CHSHIF:** Channel Source Half Empty Interrupt Flag bit
1 = Channel Source Pointer has reached midpoint of source (CHSPTR = CHSSIZ/2)
0 = No interrupt is pending

bit 5 **CHDDIF:** Channel Destination Done Interrupt Flag bit
1 = Channel Destination Pointer has reached end of destination (CHDPTR = CHDSIZ)
0 = No interrupt is pending

TABLE 10-1: USB REGISTER MAP (CONTINUED)

Virtual Address (BF88_#)	Register Name(1)	Bit Range	Bits																All Resets
			31/15	30/14	29/13	28/12	27/11	26/10	25/9	24/8	23/7	22/6	21/5	20/4	19/3	18/2	17/1	16/0	
5390	U1EP9	31:16	—	—	—	—	—	—	—	—	—	—	—	—	—	—	—	—	0000
		15:0	—	—	—	—	—	—	—	—	—	—	—	EPCONDIS	EPRXEN	EPTXEN	EPSTALL	EPHSHK	0000
53A0	U1EP10	31:16	—	—	—	—	—	—	—	—	—	—	—	—	—	—	—	—	0000
		15:0	—	—	—	—	—	—	—	—	—	—	—	EPCONDIS	EPRXEN	EPTXEN	EPSTALL	EPHSHK	0000
53B0	U1EP11	31:16	—	—	—	—	—	—	—	—	—	—	—	—	—	—	—	—	0000
		15:0	—	—	—	—	—	—	—	—	—	—	—	EPCONDIS	EPRXEN	EPTXEN	EPSTALL	EPHSHK	0000
53C0	U1EP12	31:16	—	—	—	—	—	—	—	—	—	—	—	—	—	—	—	—	0000
		15:0	—	—	—	—	—	—	—	—	—	—	—	EPCONDIS	EPRXEN	EPTXEN	EPSTALL	EPHSHK	0000
53D0	U1EP13	31:16	—	—	—	—	—	—	—	—	—	—	—	—	—	—	—	—	0000
		15:0	—	—	—	—	—	—	—	—	—	—	—	EPCONDIS	EPRXEN	EPTXEN	EPSTALL	EPHSHK	0000
53E0	U1EP14	31:16	—	—	—	—	—	—	—	—	—	—	—	—	—	—	—	—	0000
		15:0	—	—	—	—	—	—	—	—	—	—	—	EPCONDIS	EPRXEN	EPTXEN	EPSTALL	EPHSHK	0000
53F0	U1EP15	31:16	—	—	—	—	—	—	—	—	—	—	—	—	—	—	—	—	0000
		15:0	—	—	—	—	—	—	—	—	—	—	—	EPCONDIS	EPRXEN	EPTXEN	EPSTALL	EPHSHK	0000

Legend: x = unknown value on Reset; — = unimplemented, read as '0'. Reset values are shown in hexadecimal.

Note 1: With the exception of those noted, all registers in this table (except as noted) have corresponding CLR, SET and INV registers at their virtual address, plus an offset of 0x4, 0x8, and 0xC respectively. See **Section 11.2 "CLR, SET and INV Registers"** for more information.

2: This register does not have associated SET and INV registers.

3: This register does not have associated CLR, SET and INV registers.

4: Reset value for this bit is undefined.

© 2011-2016 Microchip Technology Inc.

11.1 Parallel I/O (PIO) Ports

All port pins have 10 registers directly associated with their operation as digital I/O. The data direction register (TRISx) determines whether the pin is an input or an output. If the data direction bit is a '1', then the pin is an input. All port pins are defined as inputs after a Reset. Reads from the latch (LATx) read the latch. Writes to the latch write the latch. Reads from the port (PORTx) read the port pins, while writes to the port pins write the latch.

11.1.1 OPEN-DRAIN CONFIGURATION

In addition to the PORTx, LATx, and TRISx registers for data control, some port pins can also be individually configured for either digital or open-drain output. This is controlled by the Open-Drain Control register, ODCx, associated with each port. Setting any of the bits configures the corresponding pin to act as an open-drain output.

The open-drain feature allows the generation of outputs higher than VDD (e.g., 5V) on any desired 5V-tolerant pins by using external pull-up resistors. The maximum open-drain voltage allowed is the same as the maximum VIH specification.

See the **"Pin Diagrams"** section for the available pins and their functionality.

11.1.2 CONFIGURING ANALOG AND DIGITAL PORT PINS

The ANSELx register controls the operation of the analog port pins. The port pins that are to function as analog inputs must have their corresponding ANSEL and TRIS bits set. In order to use port pins for I/O functionality with digital modules, such as Timers, UARTs, etc., the corresponding ANSELx bit must be cleared.

The ANSELx register has a default value of 0xFFFF; therefore, all pins that share analog functions are analog (not digital) by default.

If the TRIS bit is cleared (output) while the ANSELx bit is set, the digital output level (VOH or VOL) is converted by an analog peripheral, such as the ADC module or Comparator module.

When the PORT register is read, all pins configured as analog input channels are read as cleared (a low level).

Pins configured as digital inputs do not convert an analog input. Analog levels on any pin defined as a digital input (including the ANx pins) can cause the input buffer to consume current that exceeds the device specifications.

11.1.3 I/O PORT WRITE/READ TIMING

One instruction cycle is required between a port direction change or port write operation and a read operation of the same port. Typically this instruction would be a NOP.

11.1.4 INPUT CHANGE NOTIFICATION

The input change notification function of the I/O ports allows the PIC32MX1XX/2XX 28/36/44-pin Family devices to generate interrupt requests to the processor in response to a change-of-state on selected input pins. This feature can detect input change-of-states even in Sleep mode, when the clocks are disabled. Every I/O port pin can be selected (enabled) for generating an interrupt request on a change-of-state.

Five control registers are associated with the CN functionality of each I/O port. The CNENx registers contain the CN interrupt enable control bits for each of the input pins. Setting any of these bits enables a CN interrupt for the corresponding pins.

The CNSTATx register indicates whether a change occurred on the corresponding pin since the last read of the PORTx bit.

Each I/O pin also has a weak pull-up and a weak pull-down connected to it. The pull-ups act as a current source or sink source connected to the pin, and eliminate the need for external resistors when push-button or keypad devices are connected. The pull-ups and pull-downs are enabled separately using the CNPUx and the CNPDx registers, which contain the control bits for each of the pins. Setting any of the control bits enables the weak pull-ups and/or pull-downs for the corresponding pins.

Note:	Pull-ups and pull-downs on change notification pins should always be disabled when the port pin is configured as a digital output.

An additional control register (CNCONx) is shown in Register 11-3.

11.2 CLR, SET and INV Registers

Every I/O module register has a corresponding CLR (clear), SET (set) and INV (invert) register designed to provide fast atomic bit manipulations. As the name of the register implies, a value written to a SET, CLR or INV register effectively performs the implied operation, but only on the corresponding base register and only bits specified as '1' are modified. Bits specified as '0' are not modified.

Reading SET, CLR and INV registers returns undefined values. To see the affects of a write operation to a SET, CLR, or INV register, the base register must be read.

© 2011-2016 Microchip Technology Inc.

12.0 TIMER1

Note: This data sheet summarizes the features of the PIC32MX1XX/2XX 28/36/44-pin Family of devices. It is not intended to be a comprehensive reference source. To complement the information in this data sheet, refer to **Section 14. "Timers"** (DS60001105), which is available from the *Documentation > Reference Manual* section of the Microchip PIC32 web site (www.microchip.com/pic32).

This family of PIC32 devices features one synchronous/asynchronous 16-bit timer that can operate as a free-running interval timer for various timing applications and counting external events. This timer can also be used with the Low-Power Secondary Oscillator (SOSC) for Real-Time Clock (RTC) applications.

The following modes are supported:

- Synchronous Internal Timer
- Synchronous Internal Gated Timer
- Synchronous External Timer
- Asynchronous External Timer

12.1 Additional Supported Features

- Selectable clock prescaler
- Timer operation during CPU Idle and Sleep mode
- Fast bit manipulation using CLR, SET and INV registers
- Asynchronous mode can be used with the SOSC to function as a Real-Time Clock (RTC)

Figure 12-1 illustrates a general block diagram of Timer1.

FIGURE 12-1: TIMER1 BLOCK DIAGRAM

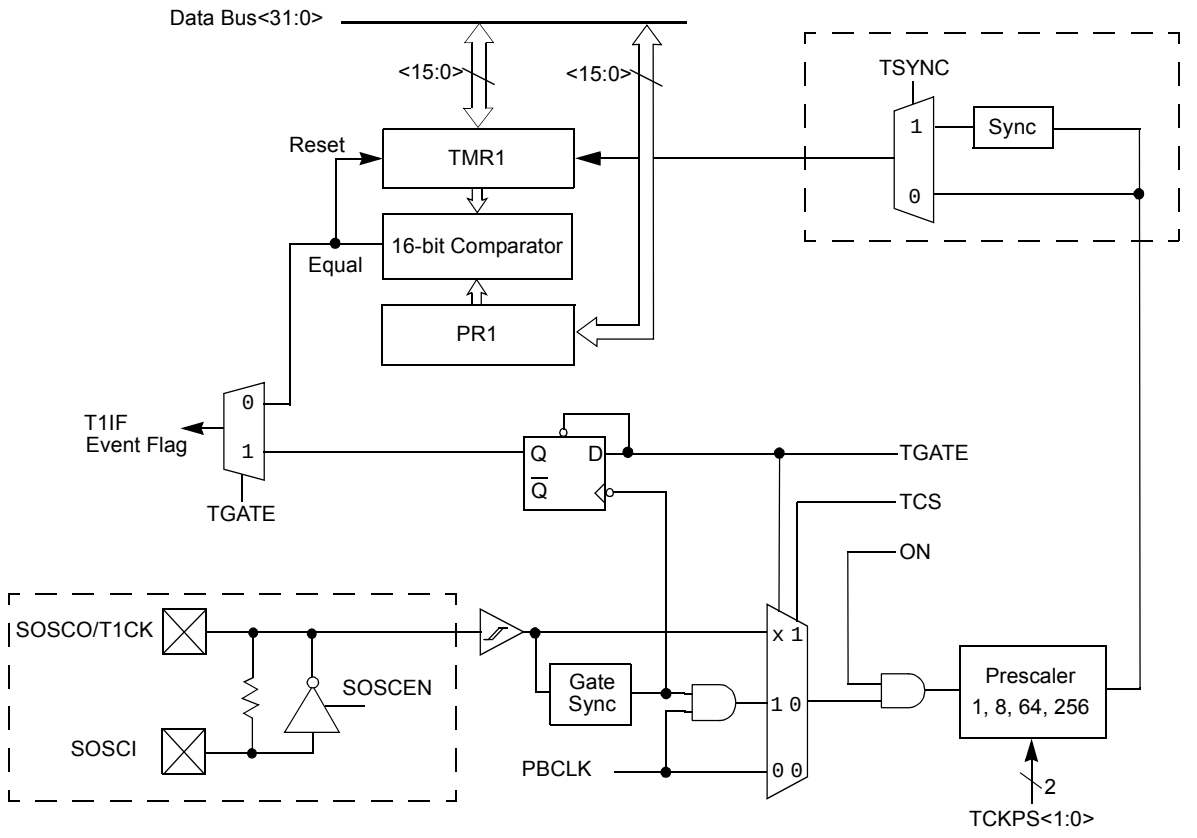

Note: The default state of the SOSCEN (OSCCON<1>) bit during a device Reset is controlled by the FSOSCEN bit in Configuration Word, DEVCFG1.

16.0 OUTPUT COMPARE

Note: This data sheet summarizes the features of the PIC32MX1XX/2XX 28/36/44-pin Family of devices. It is not intended to be a comprehensive reference source. To complement the information in this data sheet, refer to **Section 16. "Output Compare"** (DS60001111), which is available from the *Documentation > Reference Manual* section of the Microchip PIC32 web site (www.microchip.com/pic32).

The Output Compare module is used to generate a single pulse or a train of pulses in response to selected time base events. For all modes of operation, the Output Compare module compares the values stored in the OCxR and/or the OCxRS registers to the value in the selected timer. When a match occurs, the Output Compare module generates an event based on the selected mode of operation.

The following are some of the key features:

- Multiple Output Compare Modules in a device
- Programmable interrupt generation on compare event
- Single and Dual Compare modes
- Single and continuous output pulse generation
- Pulse-Width Modulation (PWM) mode
- Hardware-based PWM Fault detection and automatic output disable
- Can operate from either of two available 16-bit time bases or a single 32-bit time base

FIGURE 16-1: OUTPUT COMPARE MODULE BLOCK DIAGRAM

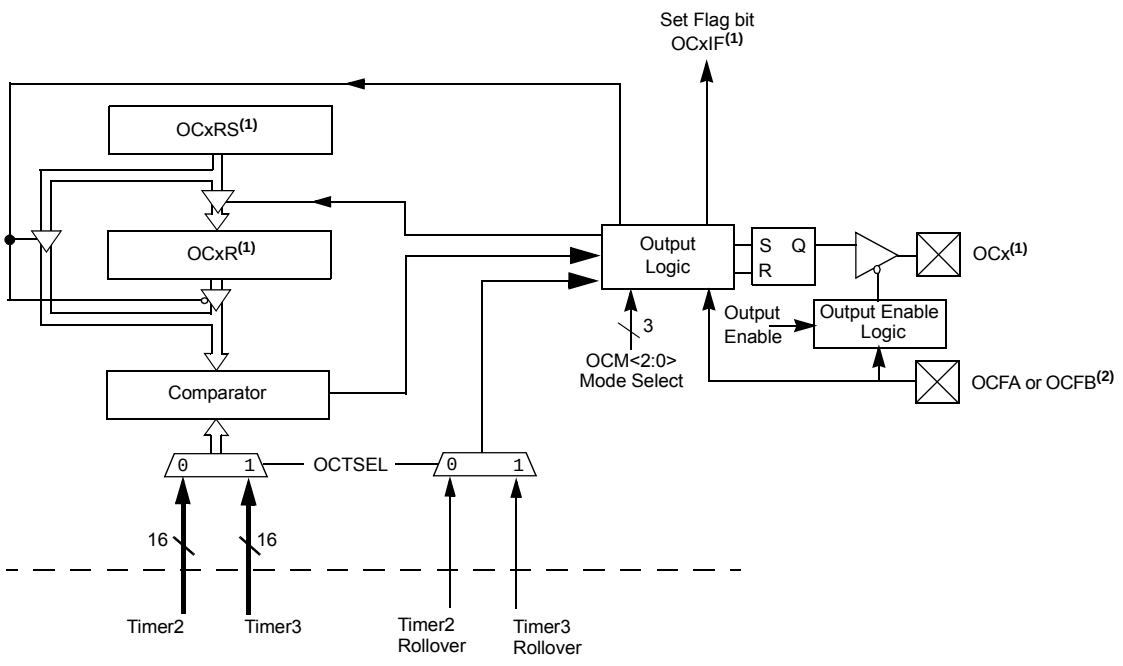

Note 1: Where 'x' is shown, reference is made to the registers associated with the respective output compare channels, 1 through 5.

2: The OCFA pin controls the OC1-OC4 channels. The OCFB pin controls the OC5 channel.

REGISTER 18-2: I2CxSTAT: I^{2}C STATUS REGISTER (CONTINUED)

bit 4 **P:** Stop bit
1 = Indicates that a Stop bit has been detected last
0 = Stop bit was not detected last
Hardware set or clear when Start, Repeated Start or Stop detected.

bit 3 **S:** Start bit
1 = Indicates that a Start (or Repeated Start) bit has been detected last
0 = Start bit was not detected last
Hardware set or clear when Start, Repeated Start or Stop detected.

bit 2 **R_W:** Read/Write Information bit (when operating as I^{2}C slave)
1 = Read – indicates data transfer is output from slave
0 = Write – indicates data transfer is input to slave
Hardware set or clear after reception of I^{2}C device address byte.

bit 1 **RBF:** Receive Buffer Full Status bit
1 = Receive complete, I2CxRCV is full
0 = Receive not complete, I2CxRCV is empty
Hardware set when I2CxRCV is written with received byte. Hardware clear when software reads I2CxRCV.

bit 0 **TBF:** Transmit Buffer Full Status bit
1 = Transmit in progress, I2CxTRN is full
0 = Transmit complete, I2CxTRN is empty
Hardware set when software writes I2CxTRN. Hardware clear at completion of data transmission.

REGISTER 22-1: AD1CON1: ADC CONTROL REGISTER 1

Bit Range	Bit 31/23/15/7	Bit 30/22/14/6	Bit 29/21/13/5	Bit 28/20/12/4	Bit 27/19/11/3	Bit 26/18/10/2	Bit 25/17/9/1	Bit 24/16/8/0
31:24	U-0	U-0	U-0	U-0	U-0	U-0	U-0	U-0
	—	—	—	—	—	—	—	—
23:16	U-0	U-0	U-0	U-0	U-0	U-0	U-0	U-0
	—	—	—	—	—	—	—	—
15:8	R/W-0	U-0	R/W-0	U-0	U-0	R/W-0	R/W-0	R/W-0
	ON(1)	—	SIDL	—	—	FORM<2:0>		
7:0	R/W-0	R/W-0	R/W-0	R/W-0	U-0	R/W-0	R/W-0, HSC	R/C-0, HSC
	SSRC<2:0>			CLRASAM	—	ASAM	SAMP(2)	DONE(3)

Legend:			
R = Readable bit	W = Writable bit	U = Unimplemented bit, read as ‘0’	
-n = Value at POR	‘1’ = Bit is set	‘0’ = Bit is cleared	x = Bit is unknown

bit 31-16 **Unimplemented:** Read as ‘0’

bit 15 **ON:** ADC Operating Mode bit(1)
- 1 = ADC module is operating
- 0 = ADC module is not operating

bit 14 **Unimplemented:** Read as ‘0’

bit 13 **SIDL:** Stop in Idle Mode bit
- 1 = Discontinue module operation when device enters Idle mode
- 0 = Continue module operation when the device enters Idle mode

bit 12-11 **Unimplemented:** Read as ‘0’

bit 10-8 **FORM<2:0>:** Data Output Format bits
- 111 = Signed Fractional 32-bit (DOUT = sddd dddd dd00 0000 0000 0000 0000)
- 110 = Fractional 32-bit (DOUT = dddd dddd dd00 0000 0000 0000 0000 0000)
- 101 = Signed Integer 32-bit (DOUT = ssss ssss ssss ssss ssss sssd dddd dddd)
- 100 = Integer 32-bit (DOUT = 0000 0000 0000 0000 0000 00dd dddd dddd)
- 011 = Signed Fractional 16-bit (DOUT = 0000 0000 0000 0000 sddd dddd dd00 0000)
- 010 = Fractional 16-bit (DOUT = 0000 0000 0000 0000 dddd dddd dd00 0000)
- 001 = Signed Integer 16-bit (DOUT = 0000 0000 0000 0000 ssss sssd dddd dddd)
- 000 =Integer 16-bit (DOUT = 0000 0000 0000 0000 0000 00dd dddd dddd)

bit 7-5 **SSRC<2:0>:** Conversion Trigger Source Select bits
- 111 = Internal counter ends sampling and starts conversion (auto convert)
- 110 = Reserved
- 101 = Reserved
- 100 = Reserved
- 011 = CTMU ends sampling and starts conversion
- 010 = Timer 3 period match ends sampling and starts conversion
- 001 = Active transition on INT0 pin ends sampling and starts conversion
- 000 = Clearing SAMP bit ends sampling and starts conversion

Note 1: When using 1:1 PBCLK divisor, the user’s software should not read/write the peripheral’s SFRs in the SYSCLK cycle immediately following the instruction that clears the module’s ON bit.

2: If ASAM = 0, software can write a ‘1’ to start sampling. This bit is automatically set by hardware if ASAM = 1. If SSRC = 0, software can write a ‘0’ to end sampling and start conversion. If SSRC ≠ ‘0’, this bit is automatically cleared by hardware to end sampling and start conversion.

3: This bit is automatically set by hardware when analog-to-digital conversion is complete. Software can write a ‘0’ to clear this bit (a write of ‘1’ is not allowed). Clearing this bit does not affect any operation already in progress. This bit is automatically cleared by hardware at the start of a new conversion.

REGISTER 27-4: DEVCFG3: DEVICE CONFIGURATION WORD 3

Bit Range	Bit 31/23/15/7	Bit 30/22/14/6	Bit 29/21/13/5	Bit 28/20/12/4	Bit 27/19/11/3	Bit 26/18/10/2	Bit 25/17/9/1	Bit 24/16/8/0
31:24	R/P	R/P	R/P	R/P	r-1	r-1	r-1	r-1
	FVBUSONIO	FUSBIDIO	IOL1WAY	PMDL1WAY	—	—	—	—
23:16	r-1	r-1	r-1	r-1	r-1	r-1	r-1	r-1
	—	—	—	—	—	—	—	—
15:8	R/P	R/P	R/P	R/P	R/P	R/P	R/P	R/P
	USERID<15:8>							
7:0	R/P	R/P	R/P	R/P	R/P	R/P	R/P	R/P
	USERID<7:0>							

Legend:	r = Reserved bit	P = Programmable bit	
R = Readable bit	W = Writable bit	U = Unimplemented bit, read as ‘0’	
-n = Value at POR	‘1’ = Bit is set	‘0’ = Bit is cleared	x = Bit is unknown

bit 31 **FVBUSONIO:** USB VBUSON Selection bit
1 = VBUSON pin is controlled by the USB module
0 = VBUSON pin is controlled by the port function

bit 30 **FUSBIDIO:** USB USBID Selection bit
1 = USBID pin is controlled by the USB module
0 = USBID pin is controlled by the port function

bit 29 **IOL1WAY:** Peripheral Pin Select Configuration bit
1 = Allow only one reconfiguration
0 = Allow multiple reconfigurations

bit 28 **PMDl1WAY:** Peripheral Module Disable Configuration bit
1 = Allow only one reconfiguration
0 = Allow multiple reconfigurations

bit 27-16 **Reserved:** Write ‘1’

bit 15-0 **USERID<15:0>:** User ID bits
This is a 16-bit value that is user-defined and is readable via ICSP™ and JTAG.

REGISTER 27-6: DEVID: DEVICE AND REVISION ID REGISTER

Bit Range	Bit 31/23/15/7	Bit 30/22/14/6	Bit 29/21/13/5	Bit 28/20/12/4	Bit 27/19/11/3	Bit 26/18/10/2	Bit 25/17/9/1	Bit 24/16/8/0
31:24	R	R	R	R	R	R	R	R
	VER<3:0>(1)				DEVID<27:24>(1)			
23:16	R	R	R	R	R	R	R	R
	DEVID<23:16>(1)							
15:8	R	R	R	R	R	R	R	R
	DEVID<15:8>(1)							
7:0	R	R	R	R	R	R	R	R
	DEVID<7:0>(1)							

Legend:			
R = Readable bit	W = Writable bit	U = Unimplemented bit, read as ‘0’	
-n = Value at POR	‘1’ = Bit is set	‘0’ = Bit is cleared	x = Bit is unknown

bit 31-28 **VER<3:0>:** Revision Identifier bits(1)

bit 27-0 **DEVID<27:0>:** Device ID bits(1)

Note 1: See the *“PIC32 Flash Programming Specification”* (DS60001145) for a list of Revision and Device ID values.

27.3 On-Chip Voltage Regulator

All PIC32MX1XX/2XX 28/36/44-pin Family devices' core and digital logic are designed to operate at a nominal 1.8V. To simplify system designs, most devices in the PIC32MX1XX/2XX 28/36/44-pin Family family incorporate an on-chip regulator providing the required core logic voltage from VDD.

A low-ESR capacitor (such as tantalum) must be connected to the VCAP pin (see Figure 27-1). This helps to maintain the stability of the regulator. The recommended value for the filter capacitor is provided in **Section 30.1 "DC Characteristics"**.

Note:	It is important that the low-ESR capacitor is placed as close as possible to the VCAP pin.

27.3.1 ON-CHIP REGULATOR AND POR

It takes a fixed delay for the on-chip regulator to generate an output. During this time, designated as TPU, code execution is disabled. TPU is applied every time the device resumes operation after any power-down, including Sleep mode.

27.3.2 ON-CHIP REGULATOR AND BOR

PIC32MX1XX/2XX 28/36/44-pin Family devices also have a simple brown-out capability. If the voltage supplied to the regulator is inadequate to maintain a regulated level, the regulator Reset circuitry will generate a Brown-out Reset. This event is captured by the BOR flag bit (RCON<1>). The brown-out voltage levels are specific in **Section 30.1 "DC Characteristics"**.

FIGURE 27-1: CONNECTIONS FOR THE ON-CHIP REGULATOR

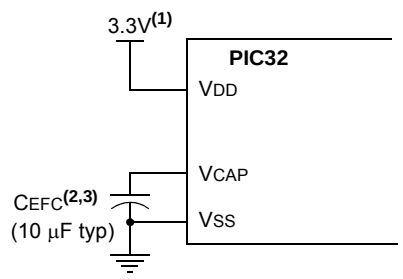

Note 1: These are typical operating voltages. Refer to **Section 30.1 "DC Characteristics"** for the full operating ranges of VDD.
2: It is important that the low-ESR capacitor is placed as close as possible to the VCAP pin.
3: The typical voltage on the VCAP pin is 1.8V.

27.4 Programming and Diagnostics

PIC32MX1XX/2XX 28/36/44-pin Family devices provide a complete range of programming and diagnostic features that can increase the flexibility of any application using them. These features allow system designers to include:

- Simplified field programmability using two-wire In-Circuit Serial Programming™ (ICSP™) interfaces
- Debugging using ICSP
- Programming and debugging capabilities using the EJTAG extension of JTAG
- JTAG boundary scan testing for device and board diagnostics

PIC32 devices incorporate two programming and diagnostic modules, and a trace controller, that provide a range of functions to the application developer.

Figure 27-2 illustrates a block diagram of the programming, debugging, and trace ports.

FIGURE 27-2: BLOCK DIAGRAM OF PROGRAMMING, DEBUGGING AND TRACE PORTS

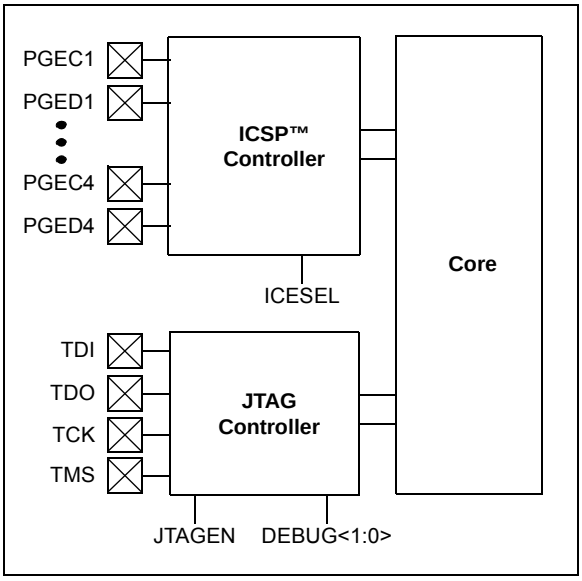

© 2011-2016 Microchip Technology Inc.

FIGURE 30-8: OUTPUT COMPARE MODULE (OCx) TIMING CHARACTERISTICS

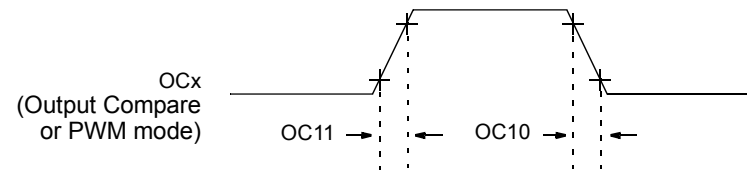

Note: Refer to Figure 30-1 for load conditions.

TABLE 30-26: OUTPUT COMPARE MODULE TIMING REQUIREMENTS

AC CHARACTERISTICS			Standard Operating Conditions: 2.3V to 3.6V (unless otherwise stated) Operating temperature -40°C ≤ TA ≤ +85°C for Industrial -40°C ≤ TA ≤ +105°C for V-temp				
Param. No.	**Symbol**	**Characteristics(1)**	**Min.**	**Typical(2)**	**Max.**	**Units**	**Conditions**
OC10	TCCF	OCx Output Fall Time	—	—	—	ns	See parameter DO32
OC11	TCCR	OCx Output Rise Time	—	—	—	ns	See parameter DO31

Note 1: These parameters are characterized, but not tested in manufacturing.

2: Data in “Typical” column is at 3.3V, 25°C unless otherwise stated. Parameters are for design guidance only and are not tested.

FIGURE 30-9: OCx/PWM MODULE TIMING CHARACTERISTICS

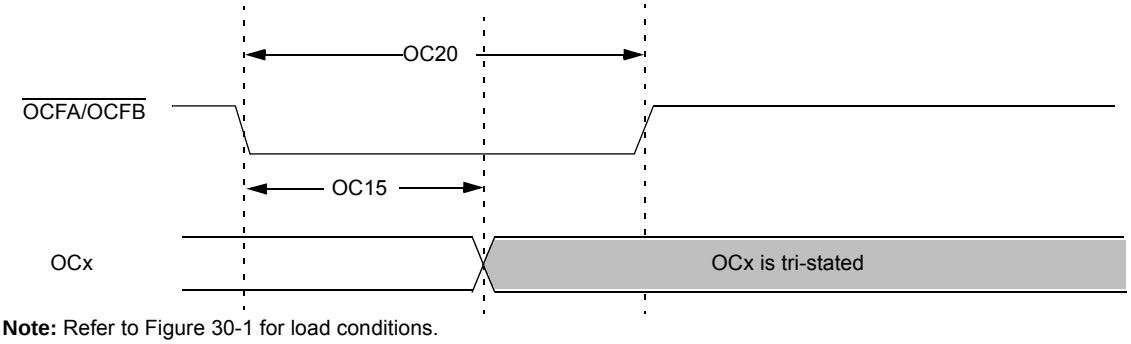

Note: Refer to Figure 30-1 for load conditions.

TABLE 30-27: SIMPLE OCx/PWM MODE TIMING REQUIREMENTS

AC CHARACTERISTICS			Standard Operating Conditions: 2.3V to 3.6V (unless otherwise stated) Operating temperature -40°C ≤ TA ≤ +85°C for Industrial -40°C ≤ TA ≤ +105°C for V-temp				
Param No.	**Symbol**	**Characteristics(1)**	**Min**	**Typical(2)**	**Max**	**Units**	**Conditions**
OC15	TFD	Fault Input to PWM I/O Change	—	—	50	ns	—
OC20	TFLT	Fault Input Pulse Width	50	—	—	ns	—

Note 1: These parameters are characterized, but not tested in manufacturing.

2: Data in “Typical” column is at 3.3V, 25°C unless otherwise stated. Parameters are for design guidance only and are not tested.

33.0 PACKAGING INFORMATION

33.1 Package Marking Information

28-Lead SOIC

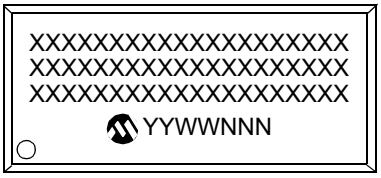

Example

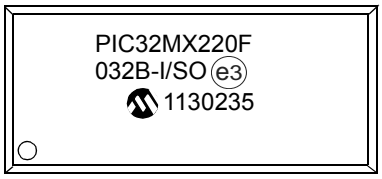

28-Lead SPDIP

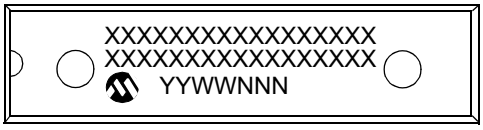

Example

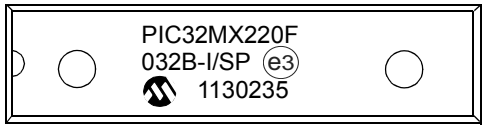

28-Lead SSOP

Example

28-Lead QFN

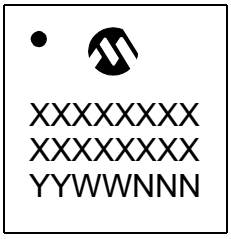

Example

Legend:	XX...X	Customer-specific information
	Y	Year code (last digit of calendar year)
	YY	Year code (last 2 digits of calendar year)
	WW	Week code (week of January 1 is week ‘01’)
	NNN	Alphanumeric traceability code
	e3	Pb-free JEDEC designator for Matte Tin (Sn)
	*	This package is Pb-free. The Pb-free JEDEC designator (e3) can be found on the outer packaging for this package.
Note:	If the full Microchip part number cannot be marked on one line, it is carried over to the next line, thus limiting the number of available characters for customer-specific information.	

44-Lead Plastic Thin Quad Flatpack (PT) 10X10X1 mm Body, 2.00 mm Footprint [TQFP]

Note: For the most current package drawings, please see the Microchip Packaging Specification located at http://www.microchip.com/packaging

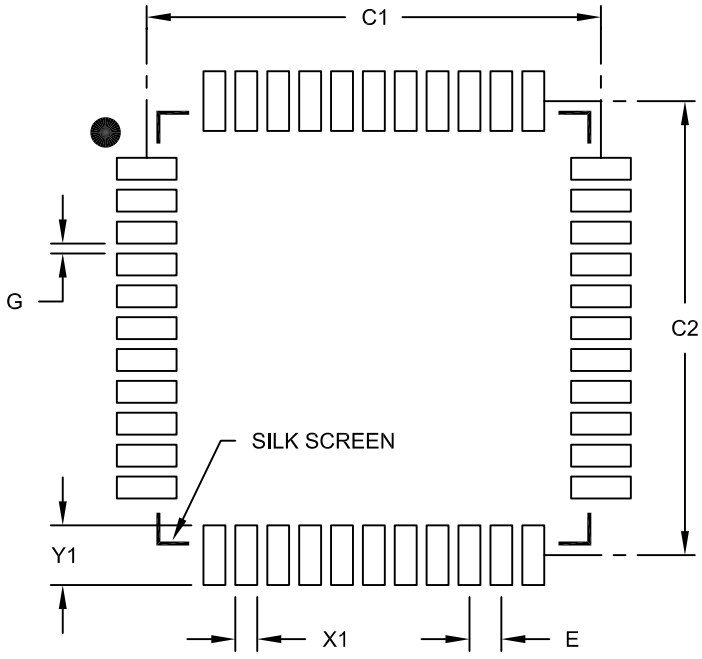

RECOMMENDED LAND PATTERN

Units		MILLIMETERS		
Dimension Limits		MIN	NOM	MAX
Contact Pitch	E	0.80 BSC		
Contact Pad Spacing	C1		11.40	
Contact Pad Spacing	C2		11.40	
Contact Pad Width (X44)	X1			0.55
Contact Pad Length (X44)	Y1			1.50
Distance Between Pads	G	0.25		

Notes:

1. Dimensioning and tolerancing per ASME Y14.5M
   BSC: Basic Dimension. Theoretically exact value shown without tolerances.

Microchip Technology Drawing No. C04-2076B

© 2011-2016 Microchip Technology Inc.

Revision F (February 2014)

This revision includes the addition of the following devices:

- PIC32MX170F256B
- PIC32MX170F256D
- PIC32MX270F256B
- PIC32MX270F256D

In addition, this revision includes the following major changes as described in Table A-5, as well as minor updates to text and formatting, which were incorporated throughout the document.

TABLE A-5: MAJOR SECTION UPDATES

Section	Update Description
32-bit Microcontrollers (up to 256 KB Flash and 64 KB SRAM) with Audio and Graphics Interfaces, USB, and Advanced Analog	Added new devices to the family features (see Table 1 and Table 2). Updated pin diagrams to include new devices (see **"Pin Diagrams"**).
1.0 "Device Overview"	Added Note 3 reference to the following pin names: VBUS, VUSB3V3, VBUSON, D+, D-, and USBID.
2.0 "Guidelines for Getting Started with 32-bit MCUs"	Replaced Figure 2-1: Recommended Minimum Connection. Updated Figure 2-2: $\overline{\text{MCLR}}$ Pin Connections. Added **2.9 "Sosc Design Recommendation"**.
4.0 "Memory Organization"	Added memory tables for devices with 64 KB RAM (see Table 4-4 through Table 4-5). Changed the Virtual Addresses for all registers and updated the PWP bits in the DEVCFG: Device Configuration Word Summary (see Table 4-17). Updated the ODCA, ODCB, and ODCC port registers (see Table 4-19, Table 4-20, and Table 4-21). The RTCTIME, RTCDATE, ALRMTIME, and ALRMDATE registers were updated (see Table 4-25). Added Data Ram Size value for 64 KB RAM devices (see Register 4-5). Added Program Flash Size value for 256 KB Flash devices (see Register 4-5).
12.0 "Timer1"	The Timer1 block diagram was updated to include the 16-bit data bus (see Figure 12-1).
13.0 "Timer2/3, Timer4/5"	The Timer2-Timer5 block diagram (16-bit) was updated to include the 16-bit data bus (see Figure 13-1). The Timer2/3, Timer4/5 block diagram (32-bit) was updated to include the 32-bit data bus (see Figure 13-1).
19.0 "Parallel Master Port (PMP)"	The CSF<1:0> bit value definitions for '00' and '01' were updated (see Register 19-1). Bit 14 in the Parallel Port Address register (PMADDR) was updated (see Register 19-3).
20.0 "Real-Time Clock and Calendar (RTCC)"	The following registers were updated: RTCTIME (see Register 20-3) RTCDATE (see Register 20-4) ALRMTIME (see Register 20-5) ALRMDATE (see Register 20-6)
26.0 "Special Features"	Updated the PWP bits (see Register 26-1).
29.0 "Electrical Characteristics"	Added parameters DO50 and DO50a to the Capacitive Loading Requirements on Output Pins (see Table 29-14). Added Note 5 to the IDD DC Characteristics (see Table 29-5). Added Note 4 to the IIDLE DC Characteristics (see Table 29-6). Added Note 5 to the IPD DC Characteristics (see Table 29-7). Updated the conditions for parameters USB321 (VOL) and USB322 (VOH) in the OTG Electrical Specifications (see Table 29-38).
Product Identification System	Added 40 MHz speed information.

© 2011-2016 Microchip Technology Inc.