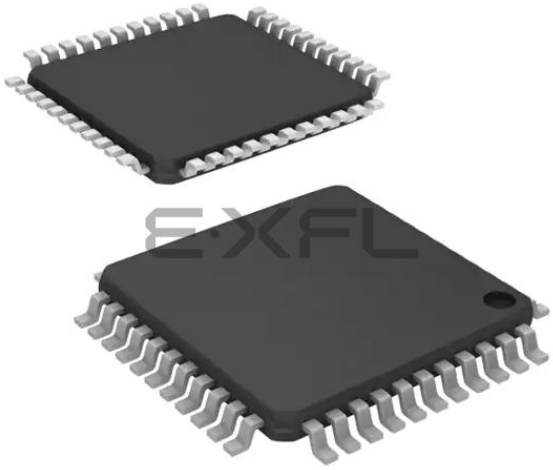

Welcome to E-XFL.COM

What is "Embedded - Microcontrollers"?

"Embedded - Microcontrollers" refer to small, integrated circuits designed to perform specific tasks within larger systems. These microcontrollers are essentially compact computers on a single chip, containing a processor core, memory, and programmable input/output peripherals. They are called "embedded" because they are embedded within electronic devices to control various functions, rather than serving as standalone computers. Microcontrollers are crucial in modern electronics, providing the intelligence and control needed for a wide range of applications.

Applications of "Embedded - Microcontrollers"

Details	
Product Status	Active
Core Processor	MIPS32® M4K™
Core Size	32-Bit Single-Core
Speed	40MHz
Connectivity	I²C, IrDA, LINbus, PMP, SPI, UART/USART, USB OTG
Peripherals	Brown-out Detect/Reset, DMA, I²S, POR, PWM, WDT
Number of I/O	33
Program Memory Size	64KB (64K x 8)
Program Memory Type	FLASH
EEPROM Size	-
RAM Size	16K x 8
Voltage - Supply (Vcc/Vdd)	2.3V ~ 3.6V
Data Converters	A/D 13x10b
Oscillator Type	Internal
Operating Temperature	-40°C ~ 105°C (TA)
Mounting Type	Surface Mount
Package / Case	44-TQFP
Supplier Device Package	44-TQFP (10x10)
Purchase URL	https://www.e-xfl.com/product-detail/microchip-technology/pic32mx230f064dt-v-pt

TABLE 4: PIN NAMES FOR 28-PIN USB DEVICES

28-PIN SOIC, SPDIP, SSOP (TOP VIEW)(1,2,3)

1 28 1 28 1 28

SSOP **SOIC** **SPDIP**

PIC32MX210F016B
PIC32MX220F032B
PIC32MX230F064B
PIC32MX230F256B
PIC32MX250F128B
PIC32MX270F256B

Pin #	Full Pin Name	Pin #	Full Pin Name
1	$\overline{\text{MCLR}}$	15	VBUS
2	PGED3/VREF+/CVREF+/AN0/C3INC/RPA0/CTED1/PMD7/RA0	16	TDI/RPB7/CTED3/PMD5/INT0/RB7
3	PGEC3/VREF-/CVREF-/AN1/RPA1/CTED2/PMD6/RA1	17	TCK/RPB8/SCL1/CTED10/PMD4/RB8
4	PGED1/AN2/C1IND/C2INB/C3IND/RPB0/PMD0/RB0	18	TDO/RPB9/SDA1/CTED4/PMD3/RB9
5	PGEC1/AN3/C1INC/C2INA/RPB1/CTED12/PMD1/RB1	19	VSS
6	AN4/C1INB/C2IND/RPB2/SDA2/CTED13/PMD2/RB2	20	VCAP
7	AN5/C1INA/C2INC/RTCC/RPB3/SCL2/PMWR/RB3	21	PGED2/RPB10/D+/CTED11/RB10
8	VSS	22	PGEC2/RPB11/D-/RB11
9	OSC1/CLKI/RPA2/RA2	23	VUSB3V3
10	OSC2/CLKO/RPA3/PMA0/RA3	24	AN11/RPB13/CTPLS/PMRD/RB13
11	SOSCI/RPB4/RB4	25	CVREFOUT/AN10/C3INB/RPB14/VBUSON/SCK1/CTED5/RB14
12	SOSCO/RPA4/T1CK/CTED9/PMA1/RA4	26	AN9/C3INA/RPB15/SCK2/CTED6/PMCS1/RB15
13	VDD	27	AVSS
14	TMS/RPB5/USBID/RB5	28	AVDD

Note 1: The RPn pins can be used by remappable peripherals. See Table 1 for the available peripherals and **Section 11.3 "Peripheral Pin Select"** for restrictions.

2: Every I/O port pin (RAx-RCx) can be used as a change notification pin (CNAx-CNCx). See **Section 11.0 "I/O Ports"** for more information.

3: Shaded pins are 5V tolerant.

TABLE 9: PIN NAMES FOR 44-PIN GENERAL PURPOSE DEVICES

44-PIN QFN (TOP VIEW)(1,2,3,5)

PIC32MX110F016D
PIC32MX120F032D
PIC32MX130F064D
PIC32MX130F256D
PIC32MX150F128D
PIC32MX170F256D

44 1

Pin #	Full Pin Name	Pin #	Full Pin Name
1	RPB9/SDA1/CTED4/PMD3/RB9	23	AN4/C1INB/C2IND/RPB2/SDA2/CTED13/RB2
2	RPC6/PMA1/RC6	24	AN5/C1INA/C2INC/RTCC/RPB3/SCL2/RB3
3	RPC7/PMA0/RC7	25	AN6/RPC0/RC0
4	RPC8/PMA5/RC8	26	AN7/RPC1/RC1
5	RPC9/CTED7/PMA6/RC9	27	AN8/RPC2/PMA2/RC2
6	VSS	28	VDD
7	VCAP	29	VSS
8	PGED2/RPB10/CTED11/PMD2/RB10	30	OSC1/CLKI/RPA2/RA2
9	PGEC2/RPB11/PMD1/RB11	31	OSC2/CLKO/RPA3/RA3
10	AN12/PMD0/RB12	32	TDO/RPA8/PMA8/RA8
11	AN11/RPB13/CTPLS/PMRD/RB13	33	SOSCI/RPB4/RB4
12	PGED4(4)/TMS/PMA10/RA10	34	SOSCO/RPA4/T1CK/CTED9/RA4
13	PGEC4(4)/TCK/CTED8/PMA7/RA7	35	TDI/RPA9/PMA9/RA9
14	CVREFOUT/AN10/C3INB/RPB14/SCK1/CTED5/PMWR/RB14	36	RPC3/RC3
15	AN9/C3INA/RPB15/SCK2/CTED6/PMCS1/RB15	37	RPC4/PMA4/RC4
16	AVSS	38	RPC5/PMA3/RC5
17	AVDD	39	VSS
18	$\overline{\text{MCLR}}$	40	VDD
19	VREF+/CVREF+/AN0/C3INC/RPA0/CTED1/RA0	41	PGED3/RPB5/PMD7/RB5
20	VREF-/CVREF-/AN1/RPA1/CTED2/RA1	42	PGEC3/RPB6/PMD6/RB6
21	PGED1/AN2/C1IND/C2INB/C3IND/RPB0/RB0	43	RPB7/CTED3/PMD5/INT0/RB7
22	PGEC1/AN3/C1INC/C2INA/RPB1/CTED12/RB1	44	RPB8/SCL1/CTED10/PMD4/RB8

Note 1: The RPn pins can be used by remappable peripherals. See Table 1 for the available peripherals and **Section 11.3 "Peripheral Pin Select"** for restrictions.
2: Every I/O port pin (RAx-RCx) can be used as a change notification pin (CNAx-CNCx). See **Section 11.0 "I/O Ports"** for more information.
3: The metal plane at the bottom of the device is not connected to any pins and is recommended to be connected to VSS externally.
4: This pin function is not available on PIC32MX110F016D and PIC32MX120F032D devices.
5: Shaded pins are 5V tolerant.

© 2011-2016 Microchip Technology Inc.

Referenced Sources

This device data sheet is based on the following individual chapters of the *"PIC32 Family Reference Manual"*. These documents should be considered as the general reference for the operation of a particular module or device feature.

Note: To access the following documents, refer to the *Documentation > Reference Manuals* section of the Microchip PIC32 website: http://www.microchip.com/pic32

- **Section 1. "Introduction"** (DS60001127)
- **Section 2. "CPU"** (DS60001113)
- **Section 3. "Memory Organization"** (DS60001115)
- **Section 5. "Flash Program Memory"** (DS60001121)
- **Section 6. "Oscillator Configuration"** (DS60001112)
- **Section 7. "Resets"** (DS60001118)
- **Section 8. "Interrupt Controller"** (DS60001108)
- **Section 9. "Watchdog Timer and Power-up Timer"** (DS60001114)
- **Section 10. "Power-Saving Features"** (DS60001130)
- **Section 12. "I/O Ports"** (DS60001120)
- **Section 13. "Parallel Master Port (PMP)"** (DS60001128)
- **Section 14. "Timers"** (DS60001105)
- **Section 15. "Input Capture"** (DS60001122)
- **Section 16. "Output Compare"** (DS60001111)
- **Section 17. "10-bit Analog-to-Digital Converter (ADC)"** (DS60001104)
- **Section 19. "Comparator"** (DS60001110)
- **Section 20. "Comparator Voltage Reference (CVREF)"** (DS60001109)
- **Section 21. "Universal Asynchronous Receiver Transmitter (UART)"** (DS60001107)
- **Section 23. "Serial Peripheral Interface (SPI)"** (DS60001106)
- **Section 24. "Inter-Integrated Circuit (I^2C)"** (DS60001116)
- **Section 27. "USB On-The-Go (OTG)"** (DS60001126)
- **Section 29. "Real-Time Clock and Calendar (RTCC)"** (DS60001125)
- **Section 31. "Direct Memory Access (DMA) Controller"** (DS60001117)
- **Section 32. "Configuration"** (DS60001124)
- **Section 33. "Programming and Diagnostics"** (DS60001129)
- **Section 37. "Charge Time Measurement Unit (CTMU)"** (DS60001167)

© 2011-2016 Microchip Technology Inc.

TABLE 1-1: PINOUT I/O DESCRIPTIONS (CONTINUED)

Pin Name	Pin Number(1)				Pin Type	Buffer Type	Description
	28-pin QFN	28-pin SSOP/ SPDIP/ SOIC	36-pin VTLA	44-pin QFN/ TQFP/ VTLA			
RC0	—	—	3	25	I/O	ST	PORTC is a bidirectional I/O port
RC1	—	—	4	26	I/O	ST	
RC2	—	—	—	27	I/O	ST	
RC3	—	—	11	36	I/O	ST	
RC4	—	—	—	37	I/O	ST	
RC5	—	—	—	38	I/O	ST	
RC6	—	—	—	2	I/O	ST	
RC7	—	—	—	3	I/O	ST	
RC8	—	—	—	4	I/O	ST	
RC9	—	—	20	5	I/O	ST	
T1CK	9	12	10	34	I	ST	Timer1 external clock input
T2CK	PPS	PPS	PPS	PPS	I	ST	Timer2 external clock input
T3CK	PPS	PPS	PPS	PPS	I	ST	Timer3 external clock input
T4CK	PPS	PPS	PPS	PPS	I	ST	Timer4 external clock input
T5CK	PPS	PPS	PPS	PPS	I	ST	Timer5 external clock input
$\overline{\text{U1CTS}}$	PPS	PPS	PPS	PPS	I	ST	UART1 clear to send
$\overline{\text{U1RTS}}$	PPS	PPS	PPS	PPS	O	—	UART1 ready to send
U1RX	PPS	PPS	PPS	PPS	I	ST	UART1 receive
U1TX	PPS	PPS	PPS	PPS	O	—	UART1 transmit
$\overline{\text{U2CTS}}$	PPS	PPS	PPS	PPS	I	ST	UART2 clear to send
$\overline{\text{U2RTS}}$	PPS	PPS	PPS	PPS	O	—	UART2 ready to send
U2RX	PPS	PPS	PPS	PPS	I	ST	UART2 receive
U2TX	PPS	PPS	PPS	PPS	O	—	UART2 transmit
SCK1	22	25	28	14	I/O	ST	Synchronous serial clock input/output for SPI1
SDI1	PPS	PPS	PPS	PPS	I	ST	SPI1 data in
SDO1	PPS	PPS	PPS	PPS	O	—	SPI1 data out
$\overline{\text{SS1}}$	PPS	PPS	PPS	PPS	I/O	ST	SPI1 slave synchronization or frame pulse I/O
SCK2	23	26	29	15	I/O	ST	Synchronous serial clock input/output for SPI2
SDI2	PPS	PPS	PPS	PPS	I	ST	SPI2 data in
SDO2	PPS	PPS	PPS	PPS	O	—	SPI2 data out
$\overline{\text{SS2}}$	PPS	PPS	PPS	PPS	I/O	ST	SPI2 slave synchronization or frame pulse I/O
SCL1	14	17	18	44	I/O	ST	Synchronous serial clock input/output for I2C1

Legend: CMOS = CMOS compatible input or output; ST = Schmitt Trigger input with CMOS levels; TTL = TTL input buffer; Analog = Analog input; O = Output; PPS = Peripheral Pin Select; P = Power; I = Input; — = N/A

Note 1: Pin numbers are provided for reference only. See the **"Pin Diagrams"** section for device pin availability.

2: Pin number for PIC32MX1XX devices only.

3: Pin number for PIC32MX2XX devices only.

© 2011-2016 Microchip Technology Inc.

2.9 Typical Application Connection Examples

Examples of typical application connections are shown in Figure 2-5 and Figure 2-6.

FIGURE 2-5: CAPACITIVE TOUCH SENSING WITH GRAPHICS APPLICATION

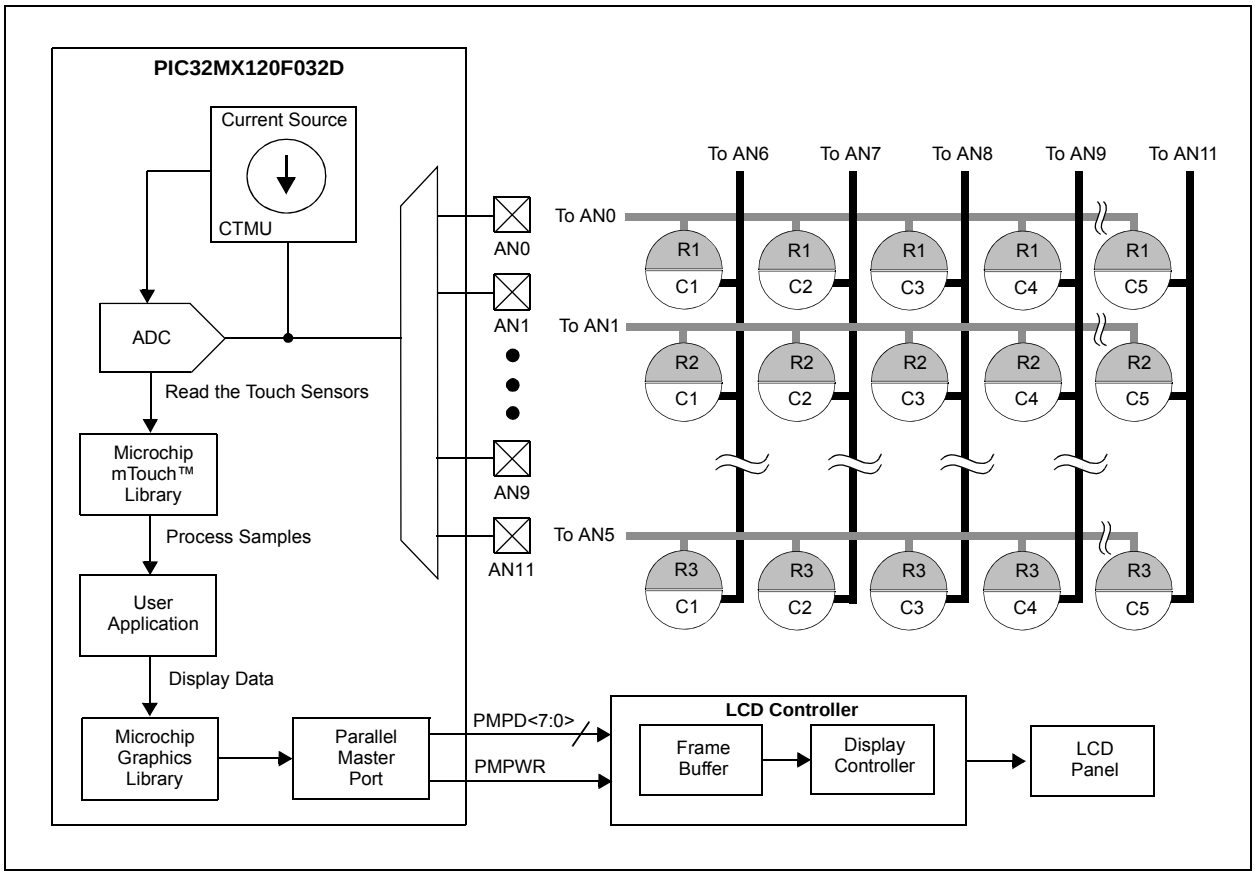

FIGURE 2-6: AUDIO PLAYBACK APPLICATION

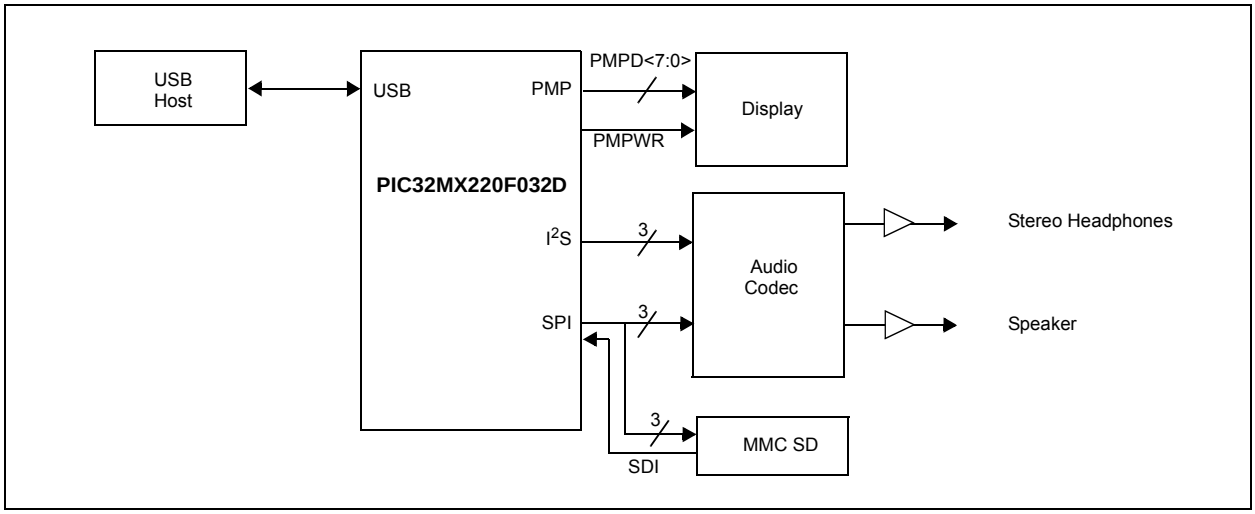

REGISTER 9-4: DCRCCON: DMA CRC CONTROL REGISTER

Bit Range	Bit 31/23/15/7	Bit 30/22/14/6	Bit 29/21/13/5	Bit 28/20/12/4	Bit 27/19/11/3	Bit 26/18/10/2	Bit 25/17/9/1	Bit 24/16/8/0
31:24	U-0	U-0	R/W-0	R/W-0	R/W-0	U-0	U-0	R/W-0
	—	—	BYTO<1:0>		WBO(1)	—	—	BITO
23:16	U-0	U-0	U-0	U-0	U-0	U-0	U-0	U-0
	—	—	—	—	—	—	—	—
15:8	U-0	U-0	U-0	R/W-0	R/W-0	R/W-0	R/W-0	R/W-0
	—	—	—	PLEN<4:0>				
7:0	R/W-0	R/W-0	R/W-0	U-0	U-0	R/W-0	R/W-0	R/W-0
	CRCEN	CRCAPP(1)	CRCTYP	—	—	CRCCH<2:0>		

Legend:			
R = Readable bit	W = Writable bit	U = Unimplemented bit, read as ‘0’	
-n = Value at POR	‘1’ = Bit is set	‘0’ = Bit is cleared	x = Bit is unknown

bit 31-30 **Unimplemented:** Read as ‘0’

bit 29-28 **BYTO<1:0>:** CRC Byte Order Selection bits
- 11 = Endian byte swap on half-word boundaries (i.e., source half-word order with reverse source byte order per half-word)
- 10 = Swap half-words on word boundaries (i.e., reverse source half-word order with source byte order per half-word)
- 01 = Endian byte swap on word boundaries (i.e., reverse source byte order)
- 00 = No swapping (i.e., source byte order)

bit 27 **WBO:** CRC Write Byte Order Selection bit(1)
- 1 = Source data is written to the destination re-ordered as defined by BYTO<1:0>
- 0 = Source data is written to the destination unaltered

bit 26-25 **Unimplemented:** Read as ‘0’

bit 24 **BITO:** CRC Bit Order Selection bit

When CRCTYP (DCRCCON<15>) = 1 (CRC module is in IP Header mode):
- 1 = The IP header checksum is calculated Least Significant bit (LSb) first (i.e., reflected)
- 0 = The IP header checksum is calculated Most Significant bit (MSb) first (i.e., not reflected)

When CRCTYP (DCRCCON<15>) = 0 (CRC module is in LFSR mode):
- 1 = The LFSR CRC is calculated Least Significant bit first (i.e., reflected)
- 0 = The LFSR CRC is calculated Most Significant bit first (i.e., not reflected)

bit 23-13 **Unimplemented:** Read as ‘0’

bit 12-8 **PLEN<4:0>:** Polynomial Length bits

When CRCTYP (DCRCCON<15>) = 1 (CRC module is in IP Header mode):

These bits are unused.

When CRCTYP (DCRCCON<15>) = 0 (CRC module is in LFSR mode):

Denotes the length of the polynomial – 1.

bit 7 **CRCEN:** CRC Enable bit
- 1 = CRC module is enabled and channel transfers are routed through the CRC module
- 0 = CRC module is disabled and channel transfers proceed normally

Note 1: When WBO = 1, unaligned transfers are not supported and the CRCAPP bit cannot be set.

© 2011-2016 Microchip Technology Inc.

10.0 USB ON-THE-GO (OTG)

Note: This data sheet summarizes the features of the PIC32MX1XX/2XX 28/36/44-pin Family of devices. It is not intended to be a comprehensive reference source. To complement the information in this data sheet, refer to **Section 27. "USB On-The-Go (OTG)"** (DS60001126), which is available from the *Documentation* > *Reference Manual* section of the Microchip PIC32 web site (www.microchip.com/pic32).

The Universal Serial Bus (USB) module contains analog and digital components to provide a USB 2.0 Full-Speed and Low-Speed embedded host, Full-Speed device or OTG implementation with a minimum of external components. This module in Host mode is intended for use as an embedded host and therefore does not implement a UHCI or OHCI controller.

The USB module consists of the clock generator, the USB voltage comparators, the transceiver, the Serial Interface Engine (SIE), a dedicated USB DMA controller, pull-up and pull-down resistors, and the register interface. A block diagram of the PIC32 USB OTG module is presented in Figure 10-1.

The clock generator provides the 48 MHz clock required for USB Full-Speed and Low-Speed communication. The voltage comparators monitor the voltage on the VBUS pin to determine the state of the bus. The transceiver provides the analog translation between the USB bus and the digital logic. The SIE is a state machine that transfers data to and from the endpoint buffers and generates the hardware protocol for data transfers. The USB DMA controller transfers data between the data buffers in RAM and the SIE. The integrated pull-up and pull-down resistors eliminate the need for external signaling components. The register interface allows the CPU to configure and communicate with the module.

The PIC32 USB module includes the following features:

- USB Full-Speed support for Host and Device
- Low-Speed Host support
- USB OTG support
- Integrated signaling resistors
- Integrated analog comparators for VBUS monitoring
- Integrated USB transceiver
- Transaction handshaking performed by hardware
- Endpoint buffering anywhere in system RAM
- Integrated DMA to access system RAM and Flash

Note: The implementation and use of the USB specifications, as well as other third party specifications or technologies, may require licensing; including, but not limited to, USB Implementers Forum, Inc., also referred to as USB-IF (www.usb.org). The user is fully responsible for investigating and satisfying any applicable licensing obligations.

REGISTER 10-12: U1ADDR: USB ADDRESS REGISTER

Bit Range	Bit 31/23/15/7	Bit 30/22/14/6	Bit 29/21/13/5	Bit 28/20/12/4	Bit 27/19/11/3	Bit 26/18/10/2	Bit 25/17/9/1	Bit 24/16/8/0
31:24	U-0	U-0	U-0	U-0	U-0	U-0	U-0	U-0
	—	—	—	—	—	—	—	—
23:16	U-0	U-0	U-0	U-0	U-0	U-0	U-0	U-0
	—	—	—	—	—	—	—	—
15:8	U-0	U-0	U-0	U-0	U-0	U-0	U-0	U-0
	—	—	—	—	—	—	—	—
7:0	R/W-0	R/W-0	R/W-0	R/W-0	R/W-0	R/W-0	R/W-0	R/W-0
	LSPDEN	DEVADDR<6:0>						

Legend:			
R = Readable bit	W = Writable bit	U = Unimplemented bit, read as ‘0’	
-n = Value at POR	‘1’ = Bit is set	‘0’ = Bit is cleared	x = Bit is unknown

bit 31-8 **Unimplemented:** Read as ‘0’

bit 7 **LSPDEN:** Low-Speed Enable Indicator bit
1 = Next token command to be executed at Low-Speed
0 = Next token command to be executed at Full-Speed

bit 6-0 **DEVADDR<6:0>:** 7-bit USB Device Address bits

REGISTER 10-13: U1FRML: USB FRAME NUMBER LOW REGISTER

Bit Range	Bit 31/23/15/7	Bit 30/22/14/6	Bit 29/21/13/5	Bit 28/20/12/4	Bit 27/19/11/3	Bit 26/18/10/2	Bit 25/17/9/1	Bit 24/16/8/0
31:24	U-0	U-0	U-0	U-0	U-0	U-0	U-0	U-0
	—	—	—	—	—	—	—	—
23:16	U-0	U-0	U-0	U-0	U-0	U-0	U-0	U-0
	—	—	—	—	—	—	—	—
15:8	U-0	U-0	U-0	U-0	U-0	U-0	U-0	U-0
	—	—	—	—	—	—	—	—
7:0	R-0	R-0	R-0	R-0	R-0	R-0	R-0	R-0
	FRML<7:0>							

Legend:			
R = Readable bit	W = Writable bit	U = Unimplemented bit, read as ‘0’	
-n = Value at POR	‘1’ = Bit is set	‘0’ = Bit is cleared	x = Bit is unknown

bit 31-8 **Unimplemented:** Read as ‘0’

bit 7-0 **FRML<7:0>:** The 11-bit Frame Number Lower bits
The register bits are updated with the current frame number whenever a SOF TOKEN is received.

11.4 Ports Control Registers

TABLE 11-3: PORTA REGISTER MAP

Virtual Address (BF88_#)	Register Name(1)	Bit Range	Bits 31/15	30/14	29/13	28/12	27/11	26/10	25/9	24/8	23/7	22/6	21/5	20/4	19/3	18/2	17/1	16/0	All Resets
6000	ANSELA	31:16	—	—	—	—	—	—	—	—	—	—	—	—	—	—	—	—	0000
		15:0	—	—	—	—	—	—	—	—	—	—	—	—	—	—	ANSA1	ANSA0	0003
6010	TRISA	31:16	—	—	—	—	—	—	—	—	—	—	—	—	—	—	—	—	0000
		15:0	—	—	—	—	—	TRISA10(2)	TRISA9(2)	TRISA8(2)	TRISA7(2)	—	—	TRISA4	TRISA3	TRISA2	TRISA1	TRISA0	079F
6020	PORTA	31:16	—	—	—	—	—	—	—	—	—	—	—						0000
		15:0	—	—	—	—	—	RA10(2)	RA9(2)	RA8(2)	RA7(2)	—	—	RA4	RA3	RA2	RA1	RA0	xxxx
6030	LATA	31:16	—	—	—	—	—	—	—	—	—	—	—	—	—	—	—	—	0000
		15:0	—	—	—	—	—	LATA10(2)	LATA9(2)	LATA8(2)	LATA7(2)	—	—	LATA4	LATA3	LATA2	LATA1	LATA0	xxxx
6040	ODCA	31:16	—	—	—	—	—	—	—	—	—	—	—	—	—	—	—	—	0000
		15:0	—	—	—	—	—	ODCA10(2)	ODCA9(2)	ODCA8(2)	ODCA7(2)	—	—	ODCA4	ODCA3	ODCA2	ODCA1	ODCA0	0000
6050	CNPUA	31:16	—	—	—	—	—	—	—	—	—	—	—	—	—	—	—	—	0000
		15:0	—	—	—	—	—	CNPUA10(2)	CNPUA9(2)	CNPUA8(2)	CNPUA7(2)	—	—	CNPUA4	CNPUA3	CNPUA2	CNPUA1	CNPUA0	0000
6060	CNPDA	31:16	—	—	—	—	—	—	—	—	—	—	—	—	—	—	—	—	0000
		15:0	—	—	—	—	—	CNPDA10(2)	CNPDA9(2)	CNPDA8(2)	CNPDA7(2)	—	—	CNPDA4	CNPDA3	CNPDA2	CNPDA1	CNPDA0	0000
6070	CNCONA	31:16	—	—	—	—	—	—	—	—	—	—	—	—	—	—	—	—	0000
		15:0	ON	—	SIDL	—	—	—	—	—	—	—	—	—	—	—	—	—	0000
6080	CNENA	31:16	—	—	—	—	—	—	—	—	—	—	—	—	—	—	—	—	0000
		15:0	—	—	—	—	—	CNIEA10(2)	CNIEA9(2)	CNIEA8(2)	CNIEA7(2)	—	—	CNIEA4	CNIEA3	CNIEA2	CNIEA1	CNIEA0	0000
6090	CNSTATA	31:16	—	—	—	—	—	—	—	—	—	—	—	—	—	—	—	—	0000
		15:0	—	—	—	—	—	CNSTATA10(2)	CNSTATA9(2)	CNSTATA8(2)	CNSTATA7(2)	—	—	CNSTATA4	CNSTATA3	CNSTATA2	CNSTATA1	CNSTATA0	0000

Legend: x = unknown value on Reset; — = unimplemented, read as '0'. Reset values are shown in hexadecimal.

Note 1: All registers in this table have corresponding CLR, SET and INV registers at their virtual addresses, plus offsets of 0x4, 0x8 and 0xC, respectively. See **Section 11.2 "CLR, SET and INV Registers"** for more information.

2: This bit is only available on 44-pin devices.

© 2011-2016 Microchip Technology Inc.

REGISTER 12-1: T1CON: TYPE A TIMER CONTROL REGISTER (CONTINUED)

bit 3 **Unimplemented:** Read as '0'

bit 2 **TSYNC:** Timer External Clock Input Synchronization Selection bit

When TCS = 1:
1 = External clock input is synchronized
0 = External clock input is not synchronized

When TCS = 0:
This bit is ignored.

bit 1 **TCS:** Timer Clock Source Select bit

1 = External clock from TxCKI pin
0 = Internal peripheral clock

bit 0 **Unimplemented:** Read as '0'

Note 1: When using 1:1 PBCmLK divisor, the user's software should not read/write the peripheral SFRs in the SYSCLK cycle immediately following the instruction that clears the module's ON bit.

© 2011-2016 Microchip Technology Inc.

NOTES:

© 2011-2016 Microchip Technology Inc.

REGISTER 18-1: I2CxCON: I^{2}C CONTROL REGISTER (CONTINUED)

bit 7 **GCEN:** General Call Enable bit (when operating as I^{2}C slave)
1 = Enable interrupt when a general call address is received in the I2CxRSR (module is enabled for reception)
0 = General call address is disabled

bit 6 **STREN:** SCLx Clock Stretch Enable bit (when operating as I^{2}C slave)
Used in conjunction with SCLREL bit.
1 = Enable software or receive clock stretching
0 = Disable software or receive clock stretching

bit 5 **ACKDT:** Acknowledge Data bit (when operating as I^{2}C master, applicable during master receive)
Value that is transmitted when the software initiates an Acknowledge sequence.
1 = Send a NACK during an Acknowledge sequence
0 = Send an ACK during an Acknowledge sequence

bit 4 **ACKEN:** Acknowledge Sequence Enable bit (when operating as I^{2}C master, applicable during master receive)
1 = Initiate Acknowledge sequence on SDAx and SCLx pins and transmit ACKDT data bit. Hardware clear at end of master Acknowledge sequence.
0 = Acknowledge sequence not in progress

bit 3 **RCEN:** Receive Enable bit (when operating as I^{2}C master)
1 = Enables Receive mode for I^{2}C. Hardware clear at end of eighth bit of master receive data byte.
0 = Receive sequence not in progress

bit 2 **PEN:** Stop Condition Enable bit (when operating as I^{2}C master)
1 = Initiate Stop condition on SDAx and SCLx pins. Hardware clear at end of master Stop sequence.
0 = Stop condition not in progress

bit 1 **RSEN:** Repeated Start Condition Enable bit (when operating as I^{2}C master)
1 = Initiate Repeated Start condition on SDAx and SCLx pins. Hardware clear at end of master Repeated Start sequence.
0 = Repeated Start condition not in progress

bit 0 **SEN:** Start Condition Enable bit (when operating as I^{2}C master)
1 = Initiate Start condition on SDAx and SCLx pins. Hardware clear at end of master Start sequence.
0 = Start condition not in progress

Note 1: When using 1:1 PBCLK divisor, the user's software should not read/write the peripheral's SFRs in the SYSCLK cycle immediately following the instruction that clears the module's ON bit.

REGISTER 19-2: UxSTA: UARTx STATUS AND CONTROL REGISTER

Bit Range	Bit 31/23/15/7	Bit 30/22/14/6	Bit 29/21/13/5	Bit 28/20/12/4	Bit 27/19/11/3	Bit 26/18/10/2	Bit 25/17/9/1	Bit 24/16/8/0
31:24	U-0	U-0	U-0	U-0	U-0	U-0	U-0	R/W-0
	—	—	—	—	—	—	—	ADM_EN
23:16	R/W-0	R/W-0	R/W-0	R/W-0	R/W-0	R/W-0	R/W-0	R/W-0
	ADDR<7:0>							
15:8	R/W-0	R/W-0	R/W-0	R/W-0	R/W-0	R/W-0	R-0	R-1
	UTXISEL<1:0>		UTXINV	URXEN	UTXBRK	UTXEN	UTXBF	TRMT
7:0	R/W-0	R/W-0	R/W-0	R-1	R-0	R-0	R/W-0	R-0
	URXISEL<1:0>		ADDEN	RIDLE	PERR	FERR	OERR	URXDA

Legend:			
R = Readable bit	W = Writable bit	U = Unimplemented bit, read as ‘0’	
-n = Value at POR	‘1’ = Bit is set	‘0’ = Bit is cleared	x = Bit is unknown

bit 31-25 **Unimplemented:** Read as ‘0’

bit 24 **ADM_EN:** Automatic Address Detect Mode Enable bit
1 = Automatic Address Detect mode is enabled
0 = Automatic Address Detect mode is disabled

bit 23-16 **ADDR<7:0>:** Automatic Address Mask bits
When the ADM_EN bit is ‘1’, this value defines the address character to use for automatic address detection.

bit 15-14 **UTXISEL<1:0>:** TX Interrupt Mode Selection bits
11 = Reserved, do not use
10 = Interrupt is generated and asserted while the transmit buffer is empty
01 = Interrupt is generated and asserted when all characters have been transmitted
00 = Interrupt is generated and asserted while the transmit buffer contains at least one empty space

bit 13 **UTXINV:** Transmit Polarity Inversion bit
If IrDA mode is disabled (i.e., IREN (UxMODE<12>) is ‘0’):
1 = UxTX Idle state is ‘0’
0 = UxTX Idle state is ‘1’

If IrDA mode is enabled (i.e., IREN (UxMODE<12>) is ‘1’):
1 = IrDA encoded UxTX Idle state is ‘1’
0 = IrDA encoded UxTX Idle state is ‘0’

bit 12 **URXEN:** Receiver Enable bit
1 = UARTx receiver is enabled. UxRX pin is controlled by UARTx (if ON = 1)
0 = UARTx receiver is disabled. UxRX pin is ignored by the UARTx module. UxRX pin is controlled by port.

bit 11 **UTXBRK:** Transmit Break bit
1 = Send Break on next transmission. Start bit followed by twelve ‘0’ bits, followed by Stop bit; cleared by hardware upon completion
0 = Break transmission is disabled or completed

bit 10 **UTXEN:** Transmit Enable bit
1 = UARTx transmitter is enabled. UxTX pin is controlled by UARTx (if ON = 1).
0 = UARTx transmitter is disabled. Any pending transmission is aborted and buffer is reset. UxTX pin is controlled by port.

bit 9 **UTXBF:** Transmit Buffer Full Status bit (read-only)
1 = Transmit buffer is full
0 = Transmit buffer is not full, at least one more character can be written

bit 8 **TRMT:** Transmit Shift Register is Empty bit (read-only)
1 = Transmit shift register is empty and transmit buffer is empty (the last transmission has completed)
0 = Transmit shift register is not empty, a transmission is in progress or queued in the transmit buffer

REGISTER 21-3: RTCTIME: RTC TIME VALUE REGISTER

Bit Range	Bit 31/23/15/7	Bit 30/22/14/6	Bit 29/21/13/5	Bit 28/20/12/4	Bit 27/19/11/3	Bit 26/18/10/2	Bit 25/17/9/1	Bit 24/16/8/0
31:24	U-0	U-0	R/W-x	R/W-x	R/W-x	R/W-x	R/W-x	R/W-x
	—	—	HR10<1:0>		HR01<3:0>			
23:16	U-0	R/W-x	R/W-x	R/W-x	R/W-x	R/W-x	R/W-x	R/W-x
	—	MIN10<2:0>			MIN01<3:0>			
15:8	U-0	R/W-x	R/W-x	R/W-x	R/W-x	R/W-x	R/W-x	R/W-x
	—	SEC10<2:0>			SEC01<3:0>			
7:0	U-0	U-0	U-0	U-0	U-0	U-0	U-0	U-0
	—	—	—	—	—	—	—	—

Legend:			
R = Readable bit	W = Writable bit	U = Unimplemented bit, read as ‘0’	
-n = Value at POR	‘1’ = Bit is set	‘0’ = Bit is cleared	x = Bit is unknown

bit 31-30 **Unimplemented:** Read as ‘0’

bit 29-28 **HR10<1:0>:** Binary-Coded Decimal Value of Hours bits, 10s place digit; contains a value from 0 to 2

bit 27-24 **HR01<3:0>:** Binary-Coded Decimal Value of Hours bits, 1s place digit; contains a value from 0 to 9

bit 23 **Unimplemented:** Read as ‘0’

bit 22-20 **MIN10<2:0>:** Binary-Coded Decimal Value of Minutes bits, 10s place digit; contains a value from 0 to 5

bit 19-16 **MIN01<3:0>:** Binary-Coded Decimal Value of Minutes bits, 1s place digit; contains a value from 0 to 9

bit 15 **Unimplemented:** Read as ‘0’

bit 14-12 **SEC10<2:0>:** Binary-Coded Decimal Value of Seconds bits, 10s place digit; contains a value from 0 to 5

bit 11-8 **SEC01<3:0>:** Binary-Coded Decimal Value of Seconds bits, 1s place digit; contains a value from 0 to 9

bit 7-0 **Unimplemented:** Read as ‘0’

Note: This register is only writable when RTCWREN = 1 (RTCCON<3>).

REGISTER 22-5: AD1CSSL: ADC INPUT SCAN SELECT REGISTER

Bit Range	Bit 31/23/15/7	Bit 30/22/14/6	Bit 29/21/13/5	Bit 28/20/12/4	Bit 27/19/11/3	Bit 26/18/10/2	Bit 25/17/9/1	Bit 24/16/8/0
31:24	U-0	U-0	U-0	U-0	U-0	U-0	U-0	U-0
	—	—	—	—	—	—	—	—
23:16	U-0	U-0	U-0	U-0	U-0	U-0	U-0	U-0
	—	—	—	—	—	—	—	—
15:8	R/W-0	R/W-0	R/W-0	R/W-0	R/W-0	R/W-0	R/W-0	R/W-0
	CSSL15	CSSL14	CSSL13	CSSL12	CSSL11	CSSL10	CSSL9	CSSL8
7:0	R/W-0	R/W-0	R/W-0	R/W-0	R/W-0	R/W-0	R/W-0	R/W-0
	CSSL7	CSSL6	CSSL5	CSSL4	CSSL3	CSSL2	CSSL1	CSSL0

Legend:			
R = Readable bit	W = Writable bit	U = Unimplemented bit, read as ‘0’	
-n = Value at POR	‘1’ = Bit is set	‘0’ = Bit is cleared	x = Bit is unknown

bit 31-16 **Unimplemented:** Read as ‘0’

bit 15-0 **CSSL<15:0>:** ADC Input Pin Scan Selection bits(1,2)

1 = Select ANx for input scan

0 = Skip ANx for input scan

Note 1: CSSL = ANx, where ‘x’ = 0-12; CSSL13 selects CTMU input for scan; CSSL14 selects IVREF for scan; CSSL15 selects VSS for scan.

2: On devices with less than 13 analog inputs, all CSSLx bits can be selected; however, inputs selected for scan without a corresponding input on the device will convert to VREFL.

© 2011-2016 Microchip Technology Inc.

FIGURE 30-3: I/O TIMING CHARACTERISTICS

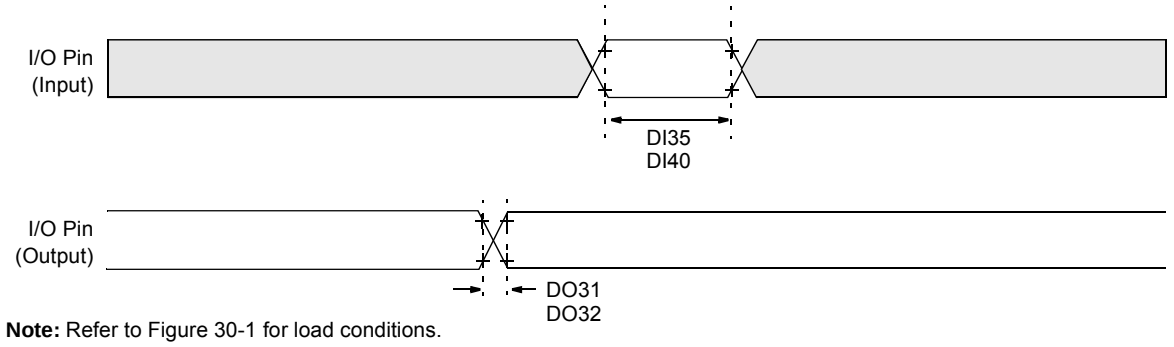

Note: Refer to Figure 30-1 for load conditions.

TABLE 30-21: I/O TIMING REQUIREMENTS

AC CHARACTERISTICS			Standard Operating Conditions: 2.3V to 3.6V (unless otherwise stated) Operating temperature -40°C ≤ TA ≤ +85°C for Industrial -40°C ≤ TA ≤ +105°C for V-temp				
Param. No.	**Symbol**	**Characteristics(2)**	**Min.**	**Typical(1)**	**Max.**	**Units**	**Conditions**
DO31	TIOR	Port Output Rise Time	—	5	15	ns	VDD < 2.5V
			—	5	10	ns	VDD > 2.5V
DO32	TIOF	Port Output Fall Time	—	5	15	ns	VDD < 2.5V
			—	5	10	ns	VDD > 2.5V
DI35	TINP	INTx Pin High or Low Time	10	—	—	ns	—
DI40	TRBP	CNx High or Low Time (input)	2	—	—	TSYSCLK	—

Note 1: Data in “Typical” column is at 3.3V, 25°C unless otherwise stated.

2: This parameter is characterized, but not tested in manufacturing.

© 2011-2016 Microchip Technology Inc.

FIGURE 30-8: OUTPUT COMPARE MODULE (OCx) TIMING CHARACTERISTICS

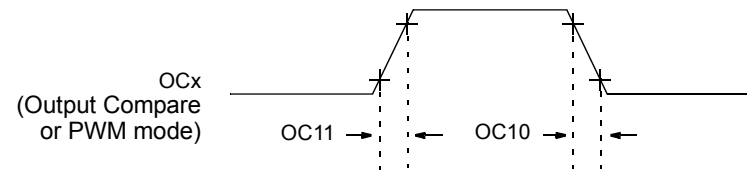

Note: Refer to Figure 30-1 for load conditions.

TABLE 30-26: OUTPUT COMPARE MODULE TIMING REQUIREMENTS

AC CHARACTERISTICS			Standard Operating Conditions: 2.3V to 3.6V (unless otherwise stated) Operating temperature -40°C ≤ TA ≤ +85°C for Industrial -40°C ≤ TA ≤ +105°C for V-temp				
Param. No.	**Symbol**	**Characteristics(1)**	**Min.**	**Typical(2)**	**Max.**	**Units**	**Conditions**
OC10	TCCF	OCx Output Fall Time	—	—	—	ns	See parameter DO32
OC11	TCCR	OCx Output Rise Time	—	—	—	ns	See parameter DO31

Note 1: These parameters are characterized, but not tested in manufacturing.

2: Data in “Typical” column is at 3.3V, 25°C unless otherwise stated. Parameters are for design guidance only and are not tested.

FIGURE 30-9: OCx/PWM MODULE TIMING CHARACTERISTICS

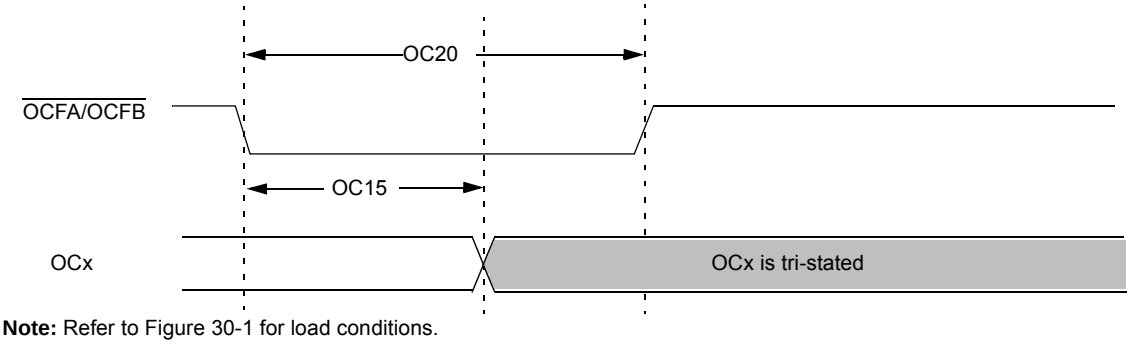

Note: Refer to Figure 30-1 for load conditions.

TABLE 30-27: SIMPLE OCx/PWM MODE TIMING REQUIREMENTS

AC CHARACTERISTICS			Standard Operating Conditions: 2.3V to 3.6V (unless otherwise stated) Operating temperature -40°C ≤ TA ≤ +85°C for Industrial -40°C ≤ TA ≤ +105°C for V-temp				
Param No.	**Symbol**	**Characteristics(1)**	**Min**	**Typical(2)**	**Max**	**Units**	**Conditions**
OC15	TFD	Fault Input to PWM I/O Change	—	—	50	ns	—
OC20	TFLT	Fault Input Pulse Width	50	—	—	ns	—

Note 1: These parameters are characterized, but not tested in manufacturing.

2: Data in “Typical” column is at 3.3V, 25°C unless otherwise stated. Parameters are for design guidance only and are not tested.

28-Lead Plastic Shrink Small Outline (SS) - 5.30 mm Body [SSOP]

Note: For the most current package drawings, please see the Microchip Packaging Specification located at http://www.microchip.com/packaging

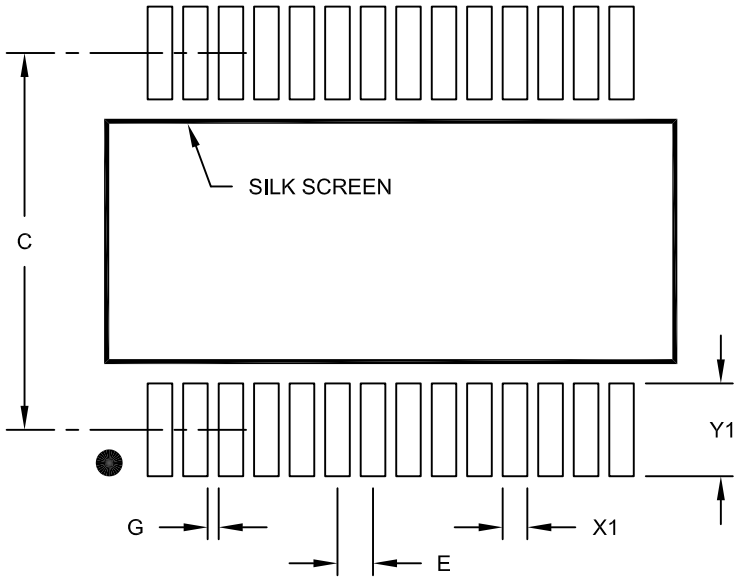

RECOMMENDED LAND PATTERN

Units		MILLIMETERS		
Dimension Limits		MIN	NOM	MAX
Contact Pitch	E		0.65 BSC	
Contact Pad Spacing	C		7.20	
Contact Pad Width (X28)	X1			0.45
Contact Pad Length (X28)	Y1			1.75
Distance Between Pads	G	0.20		

Notes:

1. Dimensioning and tolerancing per ASME Y14.5M

BSC: Basic Dimension. Theoretically exact value shown without tolerances.

Microchip Technology Drawing No. C04-2073A

© 2011-2016 Microchip Technology Inc.

INDEX

Numerics

50 MHz Electrical Characteristics 301

A

AC Characteristics 269
10-Bit Conversion Rate Parameters 291
ADC Specifications 289
Analog-to-Digital Conversion Requirements 292
EJTAG Timing Requirements 300
Internal FRC Accuracy 271
Internal RC Accuracy 271
OTG Electrical Specifications 298
Parallel Master Port Read Requirements 297
Parallel Master Port Write 298
Parallel Master Port Write Requirements 298
Parallel Slave Port Requirements 296
PLL Clock Timing 271
Analog-to-Digital Converter (ADC) 209
Assembler
MPASM Assembler 254

B

Block Diagrams
ADC Module 209
Comparator I/O Operating Modes 219
Comparator Voltage Reference 223
Connections for On-Chip Voltage Regulator 250
Core and Peripheral Modules 19
CPU 33
CTMU Configurations
Time Measurement 227
DMA 83
I2C Circuit 174
Input Capture 157
Interrupt Controller 63
JTAG Programming, Debugging and Trace Ports 250
Output Compare Module 161
PMP Pinout and Connections to External Devices 189
Reset System 59
RTCC 199
SPI Module 165
Timer1 143
Timer2/3/4/5 (16-Bit) 147
Typical Multiplexed Port Structure 127
UART 181
WDT and Power-up Timer 153
Brown-out Reset (BOR)
and On-Chip Voltage Regulator 250

C

C Compilers
MPLAB C18 254
Charge Time Measurement Unit. *See* CTMU.
Clock Diagram 74
Comparator
Specifications 267, 268
Comparator Module 219
Comparator Voltage Reference (CVref 223
Configuration Bit 239
Configuring Analog Port Pins 128
CPU
Architecture Overview 34
Coprocessor 0 Registers 35
Core Exception Types 36
EJTAG Debug Support 36
Power Management 36
CPU Module 27, 33
Customer Change Notification Service 341
Customer Notification Service 341
Customer Support 341

D

DC and AC Characteristics
Graphs and Tables 307
DC Characteristics 258
I/O Pin Input Specifications 263, 264
I/O Pin Output Specifications 265
Idle Current (IIDLE) 261
Power-Down Current (IPD) 262
Program Memory 266
Temperature and Voltage Specifications 259
DC Characteristics (50 MHz) 302
Idle Current (IIDLE) 303
Power-Down Current (IPD) 303
Development Support 253
Direct Memory Access (DMA) Controller 83

E

Electrical Characteristics 257
AC 269
Errata 16
External Clock
Timer1 Timing Requirements 275
Timer2, 3, 4, 5 Timing Requirements 276
Timing Requirements 270
External Clock (50 MHz)
Timing Requirements 304

F

Flash Program Memory 53
RTSP Operation 53

I

I/O Ports 127
Parallel I/O (PIO) 128
Write/Read Timing 128
Input Change Notification 128
Instruction Set 251
Inter-Integrated Circuit (I2C 173
Internal Voltage Reference Specifications 268
Internet Address 341
Interrupt Controller 63
IRG, Vector and Bit Location 64

M

Memory Maps
PIC32MX110/210 Devices
(4 KB RAM, 16 KB Flash) 38
PIC32MX120/220 Devices
(8 KB RAM, 32 KB Flash) 39
PIC32MX130/230
(16 KB RAM, 256 KB Flash) 43
PIC32MX130/230 Devices
(16 KB RAM, 64 KB Flash) 40
PIC32MX150/250 Devices
(32 KB RAM, 128 KB Flash) 41
PIC32MX170/270

U1OTGSTAT (USB OTG Status) ... 110
U1PWRC (USB Power Control) ... 112
U1SOF (USB SOF Threshold) ... 123
U1STAT (USB Status) ... 118
U1TOK (USB Token) ... 122
UxMODE (UARTx Mode) ... 183
UxSTA (UARTx Status and Control) ... 185
WDTCON (Watchdog Timer Control) ... 155
Resets ... 59
Revision History ... 329
RTCALRM (RTC ALARM Control) ... 203

S

Serial Peripheral Interface (SPI) ... 165
Software Simulator (MPLAB SIM) ... 255
Special Features ... 239

T

Timer1 Module ... 143
Timer2/3, Timer4/5 Modules ... 147
Timing Diagrams
10-Bit Analog-to-Digital Conversion (ASAM = 0, SSRC<2:0> = 000) ... 293
10-Bit Analog-to-Digital Conversion (ASAM = 1, SSRC<2:0> = 111, SAMC<4:0> = 00001) ... 294
EJTAG ... 300
External Clock ... 269
I/O Characteristics ... 272
I2Cx Bus Data (Master Mode) ... 283
I2Cx Bus Data (Slave Mode) ... 286
I2Cx Bus Start/Stop Bits (Master Mode) ... 283
I2Cx Bus Start/Stop Bits (Slave Mode) ... 286
Input Capture (CAPx) ... 276
OCx/PWM ... 277
Output Compare (OCx) ... 277
Parallel Master Port Read ... 296
Parallel Master Port Write ... 297
Parallel Slave Port ... 295
SPIx Master Mode (CKE = 0) ... 278
SPIx Master Mode (CKE = 1) ... 279
SPIx Slave Mode (CKE = 0) ... 280
SPIx Slave Mode (CKE = 1) ... 281
Timer1, 2, 3, 4, 5 External Clock ... 275
UART Reception ... 187
UART Transmission (8-bit or 9-bit Data) ... 187
Timing Requirements
CLKO and I/O ... 272
Timing Specifications
I2Cx Bus Data Requirements (Master Mode) ... 284
I2Cx Bus Data Requirements (Slave Mode) ... 287
Input Capture Requirements ... 276
Output Compare Requirements ... 277
Simple OCx/PWM Mode Requirements ... 277
SPIx Master Mode (CKE = 0) Requirements ... 278
SPIx Master Mode (CKE = 1) Requirements ... 279
SPIx Slave Mode (CKE = 1) Requirements ... 281
SPIx Slave Mode Requirements (CKE = 0) ... 280
Timing Specifications (50 MHz)
SPIx Master Mode (CKE = 0) Requirements ... 304
SPIx Master Mode (CKE = 1) Requirements ... 304
SPIx Slave Mode (CKE = 1) Requirements ... 305
SPIx Slave Mode Requirements (CKE = 0) ... 305

U

UART ... 181
USB On-The-Go (OTG) ... 103

V

VCAP pin ... 250
Voltage Regulator (On-Chip) ... 250

W

WWW Address ... 341
WWW, On-Line Support ... 16