Welcome to E-XFL.COM

What is "Embedded - Microcontrollers"?

"Embedded - Microcontrollers" refer to small, integrated circuits designed to perform specific tasks within larger systems. These microcontrollers are essentially compact computers on a single chip, containing a processor core, memory, and programmable input/output peripherals. They are called "embedded" because they are embedded within electronic devices to control various functions, rather than serving as standalone computers. Microcontrollers are crucial in modern electronics, providing the intelligence and control needed for a wide range of applications.

Applications of "Embedded - Microcontrollers"

Details	
Product Status	Active
Core Processor	MIPS32® M4K™
Core Size	32-Bit Single-Core
Speed	40MHz
Connectivity	I²C, IrDA, LINbus, SPI, UART/USART, USB OTG
Peripherals	Brown-out Detect/Reset, DMA, I²S, POR, PWM, WDT
Number of I/O	19
Program Memory Size	256KB (256K x 8)
Program Memory Type	FLASH
EEPROM Size	-
RAM Size	64K x 8
Voltage - Supply (Vcc/Vdd)	2.3V ~ 3.6V
Data Converters	A/D 9x10b
Oscillator Type	Internal
Operating Temperature	-40°C ~ 85°C (TA)
Mounting Type	Surface Mount
Package / Case	28-SSOP (0.209", 5.30mm Width)
Supplier Device Package	28-SSOP
Purchase URL	https://www.e-xfl.com/product-detail/microchip-technology/pic32mx270f256b-i-ss

TABLE 7: PIN NAMES FOR 36-PIN GENERAL PURPOSE DEVICES

36-PIN VTLA (TOP VIEW)(1,2,3,5)

PIC32MX110F016C
PIC32MX120F032C
PIC32MX130F064C
PIC32MX150F128C

36

1

Pin #	Full Pin Name	Pin #	Full Pin Name
1	AN4/C1INB/C2IND/RPB2/SDA2/CTED13/RB2	19	TDO/RPB9/SDA1/CTED4/PMD3/RB9
2	AN5/C1INA/C2INC/RTCC/RPB3/SCL2/RB3	20	RPC9/CTED7/RC9
3	PGED4(4)/AN6/RPC0/RC0	21	VSS
4	PGEC4(4)/AN7/RPC1/RC1	22	VCAP
5	VDD	23	VDD
6	VSS	24	PGED2/RPB10/CTED11/PMD2/RB10
7	OSC1/CLKI/RPA2/RA2	25	PGEC2/TMS/RPB11/PMD1/RB11
8	OSC2/CLKO/RPA3/PMA0/RA3	26	AN12/PMD0/RB12
9	SOSCI/RPB4/RB4	27	AN11/RPB13/CTPLS/PMRD/RB13
10	SOSCO/RPA4/T1CK/CTED9/PMA1/RA4	28	CVREFOUT/AN10/C3INB/RPB14/SCK1/CTED5/PMWR/RB14
11	RPC3/RC3	29	AN9/C3INA/RPB15/SCK2/CTED6/PMCS1/RB15
12	VSS	30	AVSS
13	VDD	31	AVDD
14	VDD	32	$\overline{\text{MCLR}}$
15	PGED3/RPB5/PMD7/RB5	33	VREF+/CVREF+/AN0/C3INC/RPA0/CTED1/RA0
16	PGEC3/RPB6/PMD6/RB6	34	VREF-/CVREF-/AN1/RPA1/CTED2/RA1
17	TDI/RPB7/CTED3/PMD5/INT0/RB7	35	PGED1/AN2/C1IND/C2INB/C3IND/RPB0/RB0
18	TCK/RPB8/SCL1/CTED10/PMD4/RB8	36	PGEC1/AN3/C1INC/C2INA/RPB1/CTED12/RB1

Note 1: The RPn pins can be used by remappable peripherals. See Table 1 for the available peripherals and **Section 11.3 "Peripheral Pin Select"** for restrictions.
2: Every I/O port pin (RAx-RCx) can be used as a change notification pin (CNAx-CNCx). See **Section 11.0 "I/O Ports"** for more information.
3: The metal plane at the bottom of the device is not connected to any pins and is recommended to be connected to VSS externally.
4: This pin function is not available on PIC32MX110F016C and PIC32MX120F032C devices.
5: Shaded pins are 5V tolerant.

© 2011-2016 Microchip Technology Inc.

TABLE 1-1: PINOUT I/O DESCRIPTIONS (CONTINUED)

Pin Name	Pin Number(1)				Pin Type	Buffer Type	Description
	28-pin QFN	28-pin SSOP/ SPDIP/ SOIC	36-pin VTLA	44-pin QFN/ TQFP/ VTLA			
OC1	PPS	PPS	PPS	PPS	O	—	Output Compare Output 1
OC2	PPS	PPS	PPS	PPS	O	—	Output Compare Output 2
OC3	PPS	PPS	PPS	PPS	O	—	Output Compare Output 3
OC4	PPS	PPS	PPS	PPS	O	—	Output Compare Output 4
OC5	PPS	PPS	PPS	PPS	O	—	Output Compare Output 5
OCFA	PPS	PPS	PPS	PPS	I	ST	Output Compare Fault A Input
OCFB	PPS	PPS	PPS	PPS	I	ST	Output Compare Fault B Input
INT0	13	16	17	43	I	ST	External Interrupt 0
INT1	PPS	PPS	PPS	PPS	I	ST	External Interrupt 1
INT2	PPS	PPS	PPS	PPS	I	ST	External Interrupt 2
INT3	PPS	PPS	PPS	PPS	I	ST	External Interrupt 3
INT4	PPS	PPS	PPS	PPS	I	ST	External Interrupt 4
RA0	27	2	33	19	I/O	ST	PORTA is a bidirectional I/O port
RA1	28	3	34	20	I/O	ST	
RA2	6	9	7	30	I/O	ST	
RA3	7	10	8	31	I/O	ST	
RA4	9	12	10	34	I/O	ST	
RA7	—	—	—	13	I/O	ST	
RA8	—	—	—	32	I/O	ST	
RA9	—	—	—	35	I/O	ST	
RA10	—	—	—	12	I/O	ST	
RB0	1	4	35	21	I/O	ST	PORTB is a bidirectional I/O port
RB1	2	5	36	22	I/O	ST	
RB2	3	6	1	23	I/O	ST	
RB3	4	7	2	24	I/O	ST	
RB4	8	11	9	33	I/O	ST	
RB5	11	14	15	41	I/O	ST	
RB6	12(2)	15(2)	16(2)	42(2)	I/O	ST	
RB7	13	16	17	43	I/O	ST	
RB8	14	17	18	44	I/O	ST	
RB9	15	18	19	1	I/O	ST	
RB10	18	21	24	8	I/O	ST	
RB11	19	22	25	9	I/O	ST	
RB12	20(2)	23(2)	26(2)	10(2)	I/O	ST	
RB13	21	24	27	11	I/O	ST	
RB14	22	25	28	14	I/O	ST	
RB15	23	26	29	15	I/O	ST	

Legend: CMOS = CMOS compatible input or output; ST = Schmitt Trigger input with CMOS levels; TTL = TTL input buffer; Analog = Analog input; O = Output; PPS = Peripheral Pin Select; P = Power; I = Input; — = N/A

Note 1: Pin numbers are provided for reference only. See the **"Pin Diagrams"** section for device pin availability.

2: Pin number for PIC32MX1XX devices only.

3: Pin number for PIC32MX2XX devices only.

TABLE 1-1: PINOUT I/O DESCRIPTIONS (CONTINUED)

Pin Name	Pin Number(1)				Pin Type	Buffer Type	Description
	28-pin QFN	28-pin SSOP/ SPDIP/ SOIC	36-pin VTLA	44-pin QFN/ TQFP/ VTLA			
USBID	11(3)	14(3)	15(3)	41(3)	I	ST	USB OTG ID detect
CTED1	27	2	33	19	I	ST	CTMU External Edge Input
CTED2	28	3	34	20	I	ST	
CTED3	13	16	17	43	I	ST	
CTED4	15	18	19	1	I	ST	
CTED5	22	25	28	14	I	ST	
CTED6	23	26	29	15	I	ST	
CTED7	—	—	20	5	I	ST	
CTED8	—	—	—	13	I	ST	
CTED9	9	12	10	34	I	ST	
CTED10	14	17	18	44	I	ST	
CTED11	18	21	24	8	I	ST	
CTED12	2	5	36	22	I	ST	
CTED13	3	6	1	23	I	ST	
CTPLS	21	24	27	11	O	—	CTMU Pulse Output
PGED1	1	4	35	21	I/O	ST	Data I/O pin for Programming/Debugging Communication Channel 1
PGEC1	2	5	36	22	I	ST	Clock input pin for Programming/Debugging Communication Channel 1
PGED2	18	21	24	8	I/O	ST	Data I/O pin for Programming/Debugging Communication Channel 2
PGEC2	19	22	25	9	I	ST	Clock input pin for Programming/Debugging Communication Channel 2
PGED3	11(2)	14(2)	15(2)	41(2)	I/O	ST	Data I/O pin for Programming/Debugging Communication Channel 3
	27(3)	2(3)	33(3)	19(3)			
PGEC3	12(2)	15(2)	16(2)	42(2)	I	ST	Clock input pin for Programming/ Debugging Communication Channel 3
	28(3)	3(3)	34(3)	20(3)			
PGED4	—	—	3	12	I/O	ST	Data I/O pin for Programming/Debugging Communication Channel 4
PGEC4	—	—	4	13	I	ST	Clock input pin for Programming/ Debugging Communication Channel 4

Legend: CMOS = CMOS compatible input or output; ST = Schmitt Trigger input with CMOS levels; TTL = TTL input buffer; Analog = Analog input; O = Output; PPS = Peripheral Pin Select; P = Power; I = Input; — = N/A

Note 1: Pin numbers are provided for reference only. See the **"Pin Diagrams"** section for device pin availability.

2: Pin number for PIC32MX1XX devices only.

3: Pin number for PIC32MX2XX devices only.

FIGURE 4-3: MEMORY MAP ON RESET FOR PIC32MX130/230 DEVICES (16 KB RAM, 64 KB FLASH)

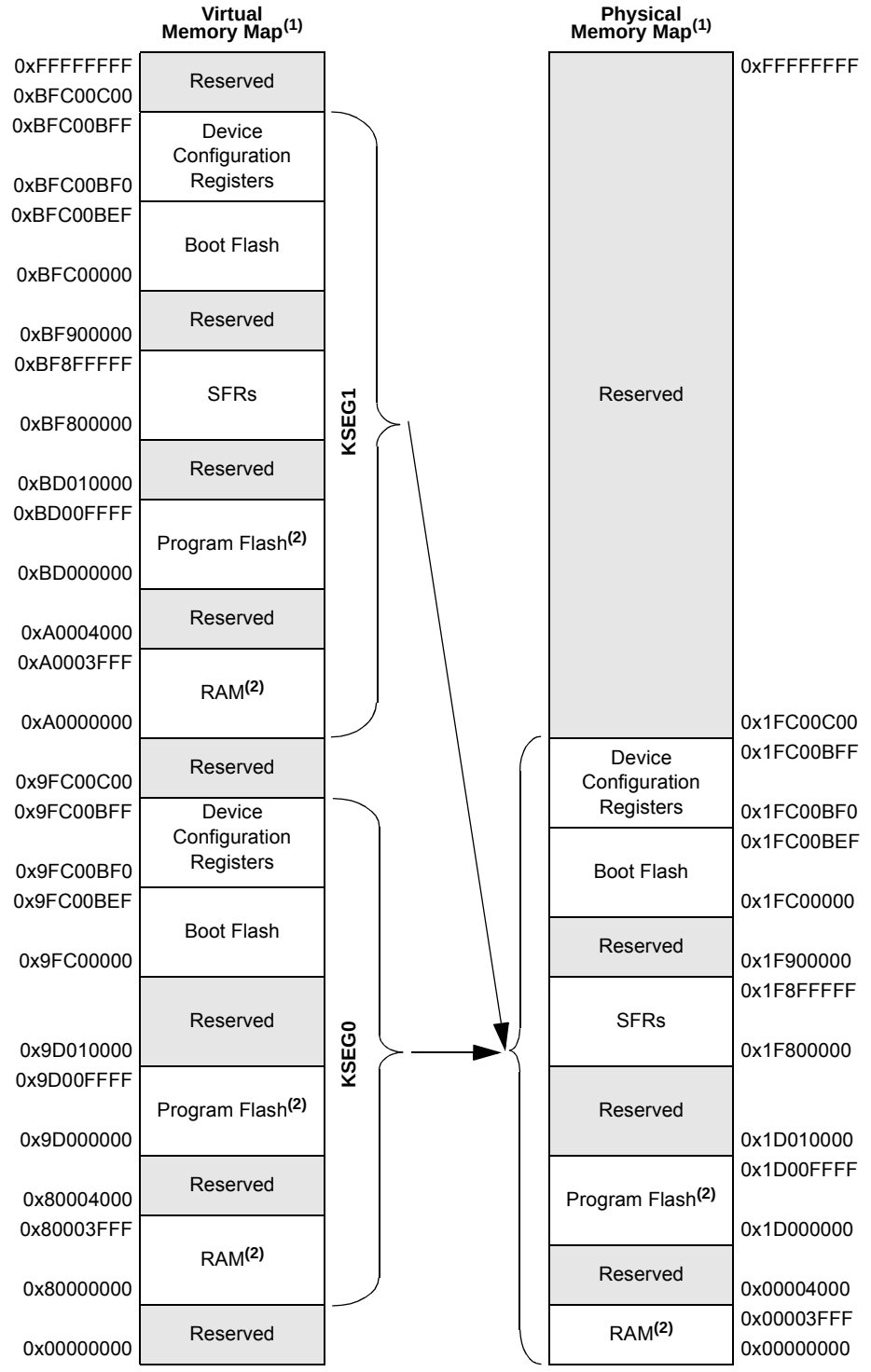

Note 1: Memory areas are not shown to scale.

2: The size of this memory region is programmable (see **Section 3. "Memory Organization"** (DS60001115) in the *"PIC32 Family Reference Manual"*) and can be changed by initialization code provided by end-user development tools (refer to the specific development tool documentation for information).

© 2011-2016 Microchip Technology Inc.

REGISTER 8-3: REFOCON: REFERENCE OSCILLATOR CONTROL REGISTER

bit 3-0 **ROSEL<3:0>:** Reference Clock Source Select bits(1)

1111 = Reserved; do not use
•
•
•
1001 = Reserved; do not use
1000 = REFCLKI
0111 = System PLL output
0110 = USB PLL output
0101 = SOSC
0100 = LPRC
0011 = FRC
0010 = POSC
0001 = PBCLK
0000 = SYSCLK

Note 1: The ROSEL and RODIV bits should not be written while the ACTIVE bit is '1', as undefined behavior may result.

2: This bit is ignored when the ROSEL<3:0> bits = 0000 or 0001.

3: While the ON bit is set to '1', writes to these bits do not take effect until the DIVSWEN bit is also set to '1'.

TABLE 9-3: DMA CHANNELS 0-3 REGISTER MAP (CONTINUED)

Virtual Address (BF88_#)	Register Name(1)	Bit Range	Bits 31/15	30/14	29/13	28/12	27/11	26/10	25/9	24/8	23/7	22/6	21/5	20/4	19/3	18/2	17/1	16/0	All Resets
3170	DCH1SSIZ	31:16	—	—	—	—	—	—	—	—	—	—	—	—	—	—	—	—	0000
		15:0	CHSSIZ<15:0>																0000
3180	DCH1DSIZ	31:16	—	—	—	—	—	—	—	—	—	—	—	—	—	—	—	—	0000
		15:0	CHDSIZ<15:0>																0000
3190	DCH1SPTR	31:16	—	—	—	—	—	—	—	—	—	—	—	—	—	—	—	—	0000
		15:0	CHSPTR<15:0>																0000
31A0	DCH1DPTR	31:16	—	—	—	—	—	—	—	—	—	—	—	—	—	—	—	—	0000
		15:0	CHDPTR<15:0>																0000
31B0	DCH1CSIZ	31:16	—	—	—	—	—	—	—	—	—	—	—	—	—	—	—	—	0000
		15:0	CHCSIZ<15:0>																0000
31C0	DCH1CPTR	31:16	—	—	—	—	—	—	—	—	—	—	—	—	—	—	—	—	0000
		15:0	CHCPTR<15:0>																0000
31D0	DCH1DAT	31:16	—	—	—	—	—	—	—	—	—	—	—	—	—	—	—	—	0000
		15:0	—	—	—	—	—	—	—	—	CHPDAT<7:0>								0000
31E0	DCH2CON	31:16	—	—	—	—	—	—	—	—	—	—	—	—	—	—	—	—	0000
		15:0	CHBUSY	—	—	—	—	—	—	CHCHNS	CHEN	CHAED	CHCHN	CHAEN	—	CHEDET	CHPRI<1:0>		0000
31F0	DCH2ECON	31:16	—	—	—	—	—	—	—	—	CHAIRQ<7:0>								00FF
		15:0	CHSIRQ<7:0>								CFORCE	CABORT	PATEN	SIRQEN	AIRQEN	—	—	—	FF00
3200	DCH2INT	31:16	—	—	—	—	—	—	—	—	CHSDIE	CHSHIE	CHDDIE	CHDHIE	CHBCIE	CHCCIE	CHTAIE	CHERIE	0000
		15:0	—	—	—	—	—	—	—	—	CHSDIF	CHSHIF	CHDDIF	CHDHIF	CHBCIF	CHCCIF	CHTAIF	CHERIF	0000
3210	DCH2SSA	31:16	CHSSA<31:0>																0000
		15:0																	0000
3220	DCH2DSA	31:16	CHDSA<31:0>																0000
		15:0																	0000
3230	DCH2SSIZ	31:16	—	—	—	—	—	—	—	—	—	—	—	—	—	—	—	—	0000
		15:0	CHSSIZ<15:0>																0000
3240	DCH2DSIZ	31:16	—	—	—	—	—	—	—	—	—	—	—	—	—	—	—	—	0000
		15:0	CHDSIZ<15:0>																0000
3250	DCH2SPTR	31:16	—	—	—	—	—	—	—	—	—	—	—	—	—	—	—	—	0000
		15:0	CHSPTR<15:0>																0000
3260	DCH2DPTR	31:16	—	—	—	—	—	—	—	—	—	—	—	—	—	—	—	—	0000
		15:0	CHDPTR<15:0>																0000
3270	DCH2CSIZ	31:16	—	—	—	—	—	—	—	—	—	—	—	—	—	—	—	—	0000
		15:0	CHCSIZ<15:0>																0000

Legend: x = unknown value on Reset; — = unimplemented, read as '0'. Reset values are shown in hexadecimal.

Note 1: All registers in this table have corresponding CLR, SET and INV registers at their virtual addresses, plus offsets of 0x4, 0x8 and 0xC, respectively. See **Section 11.2 "CLR, SET and INV Registers"** for more information.

© 2011-2016 Microchip Technology Inc.

TABLE 9-3: DMA CHANNELS 0-3 REGISTER MAP (CONTINUED)

Virtual Address (BF88_#)	Register Name(1)	Bit Range	Bits 31/15	30/14	29/13	28/12	27/11	26/10	25/9	24/8	23/7	22/6	21/5	20/4	19/3	18/2	17/1	16/0	All Resets
3280	DCH2CPTR	31:16	—	—	—	—	—	—	—	—	—	—	—	—	—	—	—	—	0000
		15:0	CHCPTR<15:0>																0000
3290	DCH2DAT	31:16	—	—	—	—	—	—	—	—	—	—	—	—	—	—	—	—	0000
		15:0	—	—	—	—	—	—	—	—	CHPDAT<7:0>								0000
32A0	DCH3CON	31:16	—	—	—	—	—	—	—	—	—	—	—	—	—	—	—	—	0000
		15:0	CHBUSY	—	—	—	—	—	—	CHCHNS	CHEN	CHAED	CHCHN	CHAEN	—	CHEDET	CHPRI<1:0>		0000
32B0	DCH3ECON	31:16	—	—	—	—	—	—	—	—	CHAIRQ<7:0>								00FF
		15:0	CHSIRQ<7:0>								CFORCE	CABORT	PATEN	SIRQEN	AIRQEN	—	—	—	FF00
32C0	DCH3INT	31:16	—	—	—	—	—	—	—	—	CHSDIE	CHSHIE	CHDDIE	CHDHIE	CHBCIE	CHCCIE	CHTAIE	CHERIE	0000
		15:0	—	—	—	—	—	—	—	—	CHSDIF	CHSHIF	CHDDIF	CHDHIF	CHBCIF	CHCCIF	CHTAIF	CHERIF	0000
32D0	DCH3SSA	31:16	CHSSA<31:0>																0000
		15:0																	0000
32E0	DCH3DSA	31:16	CHDSA<31:0>																0000
		15:0																	0000
32F0	DCH3SSIZ	31:16	—	—	—	—	—	—	—	—	—	—	—	—	—	—	—	—	0000
		15:0	CHSSIZ<15:0>																0000
3300	DCH3DSIZ	31:16	—	—	—	—	—	—	—	—	—	—	—	—	—	—	—	—	0000
		15:0	CHDSIZ<15:0>																0000
3310	DCH3SPTR	31:16	—	—	—	—	—	—	—	—	—	—	—	—	—	—	—	—	0000
		15:0	CHSPTR<15:0>																0000
3320	DCH3DPTR	31:16	—	—	—	—	—	—	—	—	—	—	—	—	—	—	—	—	0000
		15:0	CHDPTR<15:0>																0000
3330	DCH3CSIZ	31:16	—	—	—	—	—	—	—	—	—	—	—	—	—	—	—	—	0000
		15:0	CHCSIZ<15:0>																0000
3340	DCH3CPTR	31:16	—	—	—	—	—	—	—	—	—	—	—	—	—	—	—	—	0000
		15:0	CHCPTR<15:0>																0000
3350	DCH3DAT	31:16	—	—	—	—	—	—	—	—	—	—	—	—	—	—	—	—	0000
		15:0	—	—	—	—	—	—	—	—	CHPDAT<7:0>								0000

Legend: x = unknown value on Reset; — = unimplemented, read as '0'. Reset values are shown in hexadecimal.

Note 1: All registers in this table have corresponding CLR, SET and INV registers at their virtual addresses, plus offsets of 0x4, 0x8 and 0xC, respectively. See **Section 11.2 "CLR, SET and INV Registers"** for more information.

© 2011-2016 Microchip Technology Inc.

REGISTER 9-5: DCRCDATA: DMA CRC DATA REGISTER

Bit Range	Bit 31/23/15/7	Bit 30/22/14/6	Bit 29/21/13/5	Bit 28/20/12/4	Bit 27/19/11/3	Bit 26/18/10/2	Bit 25/17/9/1	Bit 24/16/8/0
31:24	R/W-0	R/W-0	R/W-0	R/W-0	R/W-0	R/W-0	R/W-0	R/W-0
	DCRCDATA<31:24>							
23:16	R/W-0	R/W-0	R/W-0	R/W-0	R/W-0	R/W-0	R/W-0	R/W-0
	DCRCDATA<23:16>							
15:8	R/W-0	R/W-0	R/W-0	R/W-0	R/W-0	R/W-0	R/W-0	R/W-0
	DCRCDATA<15:8>							
7:0	R/W-0	R/W-0	R/W-0	R/W-0	R/W-0	R/W-0	R/W-0	R/W-0
	DCRCDATA<7:0>							

Legend:			
R = Readable bit	W = Writable bit	U = Unimplemented bit, read as ‘0’	
-n = Value at POR	‘1’ = Bit is set	‘0’ = Bit is cleared	x = Bit is unknown

bit 31-0 **DCRCDATA<31:0>:** CRC Data Register bits

Writing to this register will seed the CRC generator. Reading from this register will return the current value of the CRC. Bits greater than PLEN will return ‘0’ on any read.

When CRCTYP (DCRCCON<15>) = 1 (CRC module is in IP Header mode):
Only the lower 16 bits contain IP header checksum information. The upper 16 bits are always ‘0’. Data written to this register is converted and read back in 1’s complement form (i.e., current IP header checksum value).

When CRCTYP (DCRCCON<15>) = 0 (CRC module is in LFSR mode):
Bits greater than PLEN will return ‘0’ on any read.

REGISTER 9-6: DCRCXOR: DMA CRCXOR ENABLE REGISTER

Bit Range	Bit 31/23/15/7	Bit 30/22/14/6	Bit 29/21/13/5	Bit 28/20/12/4	Bit 27/19/11/3	Bit 26/18/10/2	Bit 25/17/9/1	Bit 24/16/8/0
31:24	R/W-0	R/W-0	R/W-0	R/W-0	R/W-0	R/W-0	R/W-0	R/W-0
	DCRCXOR<31:24>							
23:16	R/W-0	R/W-0	R/W-0	R/W-0	R/W-0	R/W-0	R/W-0	R/W-0
	DCRCXOR<23:16>							
15:8	R/W-0	R/W-0	R/W-0	R/W-0	R/W-0	R/W-0	R/W-0	R/W-0
	DCRCXOR<15:8>							
7:0	R/W-0	R/W-0	R/W-0	R/W-0	R/W-0	R/W-0	R/W-0	R/W-0
	DCRCXOR<7:0>							

Legend:			
R = Readable bit	W = Writable bit	U = Unimplemented bit, read as ‘0’	
-n = Value at POR	‘1’ = Bit is set	‘0’ = Bit is cleared	x = Bit is unknown

bit 31-0 **DCRCXOR<31:0>:** CRC XOR Register bits

When CRCTYP (DCRCCON<15>) = 1 (CRC module is in IP Header mode):
This register is unused.

When CRCTYP (DCRCCON<15>) = 0 (CRC module is in LFSR mode):
1 = Enable the XOR input to the Shift register
0 = Disable the XOR input to the Shift register; data is shifted in directly from the previous stage in the register

© 2011-2016 Microchip Technology Inc.

REGISTER 9-9: DCHxINT: DMA CHANNEL 'x' INTERRUPT CONTROL REGISTER

Bit Range	Bit 31/23/15/7	Bit 30/22/14/6	Bit 29/21/13/5	Bit 28/20/12/4	Bit 27/19/11/3	Bit 26/18/10/2	Bit 25/17/9/1	Bit 24/16/8/0
31:24	U-0	U-0	U-0	U-0	U-0	U-0	U-0	U-0
	—	—	—	—	—	—	—	—
23:16	R/W-0	R/W-0	R/W-0	R/W-0	R/W-0	R/W-0	R/W-0	R/W-0
	CHSDIE	CHSHIE	CHDDIE	CHDHIE	CHBCIE	CHCCIE	CHTAIE	CHERIE
15:8	U-0	U-0	U-0	U-0	U-0	U-0	U-0	U-0
	—	—	—	—	—	—	—	—
7:0	R/W-0	R/W-0	R/W-0	R/W-0	R/W-0	R/W-0	R/W-0	R/W-0
	CHSDIF	CHSHIF	CHDDIF	CHDHIF	CHBCIF	CHCCIF	CHTAIF	CHERIF

Legend:			
R = Readable bit	W = Writable bit	U = Unimplemented bit, read as '0'	
-n = Value at POR	'1' = Bit is set	'0' = Bit is cleared	x = Bit is unknown

bit 31-24 **Unimplemented:** Read as '0'

bit 23 **CHSDIE:** Channel Source Done Interrupt Enable bit
1 = Interrupt is enabled
0 = Interrupt is disabled

bit 22 **CHSHIE:** Channel Source Half Empty Interrupt Enable bit
1 = Interrupt is enabled
0 = Interrupt is disabled

bit 21 **CHDDIE:** Channel Destination Done Interrupt Enable bit
1 = Interrupt is enabled
0 = Interrupt is disabled

bit 20 **CHDHIE:** Channel Destination Half Full Interrupt Enable bit
1 = Interrupt is enabled
0 = Interrupt is disabled

bit 19 **CHBCIE:** Channel Block Transfer Complete Interrupt Enable bit
1 = Interrupt is enabled
0 = Interrupt is disabled

bit 18 **CHCCIE:** Channel Cell Transfer Complete Interrupt Enable bit
1 = Interrupt is enabled
0 = Interrupt is disabled

bit 17 **CHTAIE:** Channel Transfer Abort Interrupt Enable bit
1 = Interrupt is enabled
0 = Interrupt is disabled

bit 16 **CHERIE:** Channel Address Error Interrupt Enable bit
1 = Interrupt is enabled
0 = Interrupt is disabled

bit 15-8 **Unimplemented:** Read as '0'

bit 7 **CHSDIF:** Channel Source Done Interrupt Flag bit
1 = Channel Source Pointer has reached end of source (CHSPTR = CHSSIZ)
0 = No interrupt is pending

bit 6 **CHSHIF:** Channel Source Half Empty Interrupt Flag bit
1 = Channel Source Pointer has reached midpoint of source (CHSPTR = CHSSIZ/2)
0 = No interrupt is pending

bit 5 **CHDDIF:** Channel Destination Done Interrupt Flag bit
1 = Channel Destination Pointer has reached end of destination (CHDPTR = CHDSIZ)
0 = No interrupt is pending

TABLE 10-1: USB REGISTER MAP (CONTINUED)

Virtual Address (BF88_#)	Register Name(1)	Bit Range	Bits 31/15	30/14	29/13	28/12	27/11	26/10	25/9	24/8	23/7	22/6	21/5	20/4	19/3	18/2	17/1	16/0	All Resets
5280	U1FRML(3)	31:16	—	—	—	—	—	—	—	—	—	—	—	—	—	—	—	—	0000
		15:0	—	—	—	—	—	—	—	—	FRML<7:0>								0000
5290	U1FRMH(3)	31:16	—	—	—	—	—	—	—	—	—	—	—	—	—	—	—	—	0000
		15:0	—	—	—	—	—	—	—	—	—	—	—	—	—	FRMH<2:0>			0000
52A0	U1TOK	31:16	—	—	—	—	—	—	—	—	—	—	—	—	—	—	—	—	0000
		15:0	—	—	—	—	—	—	—	—	PID<3:0>				EP<3:0>				0000
52B0	U1SOF	31:16	—	—	—	—	—	—	—	—	—	—	—	—	—	—	—	—	0000
		15:0	—	—	—	—	—	—	—	—	CNT<7:0>								0000
52C0	U1BDTP2	31:16	—	—	—	—	—	—	—	—	—	—	—	—	—	—	—	—	0000
		15:0	—	—	—	—	—	—	—	—	BDTPTRH<7:0>								0000
52D0	U1BDTP3	31:16	—	—	—	—	—	—	—	—	—	—	—	—	—	—	—	—	0000
		15:0	—	—	—	—	—	—	—	—	BDTPTRU<7:0>								0000
52E0	U1CNFG1	31:16	—	—	—	—	—	—	—	—	—	—	—	—	—	—	—	—	0000
		15:0	—	—	—	—	—	—	—	—	UTEYE	UOEMON	—	USBSIDL	—	—	—	UASUSPND	0001
5300	U1EP0	31:16	—	—	—	—	—	—	—	—	—	—	—	—	—	—	—	—	0000
		15:0	—	—	—	—	—	—	—	—	LSPD	RETRYDIS	—	EPCONDIS	EPRXEN	EPTXEN	EPSTALL	EPHSHK	0000
5310	U1EP1	31:16	—	—	—	—	—	—	—	—	—	—	—	—	—	—	—	—	0000
		15:0	—	—	—	—	—	—	—	—	—	—	—	EPCONDIS	EPRXEN	EPTXEN	EPSTALL	EPHSHK	0000
5320	U1EP2	31:16	—	—	—	—	—	—	—	—	—	—	—	—	—	—	—	—	0000
		15:0	—	—	—	—	—	—	—	—	—	—	—	EPCONDIS	EPRXEN	EPTXEN	EPSTALL	EPHSHK	0000
5330	U1EP3	31:16	—	—	—	—	—	—	—	—	—	—	—	—	—	—	—	—	0000
		15:0	—	—	—	—	—	—	—	—	—	—	—	EPCONDIS	EPRXEN	EPTXEN	EPSTALL	EPHSHK	0000
5340	U1EP4	31:16	—	—	—	—	—	—	—	—	—	—	—	—	—	—	—	—	0000
		15:0	—	—	—	—	—	—	—	—	—	—	—	EPCONDIS	EPRXEN	EPTXEN	EPSTALL	EPHSHK	0000
5350	U1EP5	31:16	—	—	—	—	—	—	—	—	—	—	—	—	—	—	—	—	0000
		15:0	—	—	—	—	—	—	—	—	—	—	—	EPCONDIS	EPRXEN	EPTXEN	EPSTALL	EPHSHK	0000
5360	U1EP6	31:16	—	—	—	—	—	—	—	—	—	—	—	—	—	—	—	—	0000
		15:0	—	—	—	—	—	—	—	—	—	—	—	EPCONDIS	EPRXEN	EPTXEN	EPSTALL	EPHSHK	0000
5370	U1EP7	31:16	—	—	—	—	—	—	—	—	—	—	—	—	—	—	—	—	0000
		15:0	—	—	—	—	—	—	—	—	—	—	—	EPCONDIS	EPRXEN	EPTXEN	EPSTALL	EPHSHK	0000
5380	U1EP8	31:16	—	—	—	—	—	—	—	—	—	—	—	—	—	—	—	—	0000
		15:0	—	—	—	—	—	—	—	—	—	—	—	EPCONDIS	EPRXEN	EPTXEN	EPSTALL	EPHSHK	0000

Legend: x = unknown value on Reset; — = unimplemented, read as '0'. Reset values are shown in hexadecimal.

Note 1: With the exception of those noted, all registers in this table (except as noted) have corresponding CLR, SET and INV registers at their virtual address, plus an offset of 0x4, 0x8, and 0xC respectively. See **Section 11.2 "CLR, SET and INV Registers"** for more information.

2: This register does not have associated SET and INV registers.

3: This register does not have associated CLR, SET and INV registers.

4: Reset value for this bit is undefined.

© 2011-2016 Microchip Technology Inc.

TABLE 11-7: PERIPHERAL PIN SELECT OUTPUT REGISTER MAP

Virtual Address (BF80_#)	Register Name	Bit Range	Bits																All Resets
			31/15	30/14	29/13	28/12	27/11	26/10	25/9	24/8	23/7	22/6	21/5	20/4	19/3	18/2	17/1	16/0	
FB00	RPA0R	31:16	—	—	—	—	—	—	—	—	—	—	—	—	—	—	—	—	0000
		15:0	—	—	—	—	—	—	—	—	—	—	—	—	RPA0<3:0>				0000
FB04	RPA1R	31:16	—	—	—	—	—	—	—	—	—	—	—	—	—	—	—	—	0000
		15:0	—	—	—	—	—	—	—	—	—	—	—	—	RPA1<3:0>				0000
FB08	RPA2R	31:16	—	—	—	—	—	—	—	—	—	—	—	—	—	—	—	—	0000
		15:0	—	—	—	—	—	—	—	—	—	—	—	—	RPA2<3:0>				0000
FB0C	RPA3R	31:16	—	—	—	—	—	—	—	—	—	—	—	—	—	—	—	—	0000
		15:0	—	—	—	—	—	—	—	—	—	—	—	—	RPA3<3:0>				0000
FB10	RPA4R	31:16	—	—	—	—	—	—	—	—	—	—	—	—	—	—	—	—	0000
		15:0	—	—	—	—	—	—	—	—	—	—	—	—	RPA4<3:0>				0000
FB20	RPA8R(1)	31:16	—	—	—	—	—	—	—	—	—	—	—	—	—	—	—	—	0000
		15:0	—	—	—	—	—	—	—	—	—	—	—	—	RPA8<3:0>				0000
FB24	RPA9R(1)	31:16	—	—	—	—	—	—	—	—	—	—	—	—	—	—	—	—	0000
		15:0	—	—	—	—	—	—	—	—	—	—	—	—	RPA9<3:0>				0000
FB2C	RPB0R	31:16	—	—	—	—	—	—	—	—	—	—	—	—	—	—	—	—	0000
		15:0	—	—	—	—	—	—	—	—	—	—	—	—	RPB0<3:0>				0000
FB30	RPB1R	31:16	—	—	—	—	—	—	—	—	—	—	—	—	—	—	—	—	0000
		15:0	—	—	—	—	—	—	—	—	—	—	—	—	RPB1<3:0>				0000
FB34	RPB2R	31:16	—	—	—	—	—	—	—	—	—	—	—	—	—	—	—	—	0000
		15:0	—	—	—	—	—	—	—	—	—	—	—	—	RPB2<3:0>				0000
FB38	RPB3R	31:16	—	—	—	—	—	—	—	—	—	—	—	—	—	—	—	—	0000
		15:0	—	—	—	—	—	—	—	—	—	—	—	—	RPB3<3:0>				0000
FB3C	RPB4R	31:16	—	—	—	—	—	—	—	—	—	—	—	—	—	—	—	—	0000
		15:0	—	—	—	—	—	—	—	—	—	—	—	—	RPB4<3:0>				0000
FB40	RPB5R	31:16	—	—	—	—	—	—	—	—	—	—	—	—	—	—	—	—	0000
		15:0	—	—	—	—	—	—	—	—	—	—	—	—	RPB5<3:0>				0000
FB44	RPB6R(2)	31:16	—	—	—	—	—	—	—	—	—	—	—	—	—	—	—	—	0000
		15:0	—	—	—	—	—	—	—	—	—	—	—	—	RPB6<3:0>				0000
FB48	RPB7R	31:16	—	—	—	—	—	—	—	—	—	—	—	—	—	—	—	—	0000
		15:0	—	—	—	—	—	—	—	—	—	—	—	—	RPB7<3:0>				0000

Legend: x = unknown value on Reset; — = unimplemented, read as '0'. Reset values are shown in hexadecimal.

Note 1: This register is only available on 44-pin devices.
2: This register is only available on PIC32MX1XX devices.
3: This register is only available on 36-pin and 44-pin devices.

© 2011-2016 Microchip Technology Inc.

FIGURE 13-2: TIMER2/3, TIMER4/5 BLOCK DIAGRAM (32-BIT)

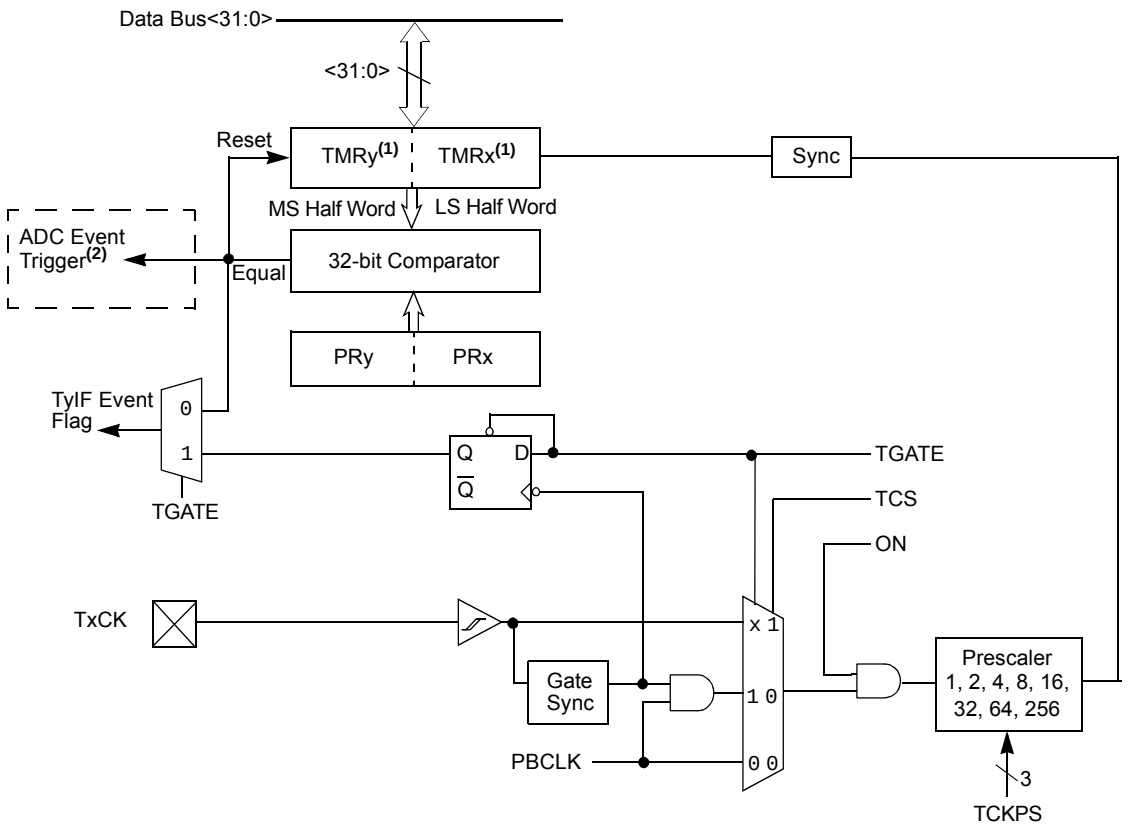

Note 1: In this diagram, the use of ‘x’ in registers, TxCON, TMRx, PRx and TxCK, refers to either Timer2 or Timer4; the use of ‘y’ in registers, TyCON, TMRy, PRy, TyIF, refers to either Timer3 or Timer5.

2: ADC event trigger is available only on the Timer2/3 pair.

© 2011-2016 Microchip Technology Inc.

REGISTER 14-1: WDTCON: WATCHDOG TIMER CONTROL REGISTER

Bit Range	Bit 31/23/15/7	Bit 30/22/14/6	Bit 29/21/13/5	Bit 28/20/12/4	Bit 27/19/11/3	Bit 26/18/10/2	Bit 25/17/9/1	Bit 24/16/8/0
31:24	U-0	U-0	U-0	U-0	U-0	U-0	U-0	U-0
	—	—	—	—	—	—	—	—
23:16	U-0	U-0	U-0	U-0	U-0	U-0	U-0	U-0
	—	—	—	—	—	—	—	—
15:8	R/W-0	U-0	U-0	U-0	U-0	U-0	U-0	U-0
	ON(1,2)	—	—	—	—	—	—	—
7:0	U-0	R-y	R-y	R-y	R-y	R-y	R/W-0	R/W-0
	—	SWDTPS<4:0>					WDTWINEN	WDTCLR

Legend:	y = Values set from Configuration bits on POR		
R = Readable bit	W = Writable bit	U = Unimplemented bit, read as ‘0’	
-n = Value at POR	‘1’ = Bit is set	‘0’ = Bit is cleared	x = Bit is unknown

bit 31-16 **Unimplemented:** Read as ‘0’

bit 15 **ON:** Watchdog Timer Enable bit(1,2)
1 = Enables the WDT if it is not enabled by the device configuration
0 = Disable the WDT if it was enabled in software

bit 14-7 **Unimplemented:** Read as ‘0’

bit 6-2 **SWDTPS<4:0>:** Shadow Copy of Watchdog Timer Postscaler Value from Device Configuration bits
On reset, these bits are set to the values of the WDTPS <4:0> of Configuration bits.

bit 1 **WDTWINEN:** Watchdog Timer Window Enable bit
1 = Enable windowed Watchdog Timer
0 = Disable windowed Watchdog Timer

bit 0 **WDTCLR:** Watchdog Timer Reset bit
1 = Writing a ‘1’ will clear the WDT
0 = Software cannot force this bit to a ‘0’

Note 1: A read of this bit results in a ‘1’ if the Watchdog Timer is enabled by the device configuration or software.

2: When using the 1:1 PBCLK divisor, the user’s software should not read or write the peripheral’s SFRs in the SYSCLK cycle immediately following the instruction that clears the module’s ON bit.

NOTES:

© 2011-2016 Microchip Technology Inc.

25.0 CHARGE TIME MEASUREMENT UNIT (CTMU)

Note: This data sheet summarizes the features of the PIC32MX1XX/2XX 28/36/44-pin Family of devices. It is not intended to be a comprehensive reference source. To complement the information in this data sheet, refer to **Section 37. "Charge Time Measurement Unit (CTMU)"** (DS60001167), which is available from the *Documentation > Reference Manual* section of the Microchip PIC32 web site (www.microchip.com/pic32).

The Charge Time Measurement Unit (CTMU) is a flexible analog module that has a configurable current source with a digital configuration circuit built around it. The CTMU can be used for differential time measurement between pulse sources and can be used for generating an asynchronous pulse. By working with other on-chip analog modules, the CTMU can be used for high resolution time measurement, measure capacitance, measure relative changes in capacitance or generate output pulses with a specific time delay. The CTMU is ideal for interfacing with capacitive-based sensors.

The CTMU module includes the following key features:

- Up to 13 channels available for capacitive or time measurement input
- On-chip precision current source
- 16-edge input trigger sources
- Selection of edge or level-sensitive inputs
- Polarity control for each edge source
- Control of edge sequence
- Control of response to edges
- High precision time measurement
- Time delay of external or internal signal asynchronous to system clock
- Integrated temperature sensing diode
- Control of current source during auto-sampling
- Four current source ranges
- Time measurement resolution of one nanosecond

A block diagram of the CTMU is shown in Figure 25-1.

FIGURE 25-1: CTMU BLOCK DIAGRAM

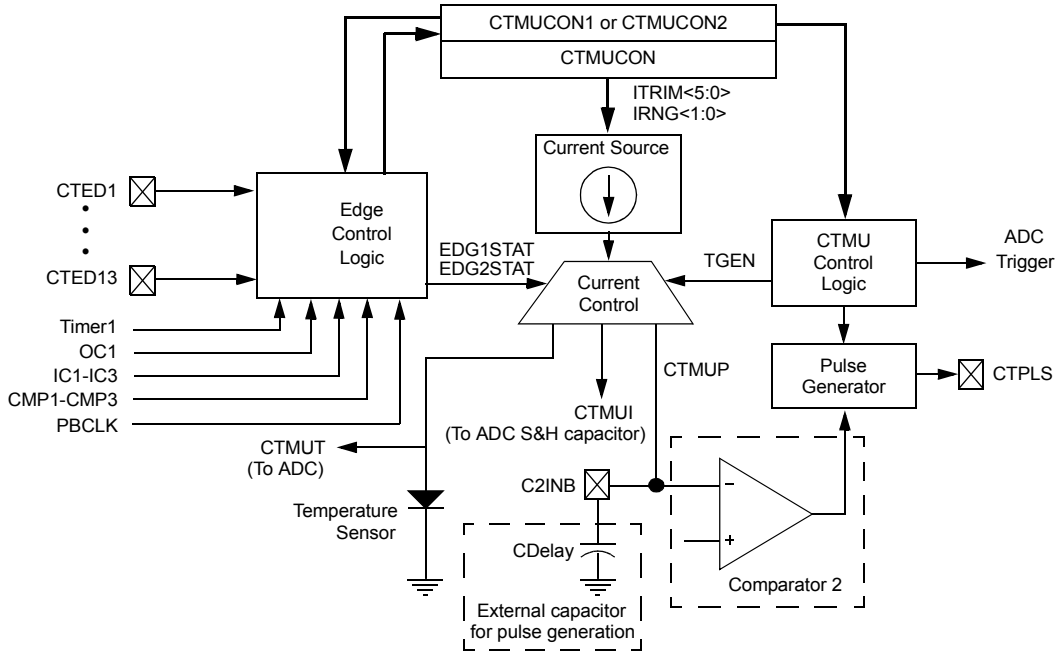

Current Control Selection	TGEN	EDG1STAT, EDG2STAT
CTMUT	0	EDG1STAT = EDG2STAT
CTMUI	0	EDG1STAT ≠ EDG2STAT
CTMUP	1	EDG1STAT ≠ EDG2STAT
No Connect	1	EDG1STAT = EDG2STAT

REGISTER 25-1: CTMUCON: CTMU CONTROL REGISTER (CONTINUED)

bit 10 **EDGSEQEN:** Edge Sequence Enable bit
1 = Edge1 must occur before Edge2 can occur
0 = No edge sequence is needed

bit 9 **IDISSEN:** Analog Current Source Control bit(2)
1 = Analog current source output is grounded
0 = Analog current source output is not grounded

bit 8 **CTTRIG:** Trigger Control bit
1 = Trigger output is enabled
0 = Trigger output is disabled

bit 7-2 **ITRIM<5:0>:** Current Source Trim bits
011111 = Maximum positive change from nominal current
011110
.
.
.
000001 = Minimum positive change from nominal current
000000 = Nominal current output specified by IRNG<1:0>
111111 = Minimum negative change from nominal current
.
.
.
100010
100001 = Maximum negative change from nominal current

bit 1-0 **IRNG<1:0>:** Current Range Select bits(3)
11 = 100 times base current
10 = 10 times base current
01 = Base current level
00 = 1000 times base current(4)

Note 1: When this bit is set for Pulse Delay Generation, the EDG2SEL<3:0> bits must be set to '1110' to select C2OUT.

2: The ADC module Sample and Hold capacitor is not automatically discharged between sample/conversion cycles. Software using the ADC as part of a capacitive measurement, must discharge the ADC capacitor before conducting the measurement. The IDISSEN bit, when set to '1', performs this function. The ADC module must be sampling while the IDISSEN bit is active to connect the discharge sink to the capacitor array.

3: Refer to the CTMU Current Source Specifications (Table 30-41) in **Section 30.0 "Electrical Characteristics"** for current values.

4: This bit setting is not available for the CTMU temperature diode.

TABLE 30-13: COMPARATOR SPECIFICATIONS

DC CHARACTERISTICS			Standard Operating Conditions (see Note 4): 2.3V to 3.6V (unless otherwise stated) Operating temperature -40°C ≤ TA ≤ +85°C for Industrial -40°C ≤ TA ≤ +105°C for V-temp				
Param. No.	**Symbol**	**Characteristics**	**Min.**	**Typical**	**Max.**	**Units**	**Comments**
D300	VIOFF	Input Offset Voltage	—	±7.5	±25	mV	AVDD = VDD, AVSS = VSS
D301	VICM	Input Common Mode Voltage	0	—	VDD	V	AVDD = VDD, AVSS = VSS **(Note 2)**
D302	CMRR	Common Mode Rejection Ratio	55	—	—	dB	Max VICM = (VDD - 1)V **(Note 2)**
D303A	TRESP	Large Signal Response Time	—	150	400	ns	AVDD = VDD, AVSS = VSS **(Note 1,2)**
D303B	TSRESP	Small Signal Response Time	—	1	—	μs	This is defined as an input step of 50 mV with 15 mV of overdrive **(Note 2)**
D304	ON2OV	Comparator Enabled to Output Valid	—	—	10	μs	Comparator module is configured before setting the comparator ON bit **(Note 2)**
D305	IVREF	Internal Voltage Reference	1.14	1.2	1.26	V	—
D312	TSET	Internal Comparator Voltage DRC Reference Setting time	—	—	10	μs	**(Note 3)**

Note 1: Response time measured with one comparator input at (VDD – 1.5)/2, while the other input transitions from VSS to VDD.

2: These parameters are characterized but not tested.

3: Settling time measured while CVRR = 1 and CVR<3:0> transitions from ‘0000’ to ‘1111’. This parameter is characterized, but not tested in manufacturing.

4: The Comparator module is functional at VBORMIN < VDD < VDDMIN, but with degraded performance. Unless otherwise stated, module functionality is tested, but not characterized.

44-Terminal Very Thin Leadless Array Package (TL) – 6x6x0.9 mm Body With Exposed Pad [VTLA]

Note: For the most current package drawings, please see the Microchip Packaging Specification located at http://www.microchip.com/packaging

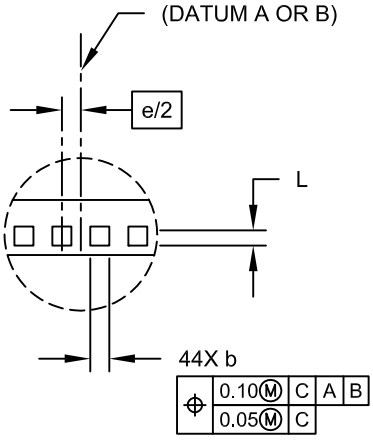

DETAIL A

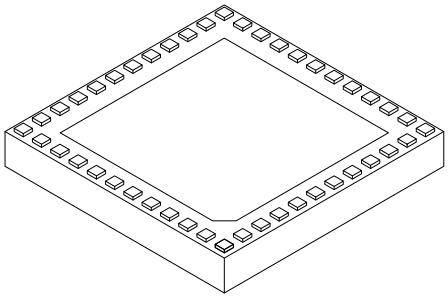

	Units	MILLIMETERS		
Dimension	Limits	MIN	NOM	MAX
Number of Pins	N		44	
Number of Pins per Side	ND		12	
Number of Pins per Side	NE		10	
Pitch	e		0.50 BSC	
Overall Height	A	0.80	0.90	1.00
Standoff	A1	0.025	-	0.075
Overall Width	E		6.00 BSC	
Exposed Pad Width	E2	4.40	4.55	4.70
Overall Length	D		6.00 BSC	
Exposed Pad Length	D2	4.40	4.55	4.70
Contact Width	b	0.20	0.25	0.30
Contact Length	L	0.20	0.25	0.30
Contact-to-Exposed Pad	K	0.20	-	-

Notes:

1. Pin 1 visual index feature may vary, but must be located within the hatched area.
2. Package is saw singulated.
3. Dimensioning and tolerancing per ASME Y14.5M.
   BSC: Basic Dimension. Theoretically exact value shown without tolerances.
   REF: Reference Dimension, usually without tolerance, for information purposes only.

Microchip Technology Drawing C04-157C Sheet 2 of 2

© 2011-2016 Microchip Technology Inc.

APPENDIX A: REVISION HISTORY

Revision A (May 2011)

This is the initial released version of this document.

Revision B (October 2011)

The following two global changes are included in this revision:

- All packaging references to VLAP have been changed to VTLA throughout the document
- All references to VCORE have been removed
- All occurrences of the ASCL1, ASCL2, ASDA1, and ASDA2 pins have been removed
- V-temp temperature range (-40ºC to +105ºC) was added to all electrical specification tables

This revision includes the addition of the following devices:

- PIC32MX130F064B
- PIC32MX130F064C
- PIC32MX130F064D
- PIC32MX150F128B
- PIC32MX150F128C
- PIC32MX150F128D
- PIC32MX230F064B
- PIC32MX230F064C
- PIC32MX230F064D
- PIC32MX250F128B
- PIC32MX250F128C
- PIC32MX250F128D

Text and formatting changes were incorporated throughout the document.

All other major changes are referenced by their respective section in Table A-1.

TABLE A-1: MAJOR SECTION UPDATES

Section	Update Description
"32-bit Microcontrollers (up to 128 KB Flash and 32 KB SRAM) with Audio and Graphics Interfaces, USB, and Advanced Analog**"**	Split the existing Features table into two: PIC32MX1XX General Purpose Family Features (Table 1) and PIC32MX2XX USB Family Features (Table 2). Added the SPDIP package reference (see Table 1, Table 2, and **"Pin Diagrams"**). Added the new devices to the applicable pin diagrams. Changed PGED2 to PGED1 on pin 35 of the 36-pin VTLA diagram for PIC32MX220F032C, PIC32MX220F016C, PIC32MX230F064C, and PIC32MX250F128C devices.
1.0 "Device Overview"	Added the SPDIP package reference and updated the pin number for AN12 for 44-pin QFN devices in the Pinout I/O Descriptions (see Table 1-1). Added the PGEC4/PGED4 pin pair and updated the C1INA-C1IND and C2INA-C2IND pin numbers for 28-pin SSOP/SPDIP/SOIC devices in the Pinout I/O Descriptions (see Table 1-1).
2.0 "Guidelines for Getting Started with 32-bit Microcontrollers"	Updated the Recommended Minimum Connection diagram (see Figure 2-1).

Revision F (February 2014)

This revision includes the addition of the following devices:

- PIC32MX170F256B
- PIC32MX170F256D
- PIC32MX270F256B
- PIC32MX270F256D

In addition, this revision includes the following major changes as described in Table A-5, as well as minor updates to text and formatting, which were incorporated throughout the document.

TABLE A-5: MAJOR SECTION UPDATES

Section	Update Description
32-bit Microcontrollers (up to 256 KB Flash and 64 KB SRAM) with Audio and Graphics Interfaces, USB, and Advanced Analog	Added new devices to the family features (see Table 1 and Table 2). Updated pin diagrams to include new devices (see **"Pin Diagrams"**).
1.0 "Device Overview"	Added Note 3 reference to the following pin names: VBUS, VUSB3V3, VBUSON, D+, D-, and USBID.
2.0 "Guidelines for Getting Started with 32-bit MCUs"	Replaced Figure 2-1: Recommended Minimum Connection. Updated Figure 2-2: $\overline{\text{MCLR}}$ Pin Connections. Added **2.9 "Sosc Design Recommendation"**.
4.0 "Memory Organization"	Added memory tables for devices with 64 KB RAM (see Table 4-4 through Table 4-5). Changed the Virtual Addresses for all registers and updated the PWP bits in the DEVCFG: Device Configuration Word Summary (see Table 4-17). Updated the ODCA, ODCB, and ODCC port registers (see Table 4-19, Table 4-20, and Table 4-21). The RTCTIME, RTCDATE, ALRMTIME, and ALRMDATE registers were updated (see Table 4-25). Added Data Ram Size value for 64 KB RAM devices (see Register 4-5). Added Program Flash Size value for 256 KB Flash devices (see Register 4-5).
12.0 "Timer1"	The Timer1 block diagram was updated to include the 16-bit data bus (see Figure 12-1).
13.0 "Timer2/3, Timer4/5"	The Timer2-Timer5 block diagram (16-bit) was updated to include the 16-bit data bus (see Figure 13-1). The Timer2/3, Timer4/5 block diagram (32-bit) was updated to include the 32-bit data bus (see Figure 13-1).
19.0 "Parallel Master Port (PMP)"	The CSF<1:0> bit value definitions for '00' and '01' were updated (see Register 19-1). Bit 14 in the Parallel Port Address register (PMADDR) was updated (see Register 19-3).
20.0 "Real-Time Clock and Calendar (RTCC)"	The following registers were updated: RTCTIME (see Register 20-3) RTCDATE (see Register 20-4) ALRMTIME (see Register 20-5) ALRMDATE (see Register 20-6)
26.0 "Special Features"	Updated the PWP bits (see Register 26-1).
29.0 "Electrical Characteristics"	Added parameters DO50 and DO50a to the Capacitive Loading Requirements on Output Pins (see Table 29-14). Added Note 5 to the IDD DC Characteristics (see Table 29-5). Added Note 4 to the IIDLE DC Characteristics (see Table 29-6). Added Note 5 to the IPD DC Characteristics (see Table 29-7). Updated the conditions for parameters USB321 (VOL) and USB322 (VOH) in the OTG Electrical Specifications (see Table 29-38).
Product Identification System	Added 40 MHz speed information.

© 2011-2016 Microchip Technology Inc.