Welcome to E-XFL.COM

Understanding Embedded - CPLDs (Complex Programmable Logic Devices)

Embedded - CPLDs, or Complex Programmable Logic Devices, are highly versatile digital logic devices used in electronic systems. These programmable components are designed to perform complex logical operations and can be customized for specific applications. Unlike fixed-function ICs, CPLDs offer the flexibility to reprogram their configuration, making them an ideal choice for various embedded systems. They consist of a set of logic gates and programmable interconnects, allowing designers to implement complex logic circuits without needing custom hardware.

Applications of Embedded - CPLDs

Details	
Product Status	Obsolete
Programmable Type	EE PLD
Delay Time tpd(1) Max	20 ns
Voltage Supply - Internal	4.5V ~ 5.5V
Number of Logic Elements/Blocks	-
Number of Macrocells	12
Number of Gates	-
Number of I/O	-
Operating Temperature	-40°C ~ 85°C (TA)
Mounting Type	Surface Mount
Package / Case	28-LCC (J-Lead)
Supplier Device Package	28-PLCC (11.51x11.51)
Purchase URL	https://www.e-xfl.com/product-detail/lattice-semiconductor/gal26v12c-20lji

16-Ball WLCS Package Option 2: iCE40 UltraLite™

Dimensions in Millimeters

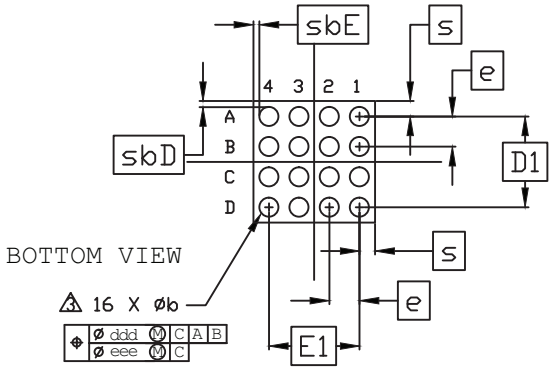

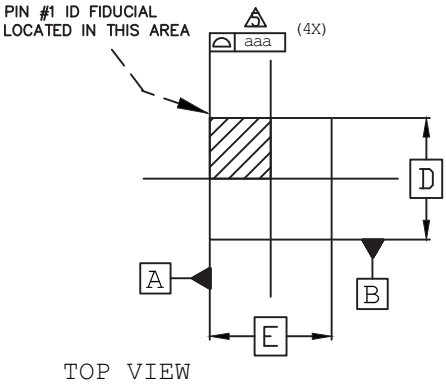

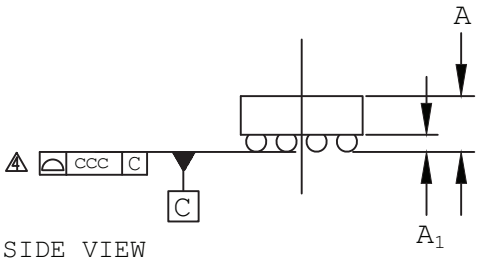

NOTES:

1. ALL DIMENSIONS AND TOLERANCE PER ASME Y 14.5M - 1994.

2. ALL DIMENSIONS ARE IN MILLIMETERS.

3. DIMENSION "b" IS MEASURES AT THE MAXIMUM BUMP DIAMETER PARALLEL TO PRIMARY DATUM C.

4. PRIMARY DATUM C AND SEATING PLANE ARE DEFINED BY THE SPHERICAL CROWNS OF THE SOLDER BUMPS.

5. BILATERAL TOLERANCE ZONE IS APPLIED TO EACH SIDE OF THE PACKAGE BODY.

REF.	Min.	Nom.	Max.
A	0.413	0.452	0.491
A1	0.122	0.152	0.182
b	0.188	0.218	0.248
D	1.409 BSC		
E	1.409 BSC		
D1	1.05 BSC		
E1	1.05 BSC		
e	0.35 BSC		
s	–	0.180	–
sbD	0.067	0.071	0.072
sbE	0.067	0.071	0.072
aaa	0.03		
ccc	0.03		
ddd	0.050		
eee	0.015		

28-Pin SSOP Package

Dimensions in Millimeters

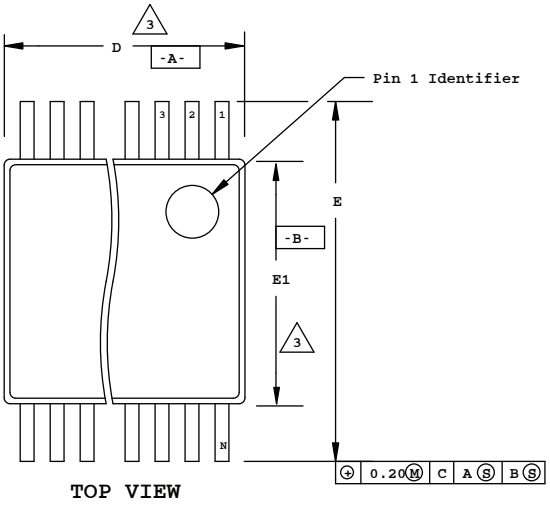

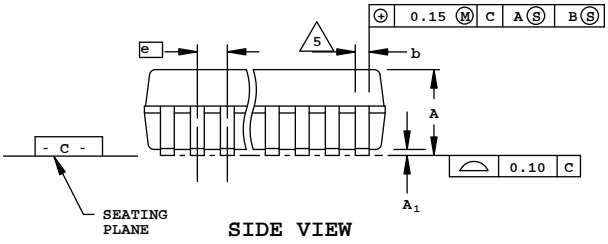

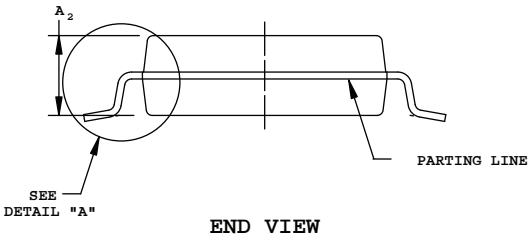

SYMBOL	COMMON DIMENSIONS		
	MIN.	NOM.	MAX.
A	--	--	2.0
A_1	0.05	--	--
A_2	1.65	1.75	1.85
b	0.22	-	0.38
b_1	0.22	0.30	0.33
c	0.09	--	0.25
c_1	0.09	0.15	0.21
D	9.90	10.20	10.50
E1	5.00	5.30	5.60
e	0.65 BSC		
E	7.40	7.80	8.20
L	0.55	0.75	0.95
L1	1.25 REF.		
N	28		
oc	0	4	8
R1	0.09	--	--

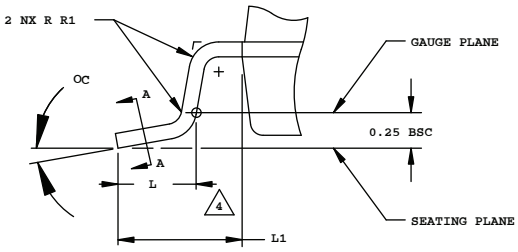

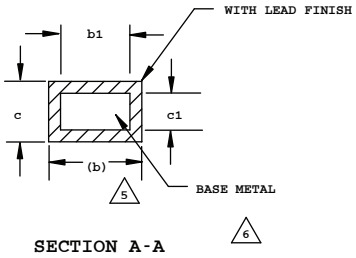

NOTES:

1. CONTROLLING DIMENSION: MILLIMETERS.
2. DIMENSIONING & TOLERANCES PER ANSI.Y14.5M-1982.
3. "D" & "E1" DO NOT INCLUDE MOLD FLASH OR PROTRUSIONS, BUT DO INCLUDE MOLD MISMATCH AND ARE MEASURED AT THE PARTING LINE. MOLD FLASH OR PROTRUSIONS SHALL NOT EXCEED 0.20mm PER SIDE.
4. TO BE DETERMINED AT THE SEATING PLANE
5. DIMENSION b DOES NOT INCLUDE DAMBAR PROTRUSION/INTRUSION. ALLOWABLE DAMBAR PROTRUSION SHALL BE 0.13mm TOTAL IN EXCESS OF b DIMENSION AT MAXIMUM MATERIAL CONDITION. DAMBAR INTRUSION SHALL NOT REDUCE DIMENSION b BY MORE THAN 0.07mm AT LEAST MATERIAL CONDITION.
6. THESE DIMENSIONS APPLY TO THE FLAT SECTION OF THE LEAD BETWEEN 0.10 & 0.25mm FROM THE LEAD TIP
7. "N" IS THE NUMBER OF TERMINAL POSITIONS

32-Pin QFN Package Option 3: MachXO2 SG32C

Dimensions in Millimeters

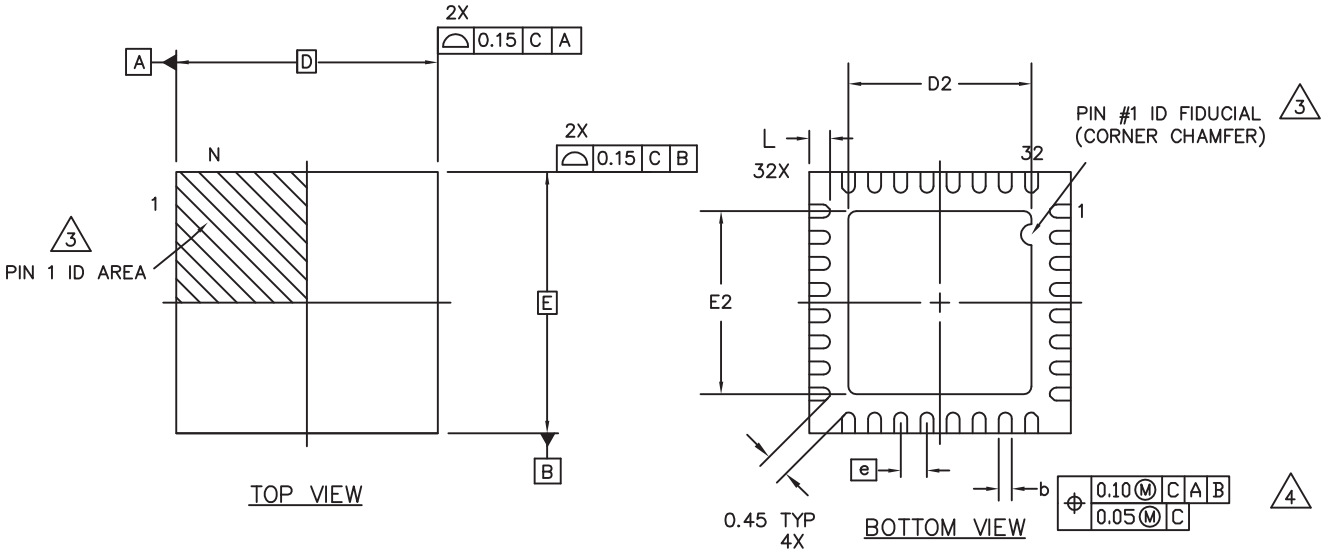

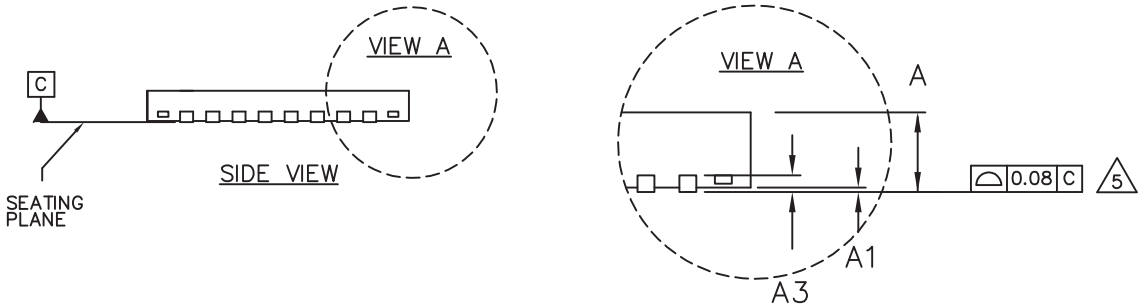

NOTES: UNLESS OTHERWISE SPECIFIED

1. DIMENSIONS AND TOLERANCES PER ANSI Y14.5M.

2. ALL DIMENSIONS ARE IN MILLIMETERS.

3. EXACT SHAPE AND SIZE OF THIS FEATURE IS OPTIONAL.

4. DIMENSION b APPLIES TO PLATED TERMINAL AND IS MEASURED BETWEEN 0.15 AND 0.30 mm FROM TERMINAL TIP.

5. APPLIES TO EXPOSED PORTION OF TERMINALS.

6. JEDEC REFERENCE MO-248 AND DR-4.2

SYMBOL	MIN.	NOM.	MAX.
A	0.50	0.55	0.65
A1	0.00	0.02	0.05
A3		0.2 REF	
D		5.0 BSC	
D2	3.40	3.50	3.60
E		5.0 BSC	
E2	3.40	3.50	3.60
b	0.18	0.25	0.30
e		0.50 BSC	
L	0.35	0.40	0.45

36-Ball ucfBGA Package: iCE40 Ultra™

Dimensions in Millimeters

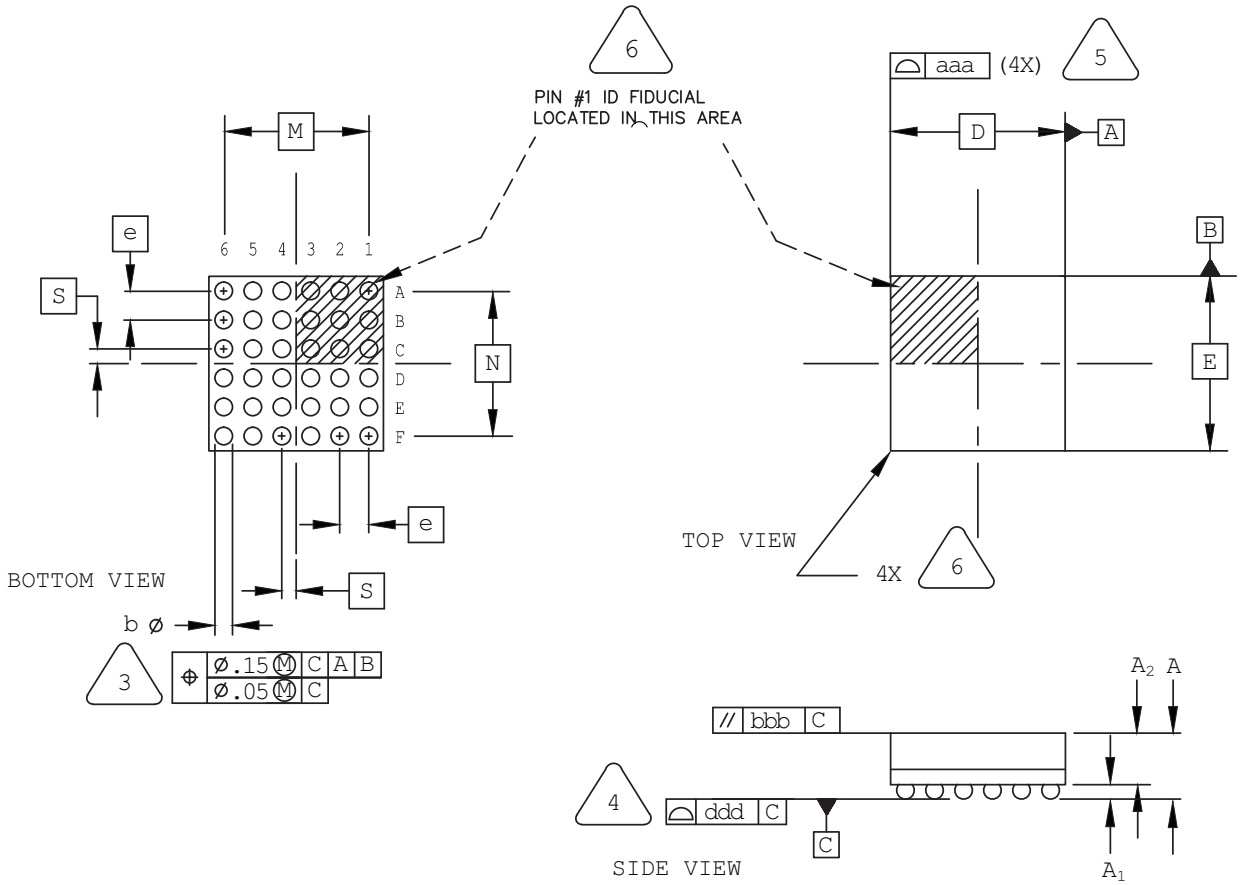

NOTES: UNLESS OTHERWISE SPECIFIED

1. DIMENSIONS AND TOLERANCES PER ANSI Y14.5M.

2. ALL DIMENSIONS ARE IN MILLIMETERS.

3. DIMENSION "b" IS MEASURED AT THE MAXIMUM SOLDER BALL DIAMETER, PARALLEL TO PRIMARY DATUM C

4. PRIMARY DATUM C AND SEATING PLANE ARE DEFINED BY THE SPHERICAL CROWNS OF THE SOLDER BALLS.

5. BILATERAL TOLERANCE ZONE IS APPLIED TO EACH SIDE OF THE PACKAGE BODY.

6. EXACT SHAPE AND SIZE OF THIS FEATURE IS OPTIONAL.

SYMBOL	MIN.	NOM.	MAX.
A	–	0.81	0.91
A1	0.12	–	–
A2	–	–	0.70
D/E	2.50 BSC		
M/N	2.00 BSC		
S	0.20 BSC		
b	0.20	0.25	0.30
e	0.40 BSC		
aaa	–	–	0.10
bbb	–	–	0.10
ddd	–	–	0.10

Revision History

Date	Version	Change Summary
March 2017	5.4	Added ispMACH 4000 to 100-Pin TQFP Package Option 1: MachXO2, MachXO™, isp-MACH® 4000.
		Added 121-Ball caBGA Package (9x9 mm Body).
December 2016	5.3	Updated “32-Pin QFNS Package” headings to “32-Pin QFN Package”.
		Added 32-Pin QFN Package Option 3: MachXO2 SG32C.
		Added 30-Ball WLSC Package.
		Added iCE40 UltraPlus and MachXO2 to 48-Pin QFN Package Option 2: L-ASC10, iCE40 Ultra, iCE40 UltraPlus, MachXO2.
		Added 484-Ball caBGA Package.
June 2016	5.2	Updated 285-ball csfBGA package outline drawing.
		Added 36-Ball WLCS Package Option 3: LIFMD™.
		Fixed typo in 48-Pin QFN Package Option 2: L-ASC10, iCE40 Ultra, iCE40 UltraPlus, MachXO2.
		Added 64-Ball ucfBGA Package.
		Added 80-Ball ctfBGA Package.
		Added 81-Ball csfBGA Package.
February 2015	5.1	Added 36-Ball ucfBGA Package: iCE40 Ultra.
		Updated 36-Ball ucBGA Package heading to 36-Ball ucBGA Package Option 1.
		Updated 48-Pin QFN Package Option 2: L-ASC10 heading to 48-Pin QFN Package Option 2: L-ASC10, iCE40 Ultra.
January 2015	5.0	Added 16-Ball WLCS Package Option 2: iCE40 UltraLite.
		Updated 16-Ball WLCS Package heading to 16-Ball WLCS Package Option 1: iCE40 LP.
October 2014	4.9	Updated 48-Pin QFN Package heading and moved the section after 48-Pin QFN Package Option 1 (previously Option 2).
	4.8	Removed 20-Ball WLCS Package.
	4.7	Updated 121-Ball csfBGA Package. Revised M/N dimension.
September 2014	4.6	Updated 84-Pin QFN Package. Revised pin numbers from A36 and B27 to A37 and B28.
August 2014	4.5	Updated 16-Ball WLCS Package. Changed second E to e in REF. column.
		Updated 36-Ball WLCS Package Option 1: iCE40 Ultra heading.
		Added 36-Ball WLCS Package Option 2: MachXO3.
		Added 81-Ball WLCS Package.
		Added 121-Ball csfBGA Package.
		Added 256-Ball csfBGA Package.
		Added 324-Ball caBGA Package.
		Added 324-Ball csfBGA Package.
		Added 400-Ball caBGA Package.
		Updated 84-Pin QFN Package. Revised dimension “b” maximum value.
		Updated 256-Ball ftBGA Package Option 1: ispMACH 4000, MachXO, LatticeXP2. Revised dimension “A” values.