Intel - EP1K30FC256-2N Datasheet

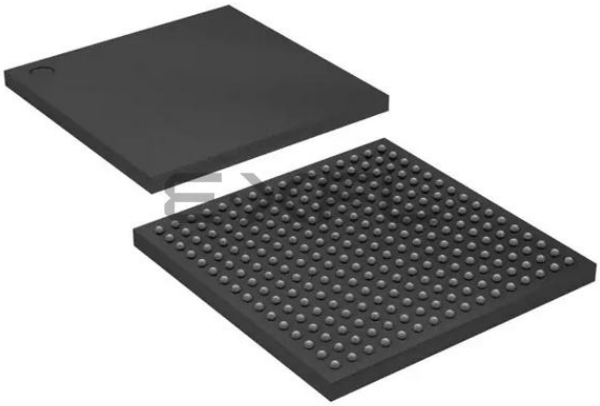

Welcome to E-XFL.COM

Understanding Embedded - FPGAs (Field Programmable Gate Array)

Embedded - FPGAs, or Field Programmable Gate Arrays, are advanced integrated circuits that offer unparalleled flexibility and performance for digital systems. Unlike traditional fixed-function logic devices, FPGAs can be programmed and reprogrammed to execute a wide array of logical operations, enabling customized functionality tailored to specific applications. This reprogrammability allows developers to iterate designs quickly and implement complex functions without the need for custom hardware.

Applications of Embedded - FPGAs

The versatility of Embedded - FPGAs makes them indispensable in numerous fields. In telecommunications.

Details	
Product Status	Obsolete
Number of LABs/CLBs	216
Number of Logic Elements/Cells	1728
Total RAM Bits	24576
Number of I/O	171
Number of Gates	119000
Voltage - Supply	2.375V ~ 2.625V
Mounting Type	Surface Mount
Operating Temperature	0°C ~ 70°C (TA)
Package / Case	256-BGA
Supplier Device Package	256-FBGA (17x17)
Purchase URL	https://www.e-xfl.com/product-detail/intel/ep1k30fc256-2n

The logic array consists of logic array blocks (LABs). Each LAB contains eight LEs and a local interconnect. An LE consists of a 4-input LUT, a programmable flipflop, and dedicated signal paths for carry and cascade functions. The eight LEs can be used to create medium-sized blocks of logic—such as 8-bit counters, address decoders, or state machines—or combined across LABs to create larger logic blocks. Each LAB represents about 96 usable logic gates.

Signal interconnections within ACEX 1K devices (as well as to and from device pins) are provided by the FastTrack Interconnect routing structure, which is a series of fast, continuous row and column channels that run the entire length and width of the device.

Each I / O pin is fed by an I / O element (IOE) located at the end of each row and column of the FastTrack Interconnect routing structure. Each IOE contains a bidirectional I / O buffer and a flipflop that can be used as either an output or input register to feed input, output, or bidirectional signals. When used with a dedicated clock pin, these registers provide exceptional performance. As inputs, they provide setup times as low as 1.1 ns and hold times of 0 ns. As outputs, these registers provide clock-to-output times as low as 2.5 ns. IOEs provide a variety of features, such as JTAG BST support, slew-rate control, tri-state buffers, and open-drain outputs.

Figure 1 shows a block diagram of the ACEX 1K device architecture. Each group of LEs is combined into an LAB; groups of LABs are arranged into rows and columns. Each row also contains a single EAB. The LABs and EABs are interconnected by the FastTrack Interconnect routing structure. IOEs are located at the end of each row and column of the FastTrack Interconnect routing structure.

Figure 3. ACEX 1K EAB in Dual-Port RAM Mode

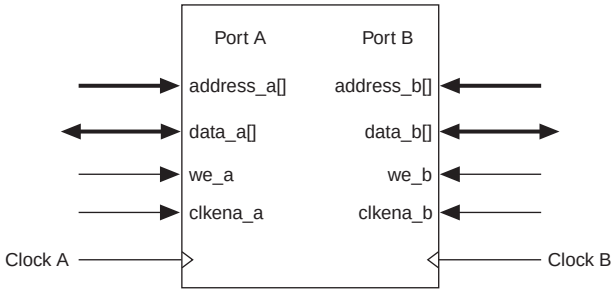

Figure 4. ACEX 1K Device in Single-Port RAM Mode

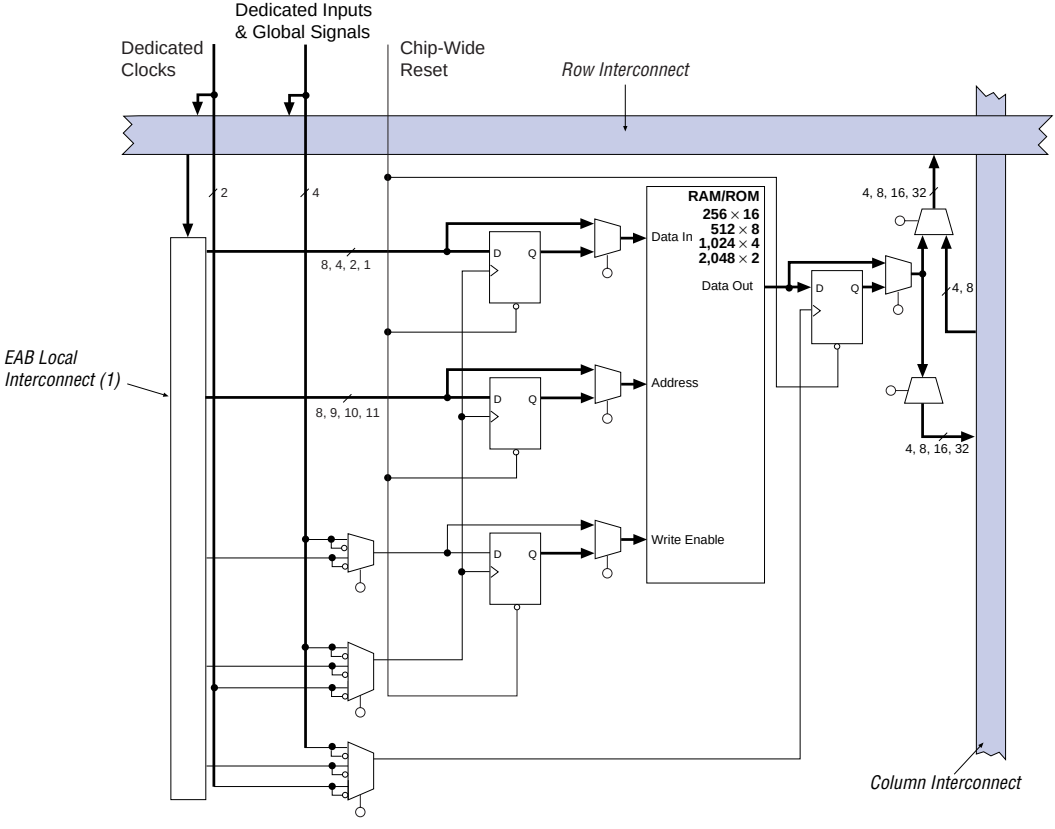

Note:

(1) EP1K10, EP1K30, and EP1K50 devices have 88 EAB local interconnect channels; EP1K100 devices have 104 EAB local interconnect channels.

EABs can be used to implement synchronous RAM, which is easier to use than asynchronous RAM. A circuit using asynchronous RAM must generate the RAM write enable signal, while ensuring that its data and address signals meet setup and hold time specifications relative to the write enable signal. In contrast, the EAB's synchronous RAM generates its own write enable signal and is self-timed with respect to the input or write clock. A circuit using the EAB's self-timed RAM must only meet the setup and hold time specifications of the global clock.

When used as RAM, each EAB can be configured in any of the following sizes: 256 × 16; 512 × 8; 1,024 × 4; or 2,048 × 2. Figure 5 shows the ACEX 1K EAB memory configurations.

Figure 5. ACEX 1K EAB Memory Configurations

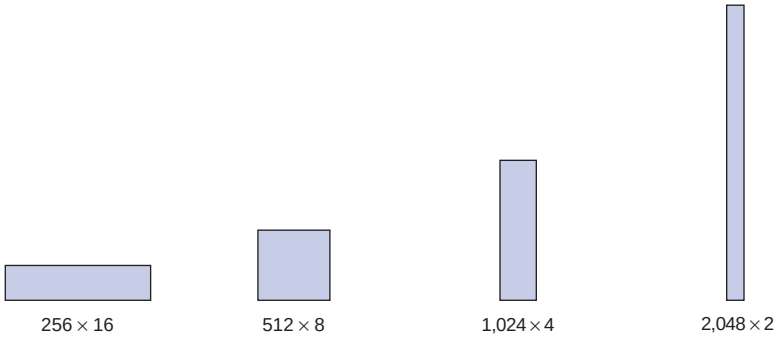

Larger blocks of RAM are created by combining multiple EABs. For example, two 256 × 16 RAM blocks can be combined to form a 256 × 32 block, and two 512 × 8 RAM blocks can be combined to form a 512 × 16 block. Figure 6 shows examples of multiple EAB combination.

Figure 6. Examples of Combining ACEX 1K EABs

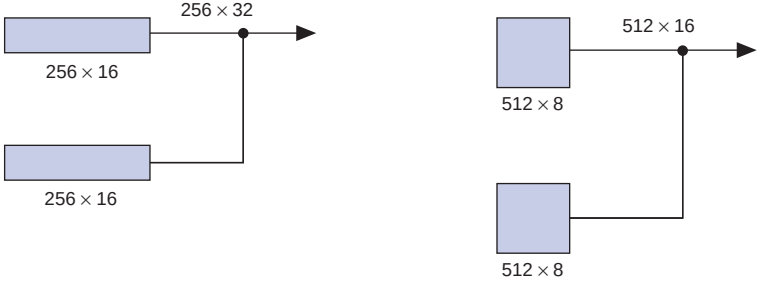

Carry Chain

The carry chain provides a very fast (as low as 0.2 ns) carry-forward function between LEs. The carry-in signal from a lower-order bit drives forward into the higher-order bit via the carry chain, and feeds into both the LUT and the next portion of the carry chain. This feature allows the ACEX 1K architecture to efficiently implement high-speed counters, adders, and comparators of arbitrary width. Carry chain logic can be created automatically by the compiler during design processing, or manually by the designer during design entry. Parameterized functions, such as LPM and DesignWare functions, automatically take advantage of carry chains.

Carry chains longer than eight LEs are automatically implemented by linking LABs together. For enhanced fitting, a long carry chain skips alternate LABs in a row. A carry chain longer than one LAB skips either from even-numbered LAB to even-numbered LAB, or from odd-numbered LAB to odd-numbered LAB. For example, the last LE of the first LAB in a row carries to the first LE of the third LAB in the row. The carry chain does not cross the EAB at the middle of the row. For instance, in the EP1K50 device, the carry chain stops at the eighteenth LAB, and a new carry chain begins at the nineteenth LAB.

Figure 9 shows how an *n*-bit full adder can be implemented in *n* + 1 LEs with the carry chain. One portion of the LUT generates the sum of two bits using the input signals and the carry-in signal; the sum is routed to the output of the LE. The register can be bypassed for simple adders or used for an accumulator function. Another portion of the LUT and the carry chain logic generates the carry-out signal, which is routed directly to the carry-in signal of the next-higher-order bit. The final carry-out signal is routed to an LE, where it can be used as a general-purpose signal.

Cascade Chain

With the cascade chain, the ACEX 1K architecture can implement functions that have a very wide fan-in. Adjacent LUTs can be used to compute portions of the function in parallel; the cascade chain serially connects the intermediate values. The cascade chain can use a logical AND or logical OR (via De Morgan's inversion) to connect the outputs of adjacent LEs. With a delay as low as 0.6 ns per LE, each additional LE provides four more inputs to the effective width of a function. Cascade chain logic can be created automatically by the compiler during design processing, or manually by the designer during design entry.

Cascade chains longer than eight bits are implemented automatically by linking several LABs together. For easier routing, a long cascade chain skips every other LAB in a row. A cascade chain longer than one LAB skips either from even-numbered LAB to even-numbered LAB, or from odd-numbered LAB to odd-numbered LAB (e.g., the last LE of the first LAB in a row cascades to the first LE of the third LAB). The cascade chain does not cross the center of the row (e.g., in the EP1K50 device, the cascade chain stops at the eighteenth LAB, and a new one begins at the nineteenth LAB). This break is due to the EAB's placement in the middle of the row.

Figure 10 shows how the cascade function can connect adjacent LEs to form functions with a wide fan-in. These examples show functions of 4*n* variables implemented with *n* LEs. The LE delay is 1.3 ns; the cascade chain delay is 0.6 ns. With the cascade chain, decoding a 16-bit address requires 3.1 ns.

Figure 10. ACEX 1K Cascade Chain Operation

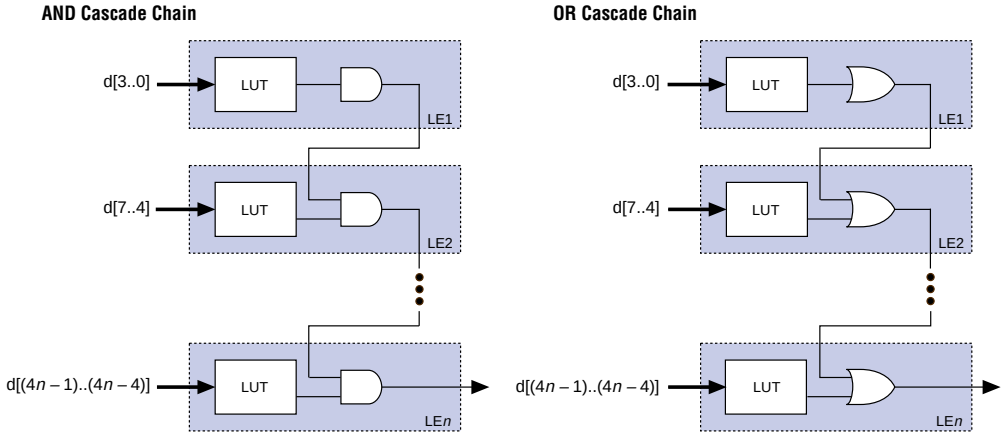

FastTrack Interconnect Routing Structure

In the ACEX 1K architecture, connections between LEs, EABs, and device I/O pins are provided by the FastTrack Interconnect routing structure, which is a series of continuous horizontal and vertical routing channels that traverse the device. This global routing structure provides predictable performance, even in complex designs. In contrast, the segmented routing in FPGAs requires switch matrices to connect a variable number of routing paths, increasing the delays between logic resources and reducing performance.

The FastTrack Interconnect routing structure consists of row and column interconnect channels that span the entire device. Each row of LABs is served by a dedicated row interconnect. The row interconnect can drive I/O pins and feed other LABs in the row. The column interconnect routes signals between rows and can drive I/O pins.

Row channels drive into the LAB or EAB local interconnect. The row signal is buffered at every LAB or EAB to reduce the effect of fan-out on delay. A row channel can be driven by an LE or by one of three column channels. These four signals feed dual 4-to-1 multiplexers that connect to two specific row channels. These multiplexers, which are connected to each LE, allow column channels to drive row channels even when all eight LEs in a LAB drive the row interconnect.

Each column of LABs or EABs is served by a dedicated column interconnect. The column interconnect that serves the EABs has twice as many channels as other column interconnects. The column interconnect can then drive I/O pins or another row's interconnect to route the signals to other LABs or EABs in the device. A signal from the column interconnect, which can be either the output of a LE or an input from an I/O pin, must be routed to the row interconnect before it can enter a LAB or EAB. Each row channel that is driven by an IOE or EAB can drive one specific column channel.

Access to row and column channels can be switched between LEs in adjacent pairs of LABs. For example, a LE in one LAB can drive the row and column channels normally driven by a particular LE in the adjacent LAB in the same row, and vice versa. This flexibility enables routing resources to be used more efficiently. Figure 13 shows the ACEX 1K LAB.

Figure 15. ACEX 1K Bidirectional I/O Registers

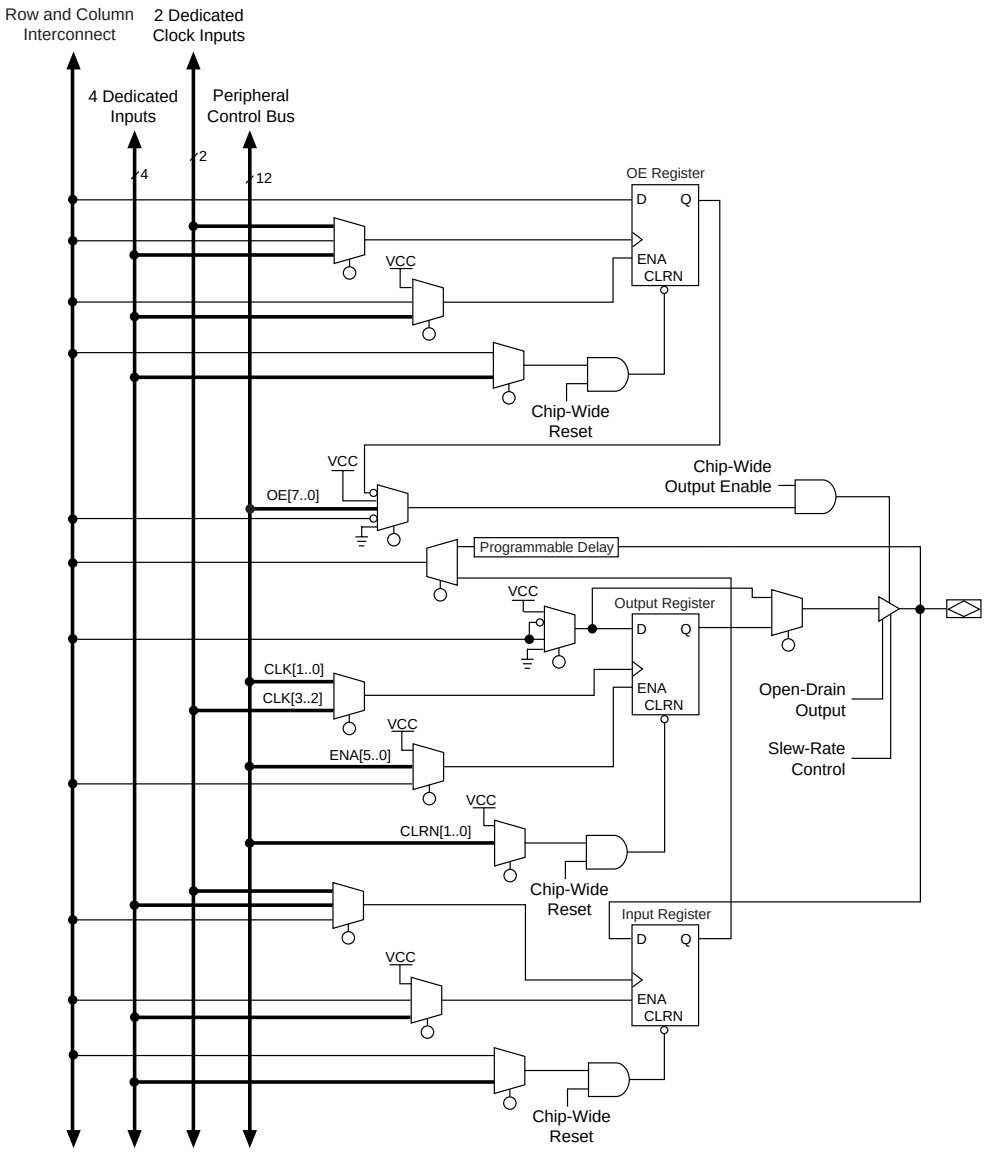

For designs that require both a multiplied and non-multiplied clock, the clock trace on the board can be connected to the `GCLK1` pin. In the Altera software, the `GCLK1` pin can feed both the ClockLock and ClockBoost circuitry in the ACEX 1K device. However, when both circuits are used, the other clock pin cannot be used.

ClockLock & ClockBoost Timing Parameters

For the ClockLock and ClockBoost circuitry to function properly, the incoming clock must meet certain requirements. If these specifications are not met, the circuitry may not lock onto the incoming clock, which generates an erroneous clock within the device. The clock generated by the ClockLock and ClockBoost circuitry must also meet certain specifications. If the incoming clock meets these requirements during configuration, the ClockLock and ClockBoost circuitry will lock onto the clock during configuration. The circuit will be ready for use immediately after configuration. Figure 19 shows the incoming and generated clock specifications.

Figure 19. Specifications for the Incoming & Generated Clocks *Note (1)*

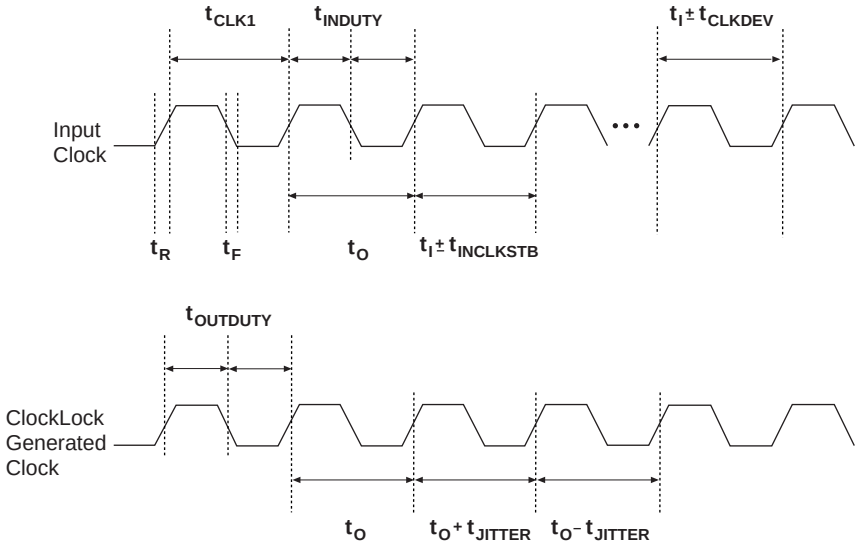

Note:

(1) The t_I parameter refers to the nominal input clock period; the t_O parameter refers to the nominal output clock period.

Table 12. ClockLock & ClockBoost Parameters for -2 Speed-Grade Devices

Symbol	Parameter	Condition	Min	Typ	Max	Unit
t_R	Input rise time				5	ns
t_F	Input fall time				5	ns
t_{INDUTY}	Input duty cycle		40		60	%
f_{CLK1}	Input clock frequency (ClockBoost clock multiplication factor equals 1)		25		80	MHz
f_{CLK2}	Input clock frequency (ClockBoost clock multiplication factor equals 2)		16		40	MHz
f_{CLKDEV}	Input deviation from user specification in the software *(1)*				25,000	PPM
$t_{INCLKSTB}$	Input clock stability (measured between adjacent clocks)				100	ps
t_{LOCK}	Time required for ClockLock or ClockBoost to acquire lock *(3)*				10	µs
t_{JITTER}	Jitter on ClockLock or ClockBoost-generated clock *(4)*	$t_{INCLKSTB}$ < 100			250 *(4)*	ps
		$t_{INCLKSTB}$ < 50			200 *(4)*	ps
$t_{OUTDUTY}$	Duty cycle for ClockLock or ClockBoost-generated clock		40	50	60	%

Notes to tables:

(1) To implement the ClockLock and ClockBoost circuitry with the Altera software, designers must specify the input frequency. The Altera software tunes the PLL in the ClockLock and ClockBoost circuitry to this frequency. The f_{CLKDEV} parameter specifies how much the incoming clock can differ from the specified frequency during device operation. Simulation does not reflect this parameter.

(2) Twenty-five thousand parts per million (PPM) equates to 2.5% of input clock period.

(3) During device configuration, the ClockLock and ClockBoost circuitry is configured before the rest of the device. If the incoming clock is supplied during configuration, the ClockLock and ClockBoost circuitry locks during configuration because the t_{LOCK} value is less than the time required for configuration.

(4) The t_{JITTER} specification is measured under long-term observation. The maximum value for t_{JITTER} is 200 ps if $t_{INCLKSTB}$ is lower than 50 ps.

I/O Configuration

This section discusses the PCI pull-up clamping diode option, slew-rate control, open-drain output option, and MultiVolt I/O interface for ACEX 1K devices. The PCI pull-up clamping diode, slew-rate control, and open-drain output options are controlled pin-by-pin via Altera software logic options. The MultiVolt I/O interface is controlled by connecting V_{CCIO} to a different voltage than V_{CCINT}. Its effect can be simulated in the Altera software via the **Global Project Device Options** dialog box (Assign menu).

Table 16. 32-Bit IDCODE for ACEX 1K Devices *Note (1)*

Device	IDCODE (32 Bits)			
	Version (4 Bits)	Part Number (16 Bits)	Manufacturer's Identity (11 Bits)	1 (1 Bit) *(2)*
EP1K10	0001	0001 0000 0001 0000	00001101110	1
EP1K30	0001	0001 0000 0011 0000	00001101110	1
EP1K50	0001	0001 0000 0101 0000	00001101110	1
EP1K100	0010	0000 0001 0000 0000	00001101110	1

Notes to tables:

(1) The most significant bit (MSB) is on the left.

(2) The least significant bit (LSB) for all JTAG IDCODEs is 1.

ACEX 1K devices include weak pull-up resistors on the JTAG pins.

For more information, see the following documents:

- *Application Note 39 (IEEE Std. 1149.1 (JTAG) Boundary-Scan Testing in Altera Devices)*
- *ByteBlasterMV Parallel Port Download Cable Data Sheet*
- *BitBlaster Serial Download Cable Data Sheet*
- *Jam Programming & Test Language Specification*

Figure 20 shows the timing requirements for the JTAG signals.

Figure 20. ACEX 1K JTAG Waveforms

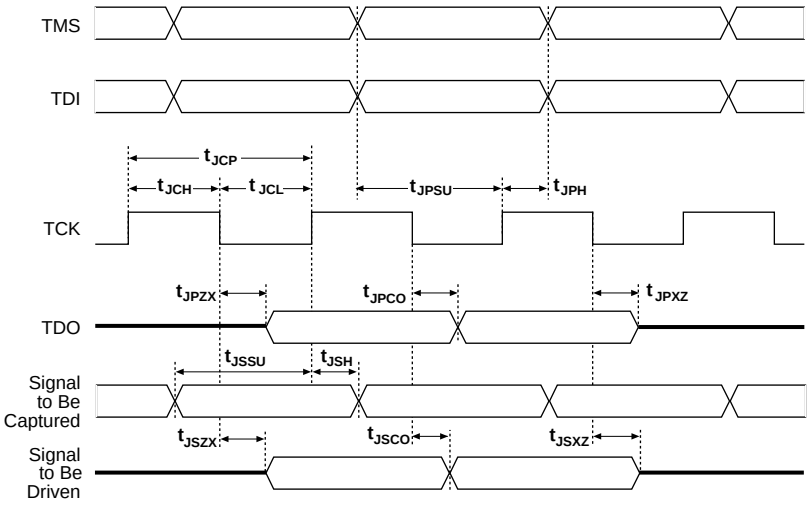

Table 17 shows the timing parameters and values for ACEX 1K devices.

Table 17. ACEX 1K JTAG Timing Parameters & Values

Symbol	Parameter	Min	Max	Unit
t_{JCP}	TCK clock period	100		ns
t_{JCH}	TCK clock high time	50		ns
t_{JCL}	TCK clock low time	50		ns
t_{JPSU}	JTAG port setup time	20		ns
t_{JPH}	JTAG port hold time	45		ns
t_{JPCO}	JTAG port clock to output		25	ns
t_{JPZX}	JTAG port high impedance to valid output		25	ns
t_{JPXZ}	JTAG port valid output to high impedance		25	ns
t_{JSSU}	Capture register setup time	20		ns
t_{JSH}	Capture register hold time	45		ns
t_{JSCO}	Update register clock to output		35	ns
t_{JSZX}	Update register high impedance to valid output		35	ns
t_{JSXZ}	Update register valid output to high impedance		35	ns

Table 19. ACEX 1K Device Recommended Operating Conditions

Symbol	Parameter	Conditions	Min	Max	Unit
V_{CCINT}	Supply voltage for internal logic and input buffers	*(3)*, *(4)*	2.375 (2.375)	2.625 (2.625)	V
V_{CCIO}	Supply voltage for output buffers, 3.3-V operation	*(3)*, *(4)*	3.00 (3.00)	3.60 (3.60)	V
	Supply voltage for output buffers, 2.5-V operation	*(3)*, *(4)*	2.375 (2.375)	2.625 (2.625)	V
V_I	Input voltage	*(2)*, *(5)*	–0.5	5.75	V
V_O	Output voltage		0	V_{CCIO}	V
T_A	Ambient temperature	Commercial range	0	70	° C
		Industrial range	–40	85	° C
T_J	Junction temperature	Commercial range	0	85	° C
		Industrial range	–40	100	° C
		Extended range	–40	125	° C
t_R	Input rise time			40	ns
t_F	Input fall time			40	ns

Table 20. ACEX 1K Device DC Operating Conditions (Part 1 of 2) *Notes (6), (7)*

Symbol	Parameter	Conditions	Min	Typ	Max	Unit
V_{IH}	High-level input voltage		1.7, 0.5 × V_{CCIO} *(8)*		5.75	V
V_{IL}	Low-level input voltage		–0.5		0.8, 0.3 × V_{CCIO} *(8)*	V
V_{OH}	3.3-V high-level TTL output voltage	I_{OH} = –8 mA DC, V_{CCIO} = 3.00 V *(9)*	2.4			V
	3.3-V high-level CMOS output voltage	I_{OH} = –0.1 mA DC, V_{CCIO} = 3.00 V *(9)*	V_{CCIO} – 0.2			V
	3.3-V high-level PCI output voltage	I_{OH} = –0.5 mA DC, V_{CCIO} = 3.00 to 3.60 V *(9)*	0.9 ×†V_{CCIO}			V
	2.5-V high-level output voltage	I_{OH} = –0.1 mA DC, V_{CCIO} = 2.375 V *(9)*	2.1			V
		I_{OH} = –1 mA DC, V_{CCIO} = 2.375 V *(9)*	2.0			V
		I_{OH} = –2 mA DC, V_{CCIO} = 2.375 V *(9)*	1.7			V

Figure 22 shows the required relationship between V_{CCIO} and V_{CCINT} to satisfy 3.3-V PCI compliance.

Figure 22. Relationship between V_{CCIO} & V_{CCINT} for 3.3-V PCI Compliance

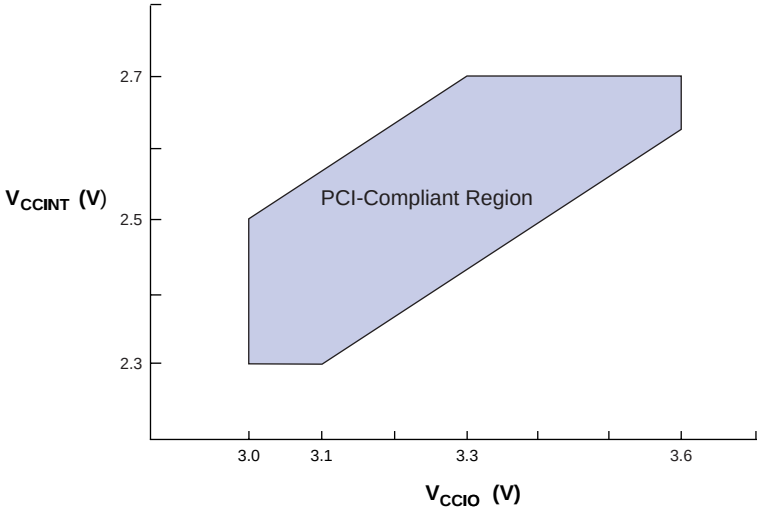

Figure 23 shows the typical output drive characteristics of ACEX 1K devices with 3.3-V and 2.5-V V_{CCIO}. The output driver is compliant to the 3.3-V ***PCI Local Bus Specification***, ***Revision 2.2*** (when `VCCIO` pins are connected to 3.3 V). ACEX 1K devices with a -1 speed grade also comply with the drive strength requirements of the ***PCI Local Bus Specification***, ***Revision 2.2*** (when `VCCINT` pins are powered with a minimum supply of 2.375 V, and `VCCIO` pins are connected to 3.3 V). Therefore, these devices can be used in open 5.0-V PCI systems.

Table 22. LE Timing Microparameters (Part 2 of 2) *Note (1)*

Symbol	Parameter	Conditions
t_{CASC}	Cascade-in to cascade-out delay	
t_{C}	LE register control signal delay	
t_{CO}	LE register clock-to-output delay	
t_{COMB}	Combinatorial delay	
t_{SU}	LE register setup time for data and enable signals before clock; LE register recovery time after asynchronous clear, preset, or load	
t_{H}	LE register hold time for data and enable signals after clock	
t_{PRE}	LE register preset delay	
t_{CLR}	LE register clear delay	
t_{CH}	Minimum clock high time from clock pin	
t_{CL}	Minimum clock low time from clock pin	

Table 23. IOE Timing Microparameters *Note (1)*

Symbol	Parameter	Conditions
t_{IOD}	IOE data delay	
t_{IOC}	IOE register control signal delay	
t_{IOCO}	IOE register clock-to-output delay	
t_{IOCOMB}	IOE combinatorial delay	
t_{IOSU}	IOE register setup time for data and enable signals before clock; IOE register recovery time after asynchronous clear	
t_{IOH}	IOE register hold time for data and enable signals after clock	
t_{IOCLR}	IOE register clear time	
t_{OD1}	Output buffer and pad delay, slow slew rate = off, V_{CCIO} = 3.3 V	C1 = 35 pF *(2)*
t_{OD2}	Output buffer and pad delay, slow slew rate = off, V_{CCIO} = 2.5 V	C1 = 35 pF *(3)*
t_{OD3}	Output buffer and pad delay, slow slew rate = on	C1 = 35 pF *(4)*
t_{XZ}	IOE output buffer disable delay	
t_{ZX1}	IOE output buffer enable delay, slow slew rate = off, V_{CCIO} = 3.3 V	C1 = 35 pF *(2)*
t_{ZX2}	IOE output buffer enable delay, slow slew rate = off, V_{CCIO} = 2.5 V	C1 = 35 pF *(3)*
t_{ZX3}	IOE output buffer enable delay, slow slew rate = on	C1 = 35 pF *(4)*
t_{INREG}	IOE input pad and buffer to IOE register delay	
t_{IOFD}	IOE register feedback delay	
t_{INCOMB}	IOE input pad and buffer to FastTrack Interconnect delay	

Table 24. EAB Timing Microparameters *Note (1)*

Symbol	Parameter	Conditions
$t_{EABDATA1}$	Data or address delay to EAB for combinatorial input	
$t_{EABDATA2}$	Data or address delay to EAB for registered input	
t_{EABWE1}	Write enable delay to EAB for combinatorial input	
t_{EABWE2}	Write enable delay to EAB for registered input	
t_{EABRE1}	Read enable delay to EAB for combinatorial input	
t_{EABRE2}	Read enable delay to EAB for registered input	
t_{EABCLK}	EAB register clock delay	
t_{EABCO}	EAB register clock-to-output delay	
$t_{EABBYPASS}$	Bypass register delay	
t_{EABSU}	EAB register setup time before clock	
t_{EABH}	EAB register hold time after clock	
t_{EABCLR}	EAB register asynchronous clear time to output delay	
t_{AA}	Address access delay (including the read enable to output delay)	
t_{WP}	Write pulse width	
t_{RP}	Read pulse width	
t_{WDSU}	Data setup time before falling edge of write pulse	*(5)*
t_{WDH}	Data hold time after falling edge of write pulse	*(5)*
t_{WASU}	Address setup time before rising edge of write pulse	*(5)*
t_{WAH}	Address hold time after falling edge of write pulse	*(5)*
t_{RASU}	Address setup time before rising edge of read pulse	
t_{RAH}	Address hold time after falling edge of read pulse	
t_{WO}	Write enable to data output valid delay	
t_{DD}	Data-in to data-out valid delay	
t_{EABOUT}	Data-out delay	
t_{EABCH}	Clock high time	
t_{EABCL}	Clock low time	

Table 32. EP1K10 Device EAB Internal Microparameters *Note (1)*

Symbol	Speed Grade						Unit
	-1		-2		-3		
	Min	Max	Min	Max	Min	Max	
$t_{EABDATA1}$		1.8		1.9		1.9	ns
$t_{EABDATA2}$		0.6		0.7		0.7	ns
t_{EABWE1}		1.2		1.2		1.2	ns
t_{EABWE2}		0.4		0.4		0.4	ns
t_{EABRE1}		0.9		0.9		0.9	ns
t_{EABRE2}		0.4		0.4		0.4	ns
t_{EABCLK}		0.0		0.0		0.0	ns
t_{EABCO}		0.3		0.3		0.3	ns
$t_{EABBYPASS}$		0.5		0.6		0.6	ns
t_{EABSU}	1.0		1.0		1.0		ns
t_{EABH}	0.5		0.4		0.4		ns
t_{EABCLR}	0.3		0.3		0.3		ns
t_{AA}		3.4		3.6		3.6	ns
t_{WP}	2.7		2.8		2.8		ns
t_{RP}	1.0		1.0		1.0		ns
t_{WDSU}	1.0		1.0		1.0		ns
t_{WDH}	0.1		0.1		0.1		ns
t_{WASU}	1.8		1.9		1.9		ns
t_{WAH}	1.9		2.0		2.0		ns
t_{RASU}	3.1		3.5		3.5		ns
t_{RAH}	0.2		0.2		0.2		ns
t_{WO}		2.7		2.8		2.8	ns
t_{DD}		2.7		2.8		2.8	ns
t_{EABOUT}		0.5		0.6		0.6	ns
t_{EABCH}	1.5		2.0		2.0		ns
t_{EABCL}	2.7		2.8		2.8		ns

Table 41. EP1K30 Device Interconnect Timing Microparameters *Note (1)*

Symbol	Speed Grade						Unit
	-1		-2		-3		
	Min	Max	Min	Max	Min	Max	
$t_{DIN2IOE}$		1.8		2.4		2.9	ns
t_{DIN2LE}		1.5		1.8		2.4	ns
$t_{DIN2DATA}$		1.5		1.8		2.2	ns
$t_{DCLK2IOE}$		2.2		2.6		3.0	ns
$t_{DCLK2LE}$		1.5		1.8		2.4	ns
$t_{SAMELAB}$		0.1		0.2		0.3	ns
$t_{SAMEROW}$		2.0		2.4		2.7	ns
$t_{SAMECOLUMN}$		0.7		1.0		0.8	ns
$t_{DIFFROW}$		2.7		3.4		3.5	ns
$t_{TWOROWS}$		4.7		5.8		6.2	ns
$t_{LEPERIPH}$		2.7		3.4		3.8	ns
$t_{LABCARRY}$		0.3		0.4		0.5	ns
$t_{LABCASC}$		0.8		0.8		1.1	ns

Table 42. EP1K30 External Timing Parameters *Notes (1), (2)*

Symbol	Speed Grade						Unit
	-1		-2		-3		
	Min	Max	Min	Max	Min	Max	
t_{DRR}		8.0		9.5		12.5	ns
t_{INSU} *(3)*	2.1		2.5		3.9		ns
t_{INH} *(3)*	0.0		0.0		0.0		ns
t_{OUTCO} *(3)*	2.0	4.9	2.0	5.9	2.0	7.6	ns
t_{INSU} *(4)*	1.1		1.5		–		ns
t_{INH} *(4)*	0.0		0.0		–		ns
t_{OUTCO} *(4)*	0.5	3.9	0.5	4.9	–	–	ns
t_{PCISU}	3.0		4.2		–		ns
t_{PCIH}	0.0		0.0		–		ns
t_{PCICO}	2.0	6.0	2.0	7.5	–	–	ns

Table 46. EP1K50 Device EAB Internal Microparameters *Note (1)*

Symbol	Speed Grade						Unit
	-1		-2		-3		
	Min	Max	Min	Max	Min	Max	
$t_{EABDATA1}$		1.7		2.4		3.2	ns
$t_{EABDATA2}$		0.4		0.6		0.8	ns
t_{EABWE1}		1.0		1.4		1.9	ns
t_{EABWE2}		0.0		0.0		0.0	ns
t_{EABRE1}		0.0		0.0		0.0	
t_{EABRE2}		0.4		0.6		0.8	
t_{EABCLK}		0.0		0.0		0.0	ns
t_{EABCO}		0.8		1.1		1.5	ns
$t_{EABBYPASS}$		0.0		0.0		0.0	ns
t_{EABSU}	0.7		1.0		1.3		ns
t_{EABH}	0.4		0.6		0.8		ns
t_{EABCLR}	0.8		1.1		1.5		
t_{AA}		2.0		2.8		3.8	ns
t_{WP}	2.0		2.8		3.8		ns
t_{RP}	1.0		1.4		1.9		
t_{WDSU}	0.5		0.7		0.9		ns
t_{WDH}	0.1		0.1		0.2		ns
t_{WASU}	1.0		1.4		1.9		ns
t_{WAH}	1.5		2.1		2.9		ns
t_{RASU}	1.5		2.1		2.8		
t_{RAH}	0.1		0.1		0.2		
t_{WO}		2.1		2.9		4.0	ns
t_{DD}		2.1		2.9		4.0	ns
t_{EABOUT}		0.0		0.0		0.0	ns
t_{EABCH}	1.5		2.0		2.5		ns
t_{EABCL}	1.5		2.0		2.5		ns

Table 57. EP1K100 External Bidirectional Timing Parameters *Notes (1), (2)*

Symbol	Speed Grade						Unit
	-1		-2		-3		
	Min	Max	Min	Max	Min	Max	
$t_{INSUBIDIR}$ *(3)*	1.7		2.5		3.3		ns
$t_{INHBIDIR}$ *(3)*	0.0		0.0		0.0		ns
$t_{INSUBIDIR}$ *(4)*	2.0		2.8		–		ns
$t_{INHBIDIR}$ *(4)*	0.0		0.0		–		ns
$t_{OUTCOBIDIR}$ *(3)*	2.0	5.2	2.0	6.9	2.0	9.1	ns
$t_{XZBIDIR}$ *(3)*		5.6		7.5		10.1	ns
$t_{ZXBIDIR}$ *(3)*		5.6		7.5		10.1	ns
$t_{OUTCOBIDIR}$ *(4)*	0.5	3.0	0.5	4.6	–	–	ns
$t_{XZBIDIR}$ *(4)*		4.6		6.5		–	ns
$t_{ZXBIDIR}$ *(4)*		4.6		6.5		–	ns

Notes to tables:

(1) All timing parameters are described in Tables 22 through 29 in this data sheet.
(2) These parameters are specified by characterization.
(3) This parameter is measured without the use of the ClockLock or ClockBoost circuits.
(4) This parameter is measured with the use of the ClockLock or ClockBoost circuits.

Power Consumption

The supply power (P) for ACEX 1K devices can be calculated with the following equation:

$$P = P_{INT} + P_{IO} = (I_{CCSTANDBY} + I_{CCACTIVE}) \times V_{CC} + P_{IO}$$

The $I_{CCACTIVE}$ value depends on the switching frequency and the application logic. This value is calculated based on the amount of current that each LE typically consumes. The P_{IO} value, which depends on the device output load characteristics and switching frequency, can be calculated using the guidelines given in *Application Note 74 (Evaluating Power for Altera Devices).*

☞ Compared to the rest of the device, the embedded array consumes a negligible amount of power. Therefore, the embedded array can be ignored when calculating supply current.

101 Innovation Drive
San Jose, CA 95134
(408) 544-7000
www.altera.com
Applications Hotline:
(800) 800-EPLD
Literature Services:
lit_req@altera.com

Copyright © 2003 Altera Corporation. All rights reserved. Altera, The Programmable Solutions Company, the stylized Altera logo, specific device designations, and all other words and logos that are identified as trademarks and/or service marks are, unless noted otherwise, the trademarks and service marks of Altera Corporation in the U.S. and other countries. All other product or service names are the property of their respective holders. Altera products are protected under numerous U.S. and foreign patents and pending applications, maskwork rights, and copyrights. Altera warrants performance of its semiconductor products to current specifications in accordance with Altera's standard warranty, but reserves the right to make changes to any products and services at any time without notice. Altera assumes no responsibility or liability arising out of the application or use of any information, product, or service described herein except as expressly agreed to in writing by Altera Corporation. Altera customers are advised to obtain the latest version of device specifications before relying on any published information and before placing orders for products or services.

I.S. EN ISO 9001

Printed on Recycled Paper.