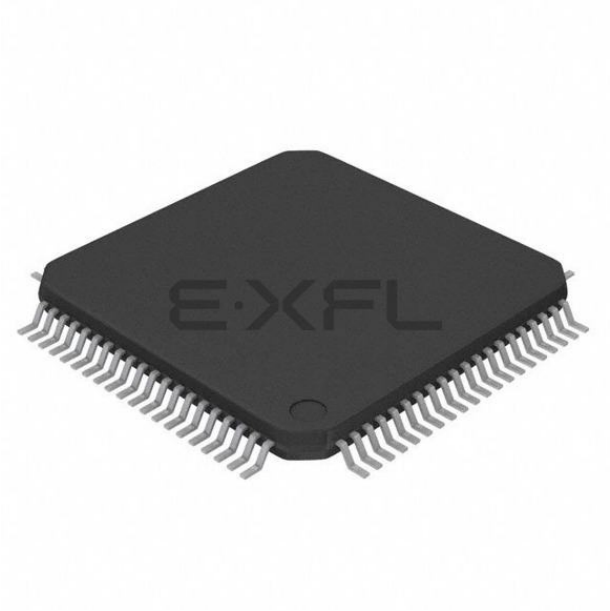

Welcome to E-XFL.COM

What is "Embedded - Microcontrollers"?

"Embedded - Microcontrollers" refer to small, integrated circuits designed to perform specific tasks within larger systems. These microcontrollers are essentially compact computers on a single chip, containing a processor core, memory, and programmable input/output peripherals. They are called "embedded" because they are embedded within electronic devices to control various functions, rather than serving as standalone computers. Microcontrollers are crucial in modern electronics, providing the intelligence and control needed for a wide range of applications.

Applications of "Embedded - Microcontrollers"

Details	
Product Status	Obsolete
Core Processor	ARM® Cortex®-M3
Core Size	32-Bit Single-Core
Speed	80MHz
Connectivity	EBI/EMI, I²C, IrDA, SmartCard, SPI, UART/USART
Peripherals	Brown-out Detect/Reset, DMA, I²S, POR, PWM, WDT
Number of I/O	65
Program Memory Size	128KB (128K x 8)
Program Memory Type	FLASH
EEPROM Size	-
RAM Size	32K x 8
Voltage - Supply (Vcc/Vdd)	1.8V ~ 3.6V
Data Converters	A/D 32x12b; D/A 2x10b
Oscillator Type	Internal
Operating Temperature	-40°C ~ 85°C (TA)
Mounting Type	Surface Mount
Package / Case	80-TQFP
Supplier Device Package	80-TQFP (12x12)
Purchase URL	https://www.e-xfl.com/product-detail/silicon-labs/sim3c157-b-gqr

2. Typical Connection Diagrams

This section provides typical connection diagrams for SiM3C1xx devices.

2.1. Power

Figure 2.1 shows a typical connection diagram for the power pins of the SiM3C1xx devices when the internal regulator is in use.

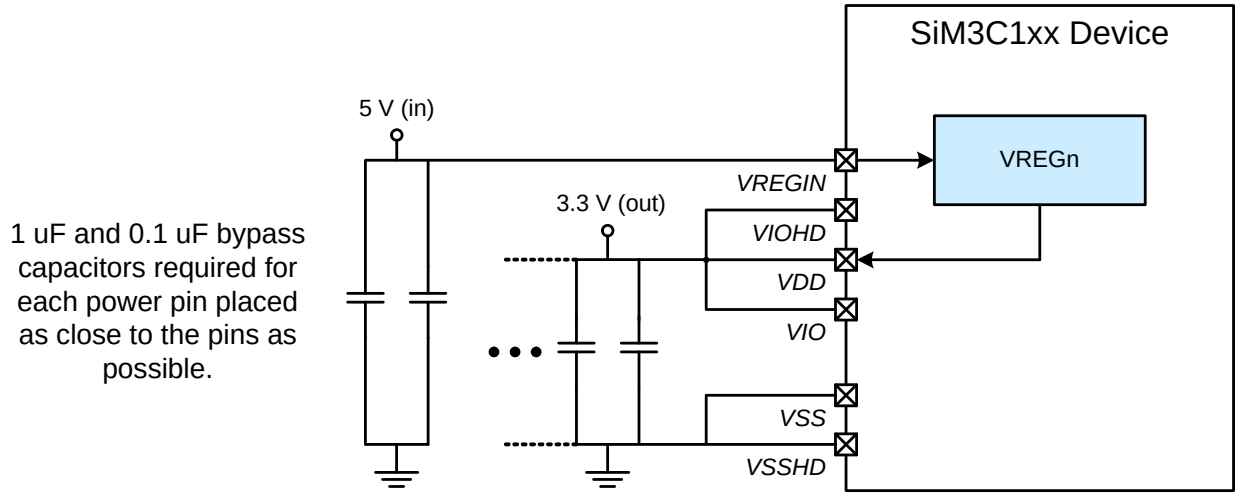

Figure 2.1. Connection Diagram with Voltage Regulator Used

Figure 2.2 shows a typical connection diagram for the power pins of the SiM3C1xx devices when the internal regulator is not used.

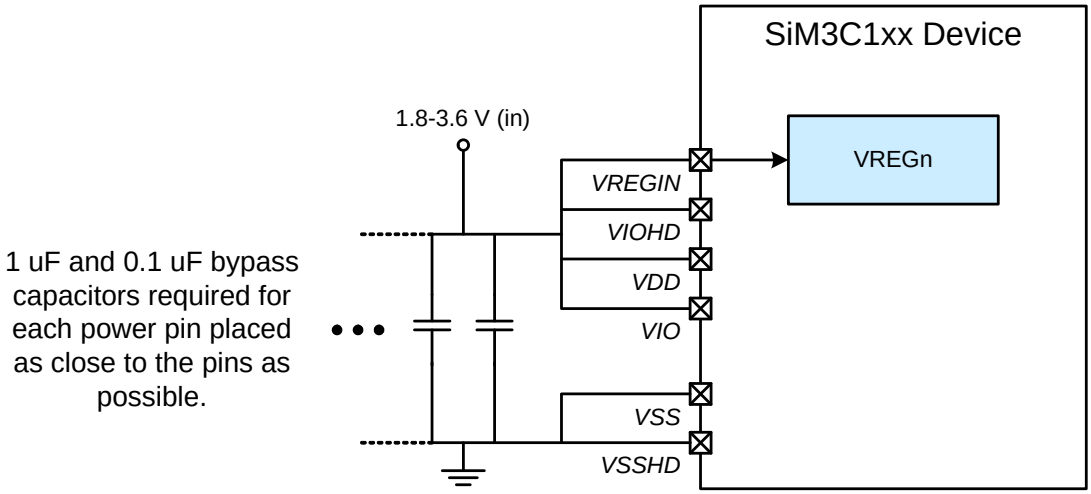

Figure 2.2. Connection Diagram with Voltage Regulator Not Used

Table 3.2. Power Consumption (Continued)

Parameter	Symbol	Test Condition	Min	Typ	Max	Unit
Power Mode 9[2,3]—Low Power Shutdown with VREG0 disabled, powered through VDD and VIO	I_{DD}	RTC Disabled, V_{DD} = 1.8 V, T_A = 25 °C	—	85	—	nA
		RTC w/ 16.4 kHz LFO, V_{DD} = 1.8 V, T_A = 25 °C	—	350	—	nA
		RTC w/ 32.768 kHz Crystal, V_{DD} = 1.8 V, T_A = 25 °C	—	620	—	nA
		RTC Disabled, V_{DD} = 3.0 V, T_A = 25 °C	—	145	—	nA
		RTC w/ 16.4 kHz LFO, V_{DD} = 3.0 V, T_A = 25 °C	—	500	—	nA
		RTC w/ 32.768 kHz Crystal, V_{DD} = 3.0 V, T_A = 25 °C	—	800	—	nA
Power Mode 9[2,3]—Low Power Shutdown with VREG0 in low-power mode, VDD and VIO powered through VREG0 (Includes VREG0 current)	I_{VREGIN}	RTC Disabled, VREGIN = 5 V, T_A = 25 °C	—	300	—	nA
		RTC w/ 16.4 kHz LFO, VREGIN = 5 V, T_A = 25 °C	—	650	—	nA
		RTC w/ 32.768 kHz Crystal, VREGIN = 5 V, T_A = 25 °C	—	950	—	nA
VIOHD Current (High-drive I/O disabled)	I_{VIOHD}	HV Mode (default)	—	2.5	5	µA
		LV Mode	—	2	—	nA

Notes:
1. Perhipheral currents drop to zero when peripheral clock and peripheral are disabled, unless otherwise noted.
2. Currents are additive. For example, where I_{DD} is specified and the mode is not mutually exclusive, enabling the functions increases supply current by the specified amount.
3. Includes all peripherals that cannot have clocks gated in the Clock Control module.
4. Includes supply current from internal regulator and PLL0OSC (>20 MHz) or LPOSC0 (<=20 MHz).
5. Flash execution numbers use 2 wait states for 80 MHz and 0 wait states at 20 MHz or less.
6. RAM execution numbers use 0 wait states for all frequencies.
7. IDAC output current and IVC input current not included.
8. Bias current only. Does not include dynamic current from oscillator running at speed.

Table 3.6. External Regulator

Parameter	Symbol	Test Condition	Min	Typ	Max	Unit
Input Voltage Range (at VREGIN)	V_{REGIN}		3.0	—	3.6	V
Output Voltage (at EXREGOUT)	$V_{EXREGOUT}$	Programmable in 100 mV steps	1.8	—	3.6	V
NPN Current Drive	I_{NPN}	400 mV Dropout	12	—	—	mA
PNP Current Drive	I_{PNP}	$V_{EXREGBD} > V_{REGIN}$- 1.5 V	–6	—	—	mA
EXREGBD Voltage (PNP Mode)	$V_{EXREGBD}$	V_{REGIN} >= 3.5 V	V_{REGIN} – 2.0	—	—	V
		V_{REGIN} < 3.5 V	1.5	—	—	V
Standalone Mode Output Current	$I_{EXTREGBD}$	400 mV Dropout	—	—	11.5	mA
External Capacitance with External BJT	C_{BJT}		4.7	—	—	µF
Standalone Mode Load Regulation	$LR_{STAND-ALONE}$		—	1	—	mV/mA
Standalone Mode External Capacitance	$C_{STAND-ALONE}$		47	—	—	nF
Current Limit Range	I_{LIMIT}	1 Ω Sense Resistor	10	—	720	mA
Current Limit Accuracy			—	—	10	%
Foldback Limit Accuracy			—	—	20	%
Current Sense Resistor	R_{SENSE}		—	—	1	Ω
Internal Pull-Down	R_{PD}		—	5	—	kΩ
Internal Pull-Up	R_{PU}		—	10	—	kΩ
Current Sensor						
Sensing Pin Voltage	$V_{EXTREGSP}$ $V_{EXTREGSN}$	Measured at EXTREGSP or EXTREGSN pin	2.2	—	V_{REGIN}	V
Differential Sensing Voltage	V_{DIFF}	($V_{EXTREGSP}$ – $V_{EXTREGSN}$)	10	—	1600	mV
Current at EXTREGSN Pin	$I_{EXTREGSN}$		—	8	—	µA
Current at EXTREGSP Pin	$I_{EXTREGSP}$		—	V_{DIFF} x 200 + 12	—	µA

Table 3.17. Port I/O

Parameter	Symbol	Test Condition	Min	Typ	Max	Unit
Standard I/O (PB0, PB1, and PB2), 5 V Tolerant I/O (PB3), and $\overline{\text{RESET}}$						
Output High Voltage*	V_{OH}	Low Drive, I_{OH} = –2 mA	V_{IO} – 0.7	—	—	V
		High Drive, I_{OH} = –5 mA	V_{IO} – 0.7	—	—	V
Output Low Voltage*	V_{OL}	Low Drive, I_{OL} = 3 mA	—	—	0.6	V
		High Drive, I_{OL} = 12.5 mA	—	—	0.6	V
Input High Voltage	V_{IH}	$1.8 \le V_{IO} \le 2.0$	0.7 x V_{IO}	—	—	V
		$2.0 \le V_{IO} \le 3.6$	V_{IO} – 0.6	—	—	V
Input Low Voltage	V_{IL}		—	—	0.6	V
Pin Capacitance	C_{IO}	PB0, PB1 and PB2 Pins	—	4	—	pF
		PB3 Pins	—	7	—	pF
Weak Pull-Up Current (Input Voltage = 0 V)	I_{PU}	V_{IO} = 1.8	–6	–3.5	–2	µA
		V_{IO} = 3.6	–30	–20	–10	µA
Input Leakage (Pullups off or Analog)	I_{LK}	$0 \le V_{IN} \le V_{IO}$	–1	—	1	µA
Input Leakage Current of Port Bank 3 I/O, V_{IN} above V_{IO}	I_L	$V_{IO} < V_{IN} < V_{IO}$+2.0 V (pins without EXREG functions)	0	5	150	µA
		$V_{IO} < V_{IN} < V_{REGIN}$ (pins with EXREG functions)	0	5	150	µA
High Drive I/O (PB4)						
Output High Voltage	V_{OH}	Standard Mode, Low Drive, I_{OH} = –3 mA	V_{IOHD} – 0.7	—	—	V
		Standard Mode, High Drive, I_{OH} = –10 mA	V_{IOHD} – 0.7	—	—	V
Output Low Voltage	V_{OL}	Standard Mode, Low Drive, I_{OH} = 3 mA	—	—	0.6	V
		Standard Mode, High Drive, I_{OH} = 12.5 mA	—	—	0.6	V
Output Rise Time	t_R	Slew Rate Mode 0, V_{IOHD} = 5 V	—	50	—	ns
		Slew Rate Mode 1, V_{IOHD} = 5 V	—	300	—	ns
		Slew Rate Mode 2, V_{IOHD} = 5 V	—	1	—	µs
		Slew Rate Mode 3, V_{IOHD} = 5 V	—	3	—	µs

***Note:** $\overline{\text{RESET}}$ does not drive to logic high. Specifications for $\overline{\text{RESET}}$ V_{OL} adhere to the low drive setting.

4.5.3. Real-Time Clock (RTC0)

The RTC0 module includes a 32-bit timer that allows up to 36 hours of independent time-keeping when used with a 32.768 kHz watch crystal. The RTC0 provides three alarm events in addition to a missing clock event, which can also function as interrupt, reset, or wakeup sources on SiM3C1xx devices.

The RTC0 module includes internal loading capacitors that are programmable to 16 discrete levels, allowing compatibility with a wide range of crystals.

The RTC0 output can be buffered and routed to a port bank pin to provide an accurate, low frequency clock to other devices while the core is in its lowest power down mode. The module also includes a low power internal low frequency oscillator that reduces low power mode current and is available for other modules to use as a clock source.

The RTC module includes the following features:

- 32-bit timer (supports up to 36 hours) with three separate alarms.
- Option for one alarm to automatically reset the RTC timer.
- Missing clock detector.
- Can be used with the internal low frequency oscillator (LFOSC0), an external 32.768 kHz crystal (no additional resistors or capacitors necessary), or with an external CMOS clock.
- Programmable internal loading capacitors support a wide range of external 32.768 kHz crystals.
- Operates directly from VDD and remains operational even when the device goes into its lowest power down mode.
- The RTC timer clock (RTC0TCLK) can be buffered and routed to an I/O pin to provide an accurate, low frequency clock to other devices while the core is in its lowest power down mode.

4.5.4. Low Power Timer (LPTIMER0)

The Low Power Timer (LPTIMER0) module runs from the clock selected by the RTC0 module, allowing the LPTIMER0 to operate even if the AHB and APB clocks are disabled. The LPTIMER0 counter can increment using one of two clock sources: the clock selected by the RTC0 module, or rising or falling edges of an external signal.

The Low Power Timer includes the following features:

- Runs on a low-frequency clock (RTC0TCLK)
- The LPTIMER counter can increment using one of two clock sources: the RTC0TCLK or rising or falling edges of an external signal.
- Overflow and threshold-match detection, which can generate an interrupt, reset the timer, or wake some devices from low power modes.
- Timer reset on threshold-match allows square-wave generation at a variable output frequency.

4.5.5. Watchdog Timer (WDTIMER0)

The WDTIMER0 module includes a 16-bit timer, a programmable early warning interrupt, and a programmable reset period. The timer registers are protected from inadvertent access by an independent lock and key interface.

The watchdog timer runs from the low frequency oscillator (LFOSC0).

The Watchdog Timer has the following features:

- Programmable timeout interval.
- Optional interrupt to warn when the Watchdog Timer is nearing the reset trip value.
- Lock-out feature to prevent any modification until a system reset.

4.8. Reset Sources

Reset circuitry allows the controller to be easily placed in a predefined default condition. On entry to this reset state, the following occur:

- The core halts program execution.
- Module registers are initialized to their defined reset values unless the bits reset only with a power-on reset.
- External port pins are forced to a known state.
- Interrupts and timers are disabled.
- Clocks to all AHB peripherals are enabled.
- Clocks to all APB peripherals other than Watchdog Timer, EMIF0, and DMAXBAR are disabled.

All registers are reset to the predefined values noted in the register descriptions unless the bits only reset with a power-on reset. The contents of RAM are unaffected during a reset; any previously stored data is preserved as long as power is not lost.

The Port I/O latches are reset to 1 in open-drain mode. Weak pullups are enabled during and after the reset. For VDD Supply Monitor and power-on resets, the $\overline{\text{RESET}}$ pin is driven low until the device exits the reset state.

On exit from the reset state, the program counter (PC) is reset, and the system clock defaults to an internal oscillator. The Watchdog Timer is enabled with the Low Frequency Oscillator (LFO0) as its clock source. Program execution begins at location 0x00000000.

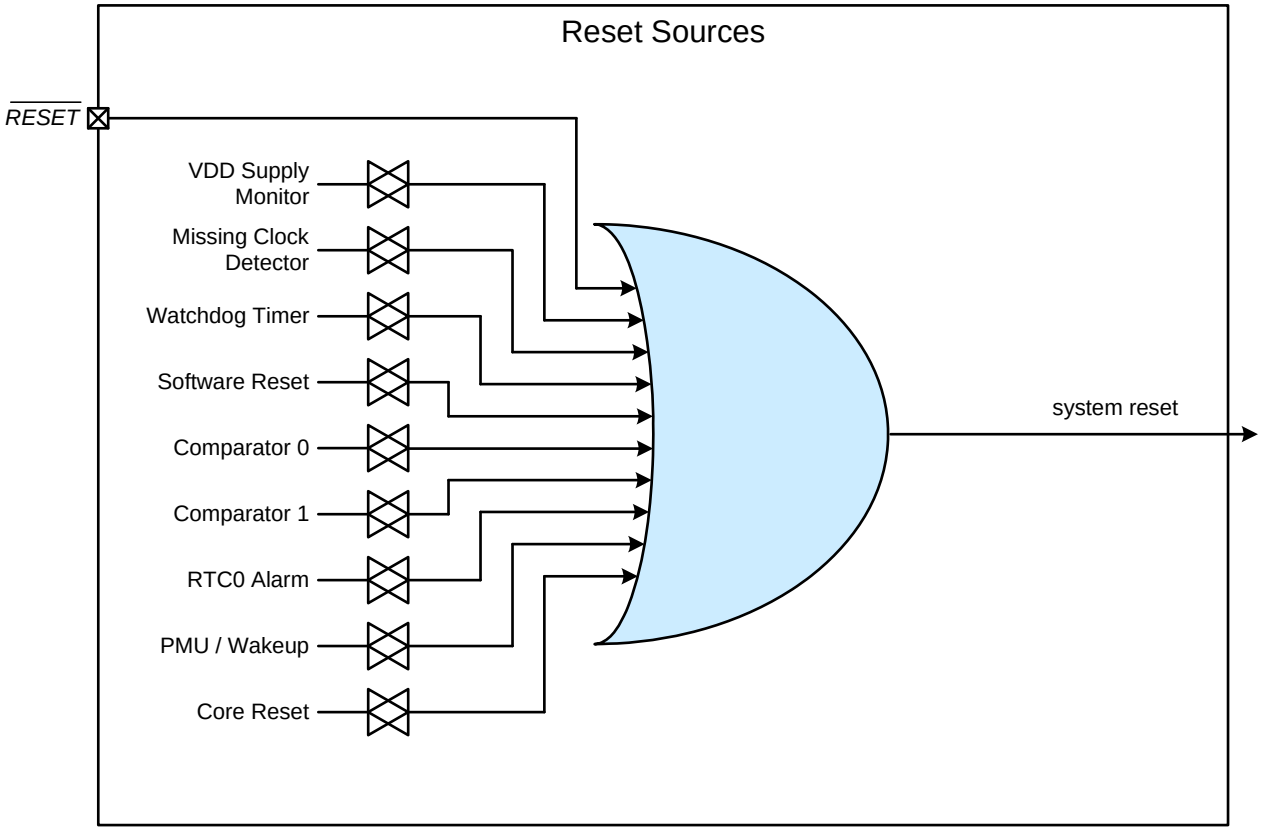

6. Pin Definitions and Packaging Information

6.1. SiM3C1x7 Pin Definitions

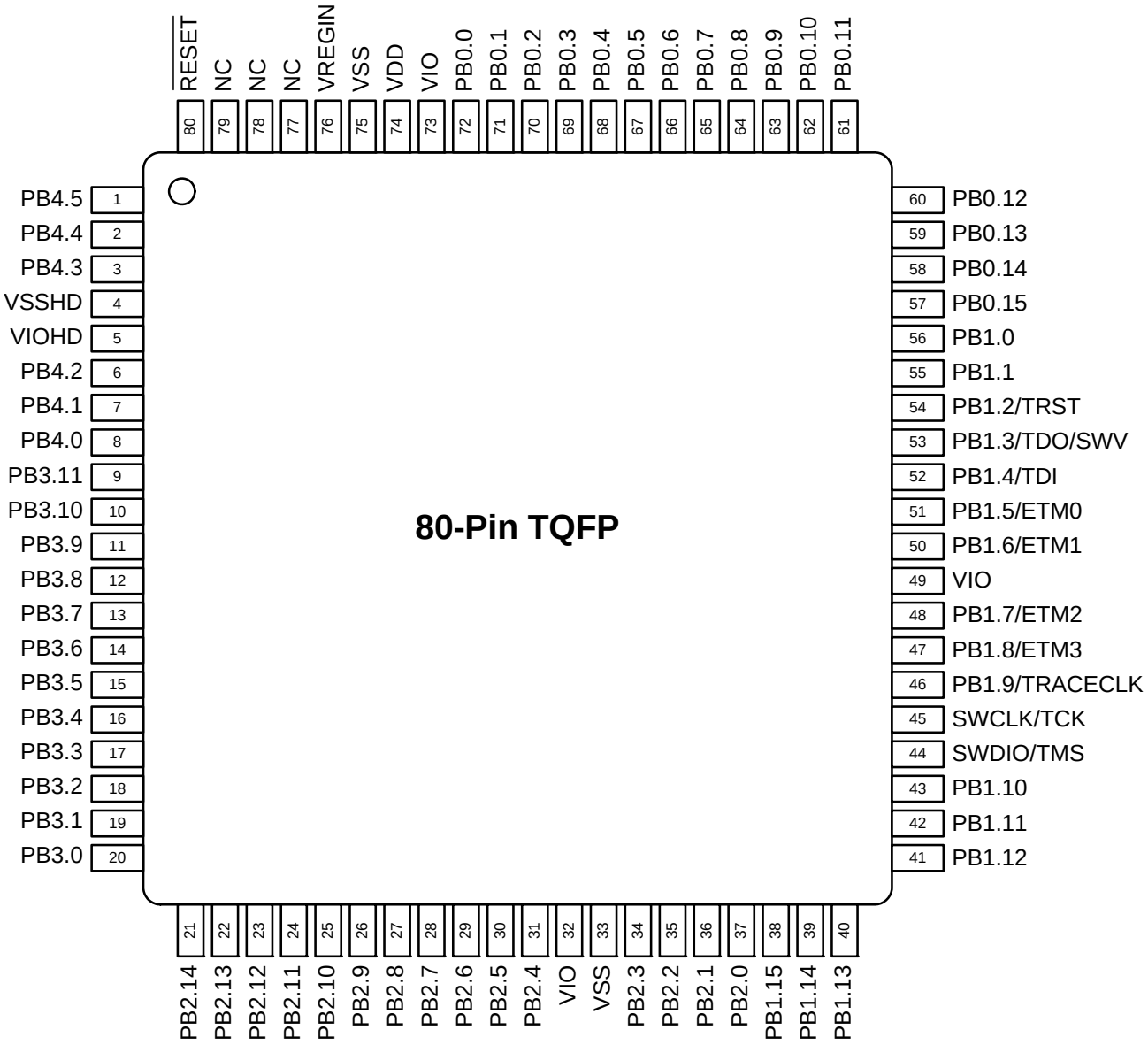

Figure 6.1. SiM3C1x7-GQ Pinout

Table 6.1. Pin Definitions and alternate functions for SiM3C1x7

Pin Name	Type	Pin Numbers TQFP-80	Pin Numbers LGA-92	Crossbar Capability (see Port Config Section)	Port Match	External Memory Interface (m = muxed mode)	Port-Mapped Level Shifter	Output Toggle Logic	External Trigger Inputs	Analog or Additional Functions
VSS	Ground	33 75	B15 B34							
VDD	Power (Core)	74	A44							
VIO	Power (I/O)	32 49 73	A19 A29 A43							
VREGIN	Power (Regulator)	76	A45							
VSSHD	Ground (High Drive)	4	B2							
VIOHD	Power (High Drive)	5	A3							
$\overline{\text{RESET}}$	Active-low Reset	80	A48							
SWCLK/TCK	Serial Wire/JTAG	45	B20							
SWDIO/TMS	Serial Wire/JTAG	44	A27							
PB0.0	Standard I/O	72	B33	XBR0	✓					ADC0.0
PB0.1	Standard I/O	71	B32	XBR0	✓					ADC0.1 CS0.0
PB0.2	Standard I/O	70	A42	XBR0	✓					ADC0.2 CS0.1
PB0.3	Standard I/O	69	B31	XBR0	✓					ADC0.3 CS0.2
PB0.4	Standard I/O	68	A41	XBR0	✓					ADC0.4 CS0.3
PB0.5	Standard I/O	67	B30	XBR0	✓					ADC0.5 CS0.4
PB0.6	Standard I/O	66	A40	XBR0	✓					CS0.5
PB0.7	Standard I/O	65	B29	XBR0	✓					ADC0.6 CS0.6 IVC0.0

Table 6.1. Pin Definitions and alternate functions for SiM3C1x7 (Continued)

Pin Name	Type	Pin Numbers TQFP-80	Pin Numbers LGA-92	Crossbar Capability (see Port Config Section)	Port Match	External Memory Interface (m = muxed mode)	Port-Mapped Level Shifter	Output Toggle Logic	External Trigger Inputs	Analog or Additional Functions
PB4.0	High Drive I/O	8	A6				LSO0			
PB4.1	High Drive I/O	7	A5				LSO1			
PB4.2	High Drive I/O	6	A4				LSO2			
PB4.3	High Drive I/O	3	A2				LSO3			
PB4.4	High Drive I/O	2	A1				LSO4			
PB4.5	High Drive I/O	1	D1				LSO5			

Note: All unnamed pins on the LGA-92 package are no-connect pins. They should be soldered to the PCB for mechanical stability, but have no internal connections to the device.

Table 6.2. Pin Definitions and alternate functions for SiM3C1x6

Pin Name	Type	Pin Numbers	Crossbar Capability (see Port Config Section)	Port Match	External Memory Interface (m = muxed mode)	Port-Mapped Level Shifter	Output Toggle Logic	External Trigger Inputs	Analog or Additional Functions
VSS	Ground	25 59							
VDD	Power (Core)	58							
VIO	Power (I/O)	24 39							
VREGIN	Power (Regulator)	60							
VSSHD	Ground (High Drive)	2							
VIOHD	Power (High Drive)	3							
$\overline{\text{RESET}}$	Active-low Reset	64							
SWCLK/TCK	Serial Wire / JTAG	36							
SWDIO/TMS	Serial Wire / JTAG	35							
PB0.0	Standard I/O	57	XBR0	✓					ADC0.2 CS0.1
PB0.1	Standard I/O	56	XBR0	✓					ADC0.3 CS0.2
PB0.2	Standard I/O	55	XBR0	✓					ADC0.4 CS0.3
PB0.3	Standard I/O	54	XBR0	✓					ADC0.5 CS0.4
PB0.4	Standard I/O	53	XBR0	✓					ADC0.6 CS0.5 IVC0.0
PB0.5	Standard I/O	52	XBR0	✓					ADC0.7 CS0.6 IVC0.1
PB0.6	Standard I/O	51	XBR0	✓					ADC0.8 CS0.7 RTC1

Table 6.2. Pin Definitions and alternate functions for SiM3C1x6 (Continued)

Pin Name	Type	Pin Numbers	Crossbar Capability (see Port Config Section)	Port Match	External Memory Interface (m = muxed mode)	Port-Mapped Level Shifter	Output Toggle Logic	External Trigger Inputs	Analog or Additional Functions
PB0.7	Standard I/O	50	XBR0	✓					RTC2
PB0.8	Standard I/O	49	XBR0	✓					ADC0.9 VREFGND
PB0.9	Standard I/O	48	XBR0	✓					ADC0.10 VREF
PB0.10	Standard I/O	47	XBR0	✓					ADC1.6 IDAC0
PB0.11	Standard I/O	46	XBR0	✓					IDAC1
PB0.12	Standard I/O	45	XBR0	✓					XTAL1
PB0.13	Standard I/O	44	XBR0	✓					XTAL2
PB0.14/TDO/ SWV	Standard I/O / JTAG / Serial Wire Viewer	43	XBR0	✓					ADC0.12 ADC1.12
PB0.15/TDI	Standard I/O / JTAG	42	XBR0	✓					ADC0.13 ADC1.13
PB1.0	Standard I/O	41	XBR0	✓					ADC0.14 ADC1.14
PB1.1	Standard I/O	40	XBR0	✓					ADC0.15 ADC1.15
PB1.2	Standard I/O	38	XBR0	✓					ADC1.11 CS0.8
PB1.3	Standard I/O	37	XBR0	✓					ADC1.10 CS0.9
PB1.4	Standard I/O	34	XBR0	✓					ADC1.8
PB1.5	Standard I/O	33	XBR0	✓					ADC1.7
PB1.6	Standard I/O	32	XBR0	✓				ADC0T15 WAKE.0	ADC1.5 CS0.10
PB1.7	Standard I/O	31	XBR0	✓	AD15m/ A7			ADC1T15 WAKE.1	ADC1.4 CS0.11

6.3. SiM3C1x4 Pin Definitions

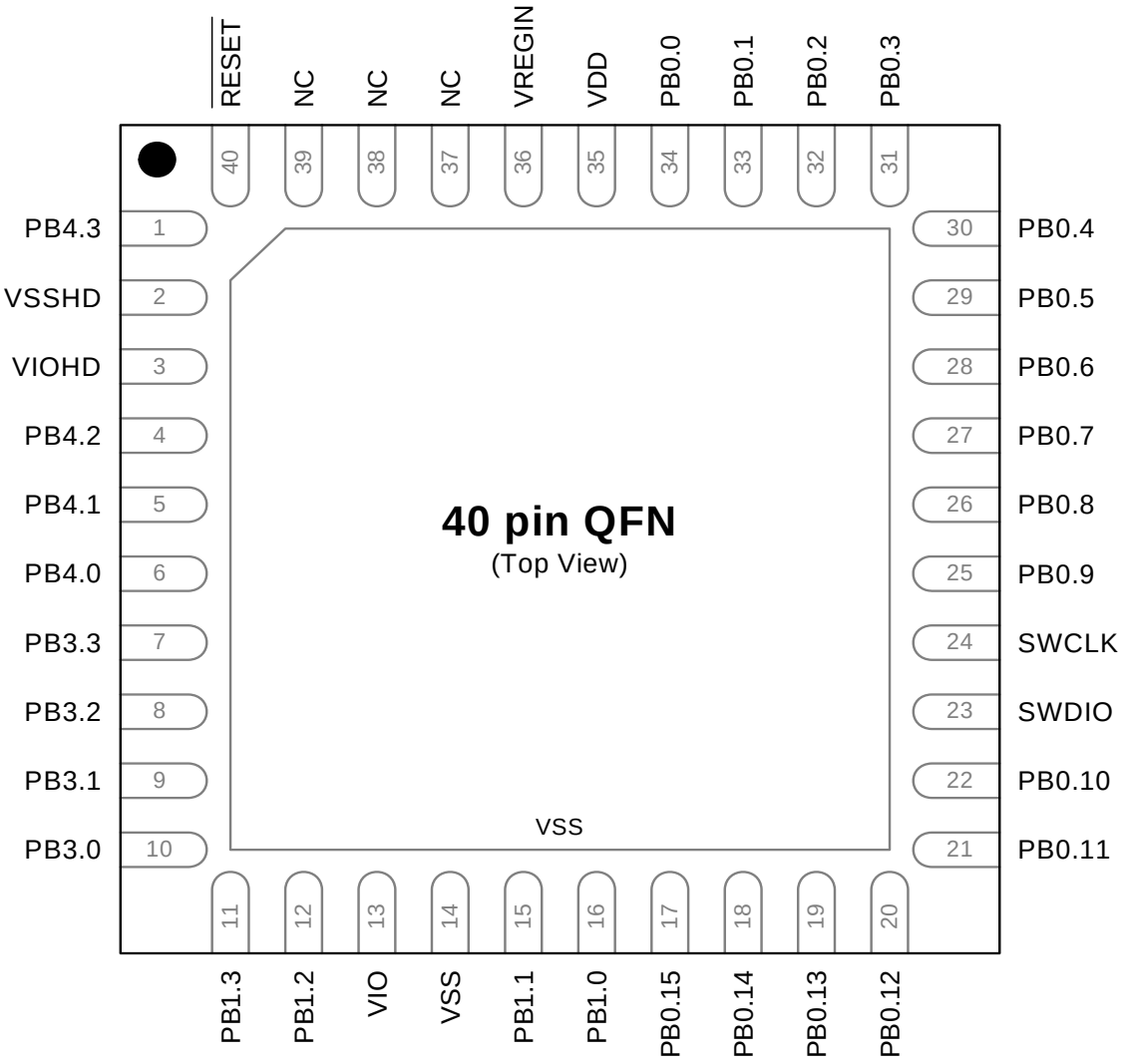

Figure 6.5. SiM3C1x4-GM Pinout

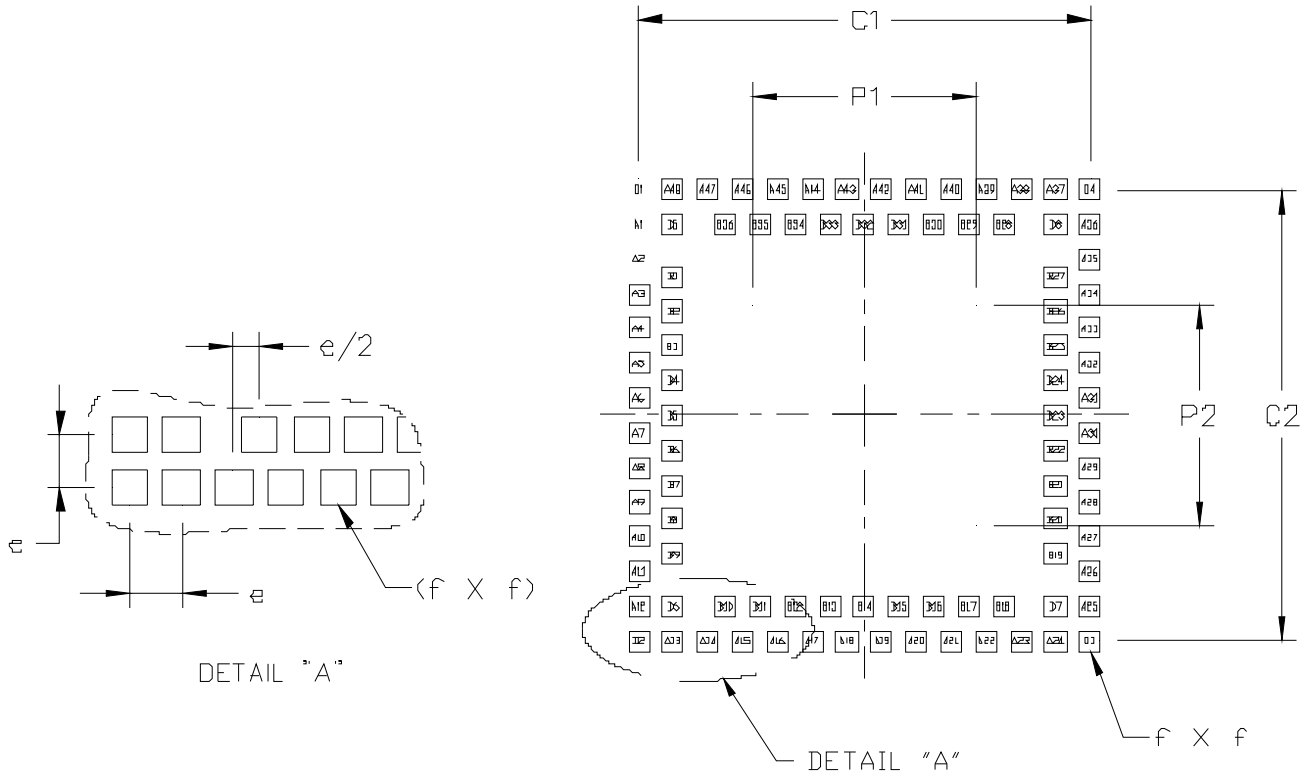

Figure 6.7. LGA-92 Landing Diagram

Table 6.5. LGA-92 Landing Diagram Dimensions

Dimension	Typical	Max
C1	6.50	—
C2	6.50	—
e	0.50	—
f	—	0.35
P1	—	3.20
P2	—	3.20

Notes:

1. All dimensions shown are in millimeters (mm) unless otherwise noted.
2. All feature sizes shown are at Maximum Material Condition (MMC) and a card fabrication tolerance of 0.05 mm is assumed.
3. Dimensioning and Tolerancing is per the ANSI Y14.5M-1994 specification.
4. This land pattern design is based on the IPC-7351 guidelines.

6.5. TQFP-80 Package Specifications

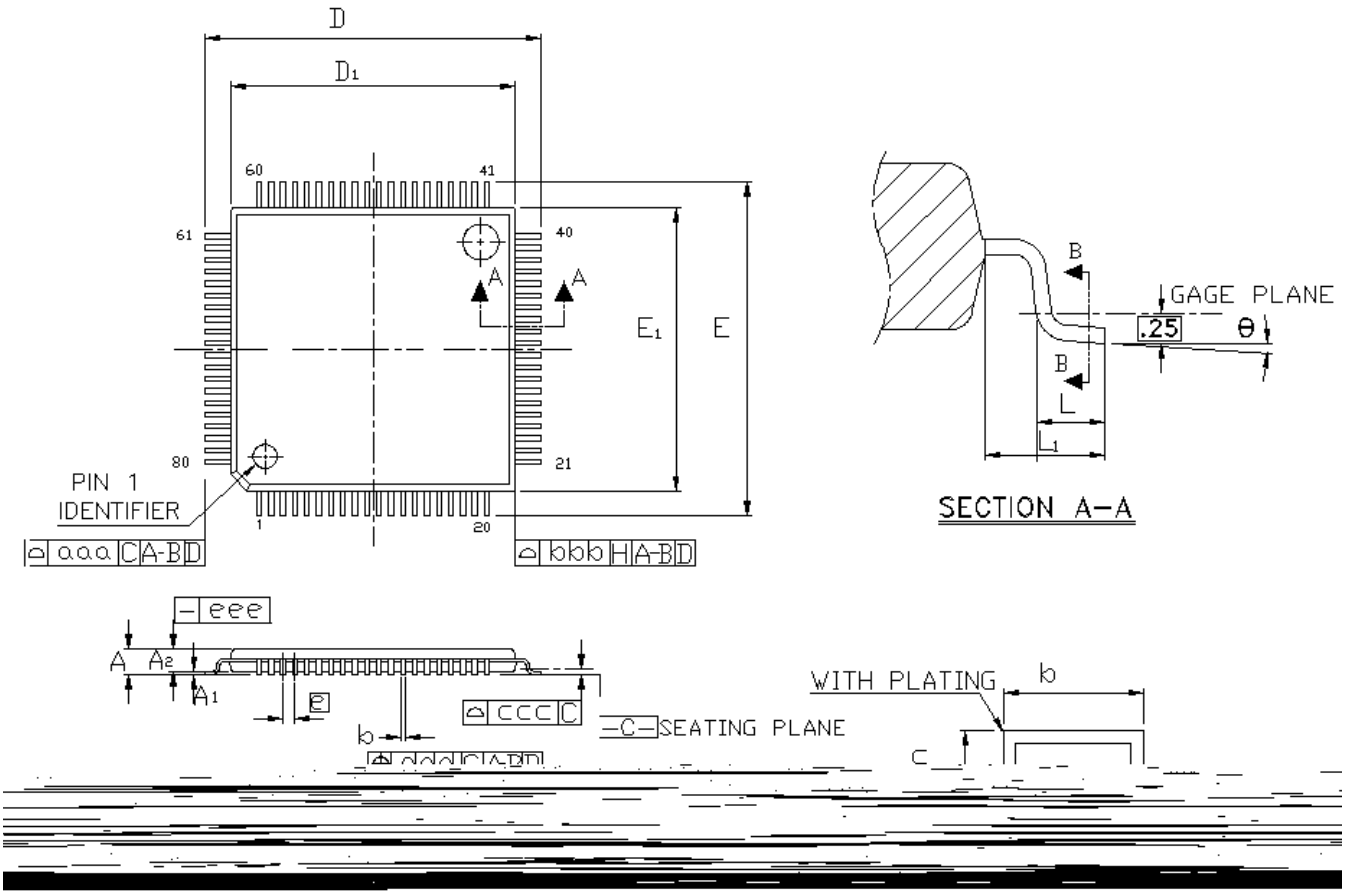

Figure 6.8. TQFP-80 Package Drawing

Table 6.6. TQFP-80 Package Dimensions

Dimension	Min	Nominal	Max
A	—	—	1.20
A1	0.05	—	0.15
A2	0.95	1.00	1.05
b	0.17	0.20	0.27
c	0.09	—	0.20
D	14.00 BSC		
D1	12.00 BSC		
e	0.50 BSC		
E	14.00 BSC		
E1	12.00 BSC		

6.6. QFN-64 Package Specifications

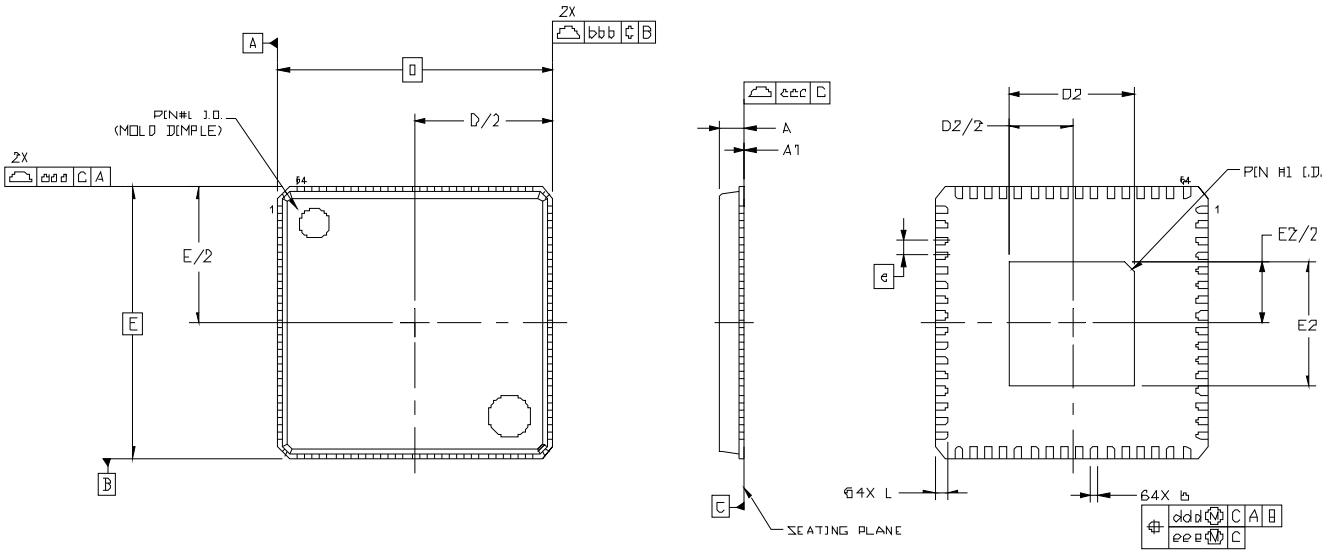

Figure 6.10. QFN-64 Package Drawing

Table 6.8. QFN-64 Package Dimensions

Dimension	Min	Nominal	Max
A	0.80	0.85	0.90
A1	0.00	0.02	0.05
b	0.18	0.25	0.30
D		9.00 BSC	
D2	3.95	4.10	4.25
e		0.50 BSC	
E		9.00 BSC	
E2	3.95	4.10	4.25
L	0.30	0.40	0.50
aaa		0.10	
bbb		0.10	
ccc		0.08	
ddd		0.10	
eee		0.05	

Notes:
1. All dimensions shown are in millimeters (mm) unless otherwise noted.
2. Dimensioning and Tolerancing per ANSI Y14.5M-1994.
3. This package outline conforms to JEDEC MO-220.
4. Recommended card reflow profile is per the JEDEC/IPC J-STD-020 specification for Small Body Components.

Figure