AMD Xilinx - XCV50-4PQ240I Datasheet

Welcome to E-XFL.COM

Understanding Embedded - FPGAs (Field Programmable Gate Array)

Embedded - FPGAs, or Field Programmable Gate Arrays, are advanced integrated circuits that offer unparalleled flexibility and performance for digital systems. Unlike traditional fixed-function logic devices, FPGAs can be programmed and reprogrammed to execute a wide array of logical operations, enabling customized functionality tailored to specific applications. This reprogrammability allows developers to iterate designs quickly and implement complex functions without the need for custom hardware.

Applications of Embedded - FPGAs

The versatility of Embedded - FPGAs makes them indispensable in numerous fields. In telecommunications.

Details	
Product Status	Obsolete
Number of LABs/CLBs	384
Number of Logic Elements/Cells	1728
Total RAM Bits	32768
Number of I/O	166
Number of Gates	57906
Voltage - Supply	2.375V ~ 2.625V
Mounting Type	Surface Mount
Operating Temperature	-40°C ~ 100°C (TJ)
Package / Case	240-BFQFP
Supplier Device Package	240-PQFP (32x32)
Purchase URL	https://www.e-xfl.com/product-detail/xilinx/xcv50-4pq240i

Virtex Device/Package Combinations and Maximum I/O

Table 3: **Virtex Family Maximum User I/O by Device/Package (Excluding Dedicated Clock Pins)**

Package	XCV50	XCV100	XCV150	XCV200	XCV300	XCV400	XCV600	XCV800	XCV1000
CS144	94	94							
TQ144	98	98							
PQ240	166	166	166	166	166				
HQ240						166	166	166	
BG256	180	180	180	180					
BG352			260	260	260				
BG432					316	316	316	316	
BG560						404	404	404	404
FG256	176	176	176	176					
FG456			260	284	312				
FG676						404	444	444	
FG680							512	512	512

Virtex Ordering Information

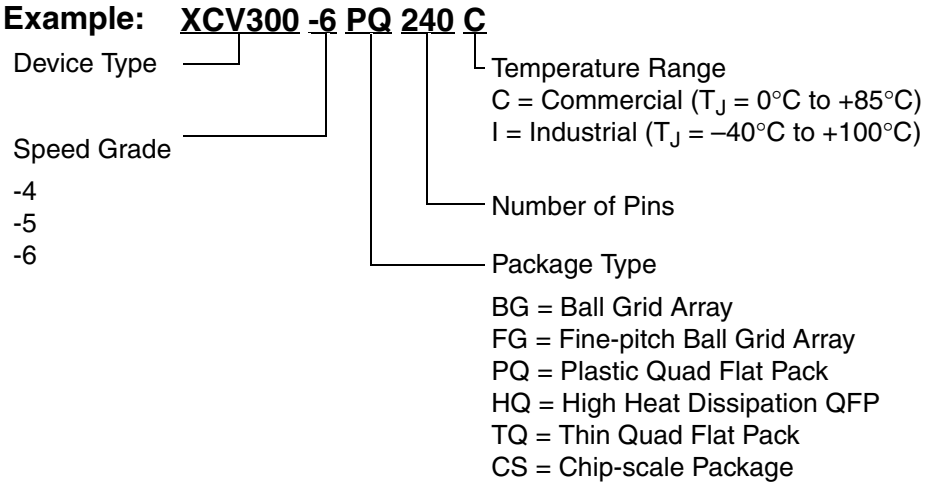

Figure 1: **Virtex Ordering Information**

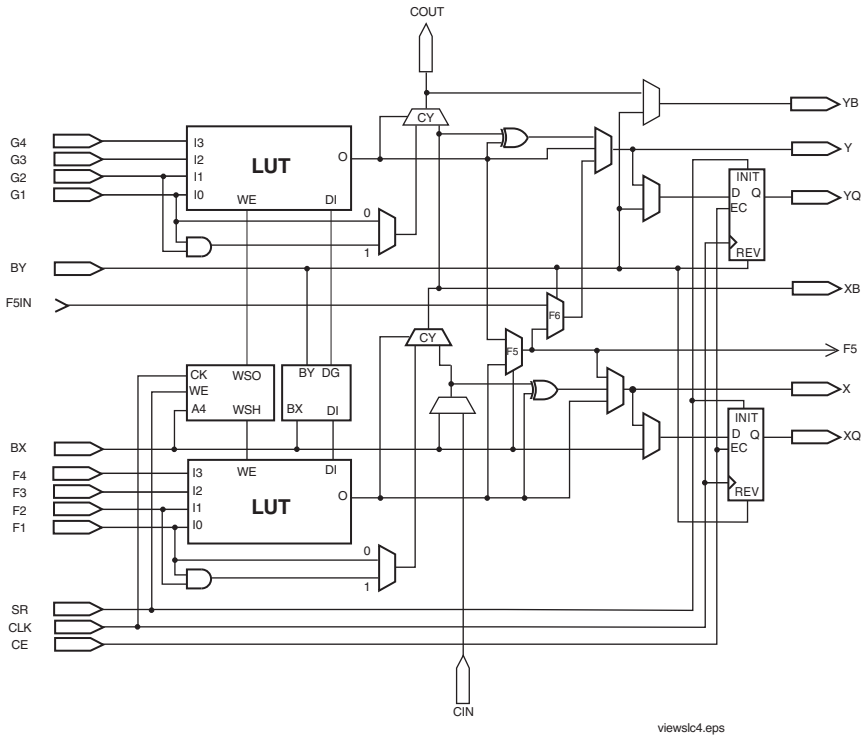

Figure 5: **Detailed View of Virtex Slice**

Additional Logic

The F5 multiplexer in each slice combines the function generator outputs. This combination provides either a function generator that can implement any 5-input function, a 4:1 multiplexer, or selected functions of up to nine inputs.

Similarly, the F6 multiplexer combines the outputs of all four function generators in the CLB by selecting one of the F5-multiplexer outputs. This permits the implementation of any 6-input function, an 8:1 multiplexer, or selected functions of up to 19 inputs.

Each CLB has four direct feedthrough paths, one per LC. These paths provide extra data input lines or additional local routing that does not consume logic resources.

Arithmetic Logic

Dedicated carry logic provides fast arithmetic carry capability for high-speed arithmetic functions. The Virtex CLB supports two separate carry chains, one per Slice. The height of the carry chains is two bits per CLB.

The arithmetic logic includes an XOR gate that allows a 1-bit full adder to be implemented within an LC. In addition, a dedicated AND gate improves the efficiency of multiplier implementation.

The dedicated carry path can also be used to cascade function generators for implementing wide logic functions.

BUFTs

Each Virtex CLB contains two 3-state drivers (BUFTs) that can drive on-chip busses. See **Dedicated Routing**, page 7. Each Virtex BUFT has an independent 3-state control pin and an independent input pin.

Block SelectRAM

Virtex FPGAs incorporate several large block SelectRAM memories. These complement the distributed LUT SelectRAMs that provide shallow RAM structures implemented in CLBs.

Block SelectRAM memory blocks are organized in columns. All Virtex devices contain two such columns, one along each vertical edge. These columns extend the full height of the chip. Each memory block is four CLBs high, and consequently, a Virtex device 64 CLBs high contains 16 memory blocks per column, and a total of 32 blocks.

Table 3 shows the amount of block SelectRAM memory that is available in each Virtex device.

Table 3: **Virtex Block SelectRAM Amounts**

Device	# of Blocks	Total Block SelectRAM Bits
XCV50	8	32,768
XCV100	10	40,960
XCV150	12	49,152
XCV200	14	57,344
XCV300	16	65,536
XCV400	20	81,920
XCV600	24	98,304
XCV800	28	114,688
XCV1000	32	131,072

In addition to the test instructions outlined above, the boundary-scan circuitry can be used to configure the FPGA, and also to read back the configuration data.

Figure 10 is a diagram of the Virtex Series boundary scan logic. It includes three bits of Data Register per IOB, the IEEE 1149.1 Test Access Port controller, and the Instruction Register with decodes.

Instruction Set

The Virtex Series boundary scan instruction set also includes instructions to configure the device and read back configuration data (CFG_IN, CFG_OUT, and JSTART). The complete instruction set is coded as shown in Table 5.

Data Registers

The primary data register is the boundary scan register. For each IOB pin in the FPGA, bonded or not, it includes three bits for In, Out, and 3-State Control. Non-IOB pins have appropriate partial bit population if input-only or output-only. Each EXTEST CAPTURED-OR state captures all In, Out, and 3-state pins.

The other standard data register is the single flip-flop BYPASS register. It synchronizes data being passed through the FPGA to the next downstream boundary scan device.

The FPGA supports up to two additional internal scan chains that can be specified using the BSCAN macro. The macro provides two user pins (SEL1 and SEL2) which are decodes of the USER1 and USER2 instructions respectively. For these instructions, two corresponding pins (TDO1 and TDO2) allow user scan data to be shifted out of TDO.

Likewise, there are individual clock pins (DRCK1 and DRCK2) for each user register. There is a common input pin (TDI) and shared output pins that represent the state of the TAP controller (RESET, SHIFT, and UPDATE).

Bit Sequence

The order within each IOB is: In, Out, 3-State. The input-only pins contribute only the In bit to the boundary scan I/O data register, while the output-only pins contributes all three bits.

From a cavity-up view of the chip (as shown in EPIC), starting in the upper right chip corner, the boundary scan data-register bits are ordered as shown in Figure 11.

BSDL (Boundary Scan Description Language) files for Virtex Series devices are available on the Xilinx web site in the File Download area.

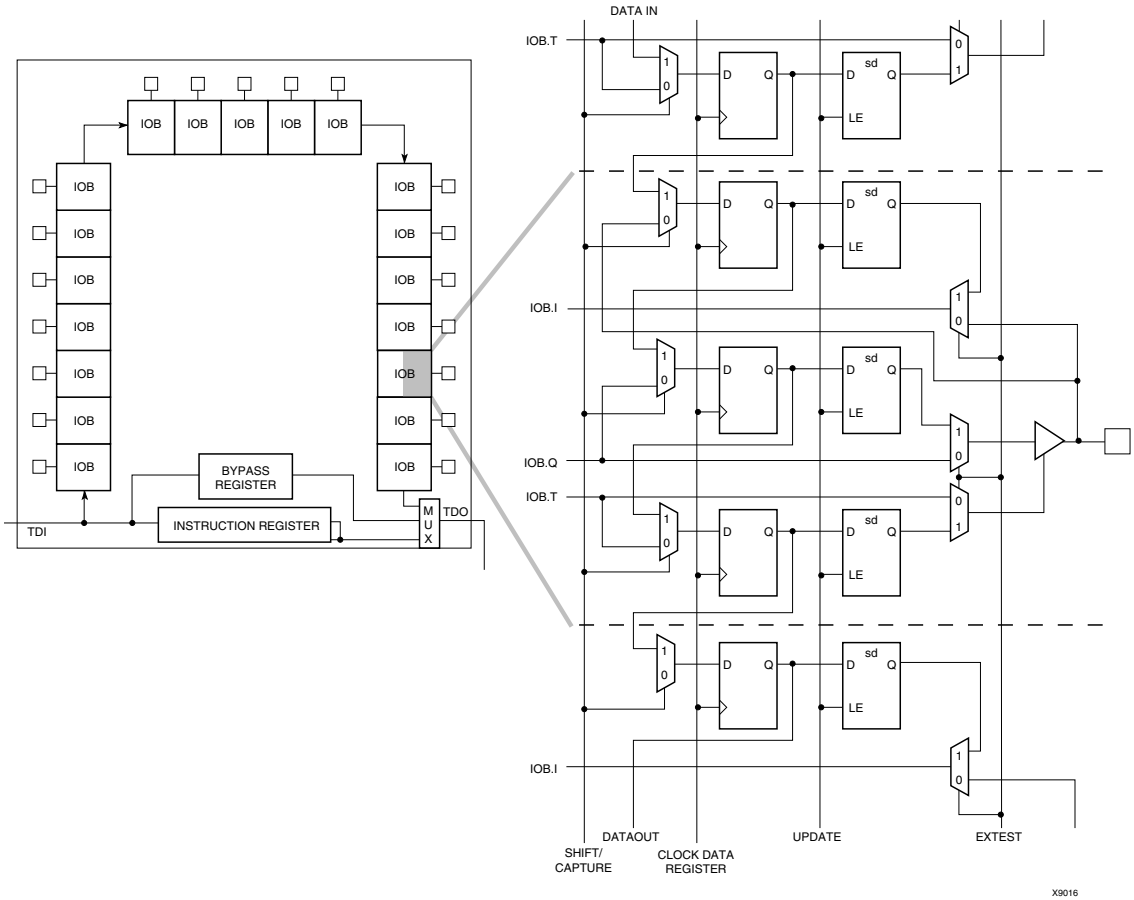

Figure 10: **Virtex Series Boundary Scan Logic**

ers with a common user interface regardless of their choice of entry and verification tools. The XDM software simplifies the selection of implementation options with pull-down menus and on-line help.

Application programs ranging from schematic capture to Placement and Routing (PAR) can be accessed through the XDM software. The program command sequence is generated prior to execution, and stored for documentation.

Several advanced software features facilitate Virtex design. RPMs, for example, are schematic-based macros with relative location constraints to guide their placement. They help ensure optimal implementation of common functions.

For HDL design entry, the Xilinx FPGA Foundation development system provides interfaces to the following synthesis design environments.

- Synopsys (FPGA Compiler, FPGA Express)
- Exemplar (Spectrum)
- Synplicity (Synplify)

For schematic design entry, the Xilinx FPGA Foundation and alliance development system provides interfaces to the following schematic-capture design environments.

- Mentor Graphics V8 (Design Architect, QuickSim II)
- Viewlogic Systems (Viewdraw)

Third-party vendors support many other environments.

A standard interface-file specification, Electronic Design Interchange Format (EDIF), simplifies file transfers into and out of the development system.

Virtex FPGAs supported by a unified library of standard functions. This library contains over 400 primitives and macros, ranging from 2-input AND gates to 16-bit accumulators, and includes arithmetic functions, comparators, counters, data registers, decoders, encoders, I/O functions, latches, Boolean functions, multiplexers, shift registers, and barrel shifters.

The “soft macro” portion of the library contains detailed descriptions of common logic functions, but does not contain any partitioning or placement information. The performance of these macros depends, therefore, on the partitioning and placement obtained during implementation.

RPMs, on the other hand, do contain predetermined partitioning and placement information that permits optimal implementation of these functions. Users can create their own library of soft macros or RPMs based on the macros and primitives in the standard library.

The design environment supports hierarchical design entry, with high-level schematics that comprise major functional blocks, while lower-level schematics define the logic in these blocks. These hierarchical design elements are automatically combined by the implementation tools. Different design entry tools can be combined within a hierarchical design, thus allowing the most convenient entry method to be used for each portion of the design.

Design Implementation

The place-and-route tools (PAR) automatically provide the implementation flow described in this section. The partitioner takes the EDIF net list for the design and maps the logic into the architectural resources of the FPGA (CLBs and IOBs, for example). The placer then determines the best locations for these blocks based on their interconnections and the desired performance. Finally, the router interconnects the blocks.

The PAR algorithms support fully automatic implementation of most designs. For demanding applications, however, the user can exercise various degrees of control over the process. User partitioning, placement, and routing information is optionally specified during the design-entry process. The implementation of highly structured designs can benefit greatly from basic floor planning.

The implementation software incorporates Timing Wizard® timing-driven placement and routing. Designers specify timing requirements along entire paths during design entry. The timing path analysis routines in PAR then recognize these user-specified requirements and accommodate them.

Timing requirements are entered on a schematic in a form directly relating to the system requirements, such as the targeted clock frequency, or the maximum allowable delay between two registers. In this way, the overall performance of the system along entire signal paths is automatically tailored to user-generated specifications. Specific timing information for individual nets is unnecessary.

Design Verification

In addition to conventional software simulation, FPGA users can use in-circuit debugging techniques. Because Xilinx devices are infinitely reprogrammable, designs can be verified in real time without the need for extensive sets of software simulation vectors.

The development system supports both software simulation and in-circuit debugging techniques. For simulation, the system extracts the post-layout timing information from the design database, and back-annotates this information into the net list for use by the simulator. Alternatively, the user can verify timing-critical portions of the design using the TRACE® static timing analyzer.

For in-circuit debugging, the development system includes a download and readback cable. This cable connects the FPGA in the target system to a PC or workstation. After downloading the design into the FPGA, the designer can single-step the logic, readback the contents of the flip-flops, and so observe the internal logic state. Simple modifications can be downloaded into the system in a matter of minutes.

Configuration

Virtex devices are configured by loading configuration data into the internal configuration memory. Some of the pins used for this are dedicated configuration pins, while others can be re-used as general purpose inputs and outputs once configuration is complete.

The following are dedicated pins:

- Mode pins (M2, M1, M0)
- Configuration clock pin (CCLK)
- $\overline{\text{PROGRAM}}$ pin
- DONE pin
- Boundary-scan pins (TDI, TDO, TMS, TCK)

Depending on the configuration mode chosen, CCLK can be an output generated by the FPGA, or it can be generated externally and provided to the FPGA as an input. The $\overline{\text{PROGRAM}}$ pin must be pulled High prior to reconfiguration.

Note that some configuration pins can act as outputs. For correct operation, these pins can require a V_{CCO} of 3.3 V to permit LVTTL operation. All the pins affected are in banks 2 or 3. The configuration pins needed for SelectMap (CS, Write) are located in bank 1.

After Virtex devices are configured, unused IOBs function as 3-state OBUFTs with weak pull downs. For a more detailed description than that given below, see the XAPP138, Virtex Configuration and Readback.

Configuration Modes

Virtex supports the following four configuration modes.

- Slave-serial mode
- Master-serial mode
- SelectMAP mode
- Boundary-scan mode

The Configuration mode pins (M2, M1, M0) select among these configuration modes with the option in each case of having the IOB pins either pulled up or left floating prior to configuration. The selection codes are listed in Table 7.

Configuration through the boundary-scan port is always available, independent of the mode selection. Selecting the boundary-scan mode simply turns off the other modes. The three mode pins have internal pull-up resistors, and default to a logic High if left unconnected. However, it is recommended to drive the configuration mode pins externally.

Table 7: **Configuration Codes**

Configuration Mode	M2	M1	M0	CCLK Direction	Data Width	Serial D_{out}	Configuration Pull-ups
Master-serial mode	0	0	0	Out	1	Yes	No
Boundary-scan mode	1	0	1	N/A	1	No	No
SelectMAP mode	1	1	0	In	8	No	No
Slave-serial mode	1	1	1	In	1	Yes	No
Master-serial mode	1	0	0	Out	1	Yes	Yes
Boundary-scan mode	0	0	1	N/A	1	No	Yes
SelectMAP mode	0	1	0	In	8	No	Yes
Slave-serial mode	0	1	1	In	1	Yes	Yes

Slave-Serial Mode

In slave-serial mode, the FPGA receives configuration data in bit-serial form from a serial PROM or other source of serial configuration data. The serial bitstream must be setup at the DIN input pin a short time before each rising edge of an externally generated CCLK.

For more information on serial PROMs, see the PROM data sheet at:
http://www.xilinx.com/bvdocs/publications/ds026.pdf.

Multiple FPGAs can be daisy-chained for configuration from a single source. After a particular FPGA has been configured, the data for the next device is routed to the DOUT pin. The data on the DOUT pin changes on the rising edge of CCLK.

The change of DOUT on the rising edge of CCLK differs from previous families, but does not cause a problem for mixed configuration chains. This change was made to improve serial configuration rates for Virtex-only chains.

Figure 12 shows a full master/slave system. A Virtex device in slave-serial mode should be connected as shown in the third device from the left.

Slave-serial mode is selected by applying <111> or <011> to the mode pins (M2, M1, M0). A weak pull-up on the mode pins makes slave-serial the default mode if the pins are left unconnected. However, it is recommended to drive the configuration mode pins externally. Figure 13 shows slave-serial mode programming switching characteristics.

Table 8 provides more detail about the characteristics shown in Figure 13. Configuration must be delayed until the $\overline{\text{INIT}}$ pins of all daisy-chained FPGAs are High.

Master-Serial Mode

In master-serial mode, the CCLK output of the FPGA drives a Xilinx Serial PROM that feeds bit-serial data to the DIN input. The FPGA accepts this data on each rising CCLK edge. After the FPGA has been loaded, the data for the next device in a daisy-chain is presented on the DOUT pin after the rising CCLK edge.

The interface is identical to slave-serial except that an internal oscillator is used to generate the configuration clock (CCLK). A wide range of frequencies can be selected for CCLK which always starts at a slow default frequency. Configuration bits then switch CCLK to a higher frequency for the remainder of the configuration. Switching to a lower frequency is prohibited.

The CCLK frequency is set using the ConfigRate option in the bitstream generation software. The maximum CCLK frequency that can be selected is 60 MHz. When selecting a CCLK frequency, ensure that the serial PROM and any daisy-chained FPGAs are fast enough to support the clock rate.

On power-up, the CCLK frequency is 2.5 MHz. This frequency is used until the ConfigRate bits have been loaded when the frequency changes to the selected ConfigRate. Unless a different frequency is specified in the design, the default ConfigRate is 4 MHz.

Figure 12 shows a full master/slave system. In this system, the left-most device operates in master-serial mode. The remaining devices operate in slave-serial mode. The SPROM $\overline{\text{RESET}}$ pin is driven by $\overline{\text{INIT}}$, and the $\overline{\text{CE}}$ input is driven by DONE. There is the potential for contention on the DONE pin, depending on the start-up sequence options chosen.

Figure 14 shows the timing of master-serial configuration. Master-serial mode is selected by a <000> or <100> on the mode pins (M2, M1, M0). Table 8 shows the timing information for Figure 14.

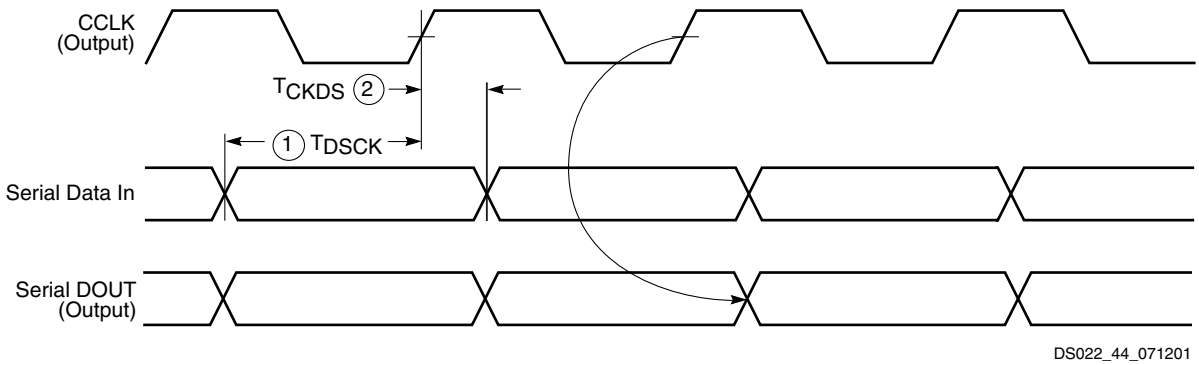

Figure 14: **Master-Serial Mode Programming Switching Characteristics**

At power-up, V_{CC} must rise from 1.0 V to V_{CC} min in less than 50 ms, otherwise delay configuration by pulling $\overline{\text{PROGRAM}}$ Low until V_{CC} is valid.

The sequence of operations necessary to configure a Virtex FPGA serially appears in Figure 15.

SelectMAP Mode

The SelectMAP mode is the fastest configuration option. Byte-wide data is written into the FPGA with a BUSY flag controlling the flow of data.

An external data source provides a byte stream, CCLK, a Chip Select ($\overline{\text{CS}}$) signal and a Write signal ($\overline{\text{WRITE}}$). If BUSY is asserted (High) by the FPGA, the data must be held until BUSY goes Low.

Data can also be read using the SelectMAP mode. If $\overline{\text{WRITE}}$ is not asserted, configuration data is read out of the FPGA as part of a readback operation.

In the SelectMAP mode, multiple Virtex devices can be chained in parallel. DATA pins (D7:D0), CCLK, $\overline{\text{WRITE}}$, $\overline{\text{BUSY}}$, $\overline{\text{PROGRAM}}$, DONE, and $\overline{\text{INIT}}$ can be connected in parallel between all the FPGAs. Note that the data is organized with the MSB of each byte on pin DO and the LSB of each byte on D7. The $\overline{\text{CS}}$ pins are kept separate, insuring that each FPGA can be selected individually. $\overline{\text{WRITE}}$ should be Low before loading the first bitstream and returned High after the last device has been programmed. Use $\overline{\text{CS}}$ to select the appropriate FPGA for loading the bitstream and sending the configuration data. at the end of the bitstream, deselect the loaded device and select the next target FPGA by setting its $\overline{\text{CS}}$ pin High. A free-running oscillator or other externally generated signal can be used for CCLK. The $\overline{\text{BUSY}}$ signal can be ignored for frequencies below 50 MHz. For details about frequencies above 50 MHz, see XAPP138, Virtex Configuration and Readback. Once all the devices have been programmed, the DONE pin goes High.

Virtex Electrical Characteristics

Definition of Terms

Electrical and switching characteristics are specified on a per-speed-grade basis and can be designated as Advance, Preliminary, or Production. Each designation is defined as follows:

Advance: These speed files are based on simulations only and are typically available soon after device design specifications are frozen. Although speed grades with this designation are considered relatively stable and conservative, some under-reporting might still occur.

Preliminary: These speed files are based on complete ES (engineering sample) silicon characterization. Devices and speed grades with this designation are intended to give a better indication of the expected performance of production silicon. The probability of under-reporting delays is greatly reduced as compared to Advance data.

Production: These speed files are released once enough production silicon of a particular device family member has been characterized to provide full correlation between speed files and devices over numerous production lots. There is no under-reporting of delays, and customers receive formal notification of any subsequent changes. Typically, the slowest speed grades transition to Production before faster speed grades.

All specifications are representative of worst-case supply voltage and junction temperature conditions. The parameters included are common to popular designs and typical applications. Contact the factory for design considerations requiring more detailed information.

Table 1 correlates the current status of each Virtex device with a corresponding speed file designation.

Table 1: **Virtex Device Speed Grade Designations**

Device	Speed Grade Designations		
	Advance	Preliminary	Production
XCV50			–6, –5, –4
XCV100			–6, –5, –4
XCV150			–6, –5, –4
XCV200			–6, –5, –4
XCV300			–6, –5, –4
XCV400			–6, –5, –4
XCV600			–6, –5, –4
XCV800			–6, –5, –4
XCV1000			–6, –5, –4

All specifications are subject to change without notice.

© 1999-2013 Xilinx, Inc. All rights reserved. All Xilinx trademarks, registered trademarks, patents, and disclaimers are as listed at http://www.xilinx.com/legal.htm.
All other trademarks and registered trademarks are the property of their respective owners. All specifications are subject to change without notice.

Virtex Switching Characteristics

All devices are 100% functionally tested. Internal timing parameters are derived from measuring internal test patterns. Listed below are representative values. For more specific, more precise, and worst-case guaranteed data, use the values reported by the static timing analyzer (TRCE in the Xilinx Development System) and back-annotated to the simulation net list. All timing parameters assume worst-case operating conditions (supply voltage and junction temperature). Values apply to all Virtex devices unless otherwise noted.

IOB Input Switching Characteristics

Input delays associated with the pad are specified for LVTTL levels. For other standards, adjust the delays with the values shown in , page 6.

Description	Device	Symbol	Speed Grade				Units
			Min	-6	-5	-4	
Propagation Delays							
Pad to I output, no delay	All	T_{IOPI}	0.39	0.8	0.9	1.0	ns, max
Pad to I output, with delay	XCV50	T_{IOPID}	0.8	1.5	1.7	1.9	ns, max
	XCV100		0.8	1.5	1.7	1.9	ns, max
	XCV150		0.8	1.5	1.7	1.9	ns, max
	XCV200		0.8	1.5	1.7	1.9	ns, max
	XCV300		0.8	1.5	1.7	1.9	ns, max
	XCV400		0.9	1.8	2.0	2.3	ns, max
	XCV600		0.9	1.8	2.0	2.3	ns, max
	XCV800		1.1	2.1	2.4	2.7	ns, max
	XCV1000		1.1	2.1	2.4	2.7	ns, max
Pad to output IQ via transparent latch, no delay	All	T_{IOPLI}	0.8	1.6	1.8	2.0	ns, max
Pad to output IQ via transparent latch, with delay	XCV50	T_{IOPLID}	1.9	3.7	4.2	4.8	ns, max
	XCV100		1.9	3.7	4.2	4.8	ns, max
	XCV150		2.0	3.9	4.3	4.9	ns, max
	XCV200		2.0	4.0	4.4	5.1	ns, max
	XCV300		2.0	4.0	4.4	5.1	ns, max
	XCV400		2.1	4.1	4.6	5.3	ns, max
	XCV600		2.1	4.2	4.7	5.4	ns, max
	XCV800		2.2	4.4	4.9	5.6	ns, max
	XCV1000		2.3	4.5	5.1	5.8	ns, max
Sequential Delays							
Clock CLK	All						
Minimum Pulse Width, High		T_{CH}	0.8	1.5	1.7	2.0	ns, min
Minimum Pulse Width, Low		T_{CL}	0.8	1.5	1.7	2.0	ns, min
Clock CLK to output IQ		T_{IOCKIQ}	0.2	0.7	0.7	0.8	ns, max

Description	Device	Symbol	Speed Grade				Units
			Min	-6	-5	-4	
Setup and Hold Times with respect to Clock CLK at IOB input register(1)			**Setup Time / Hold Time**				
Pad, no delay	All	T_{IOPICK}/T_{IOICKP}	0.8 / 0	1.6 / 0	1.8 / 0	2.0 / 0	ns, min
Pad, with delay	XCV50	$T_{IOPICKD}/T_{IOICKPD}$	1.9 / 0	3.7 / 0	4.1 / 0	4.7 / 0	ns, min
	XCV100		1.9 / 0	3.7 / 0	4.1 / 0	4.7 / 0	ns, min
	XCV150		1.9 / 0	3.8 / 0	4.3 / 0	4.9 / 0	ns, min
	XCV200		2.0 / 0	3.9 / 0	4.4 / 0	5.0 / 0	ns, min
	XCV300		2.0 / 0	3.9 / 0	4.4 / 0	5.0 / 0	ns, min
	XCV400		2.1 / 0	4.1 / 0	4.6 / 0	5.3 / 0	ns, min
	XCV600		2.1 / 0	4.2 / 0	4.7 / 0	5.4 / 0	ns, min
	XCV800		2.2 / 0	4.4 / 0	4.9 / 0	5.6 / 0	ns, min
	XCV1000		2.3 / 0	4.5 / 0	5.0 / 0	5.8 / 0	ns, min
ICE input	All	$T_{IOICECK}/T_{IOCKICE}$	0.37/ 0	0.8 / 0	0.9 / 0	1.0 / 0	ns, max
Set/Reset Delays							
SR input (IFF, synchronous)	All	$T_{IOSRCKI}$	0.49	1.0	1.1	1.3	ns, max
SR input to IQ (asynchronous)	All	T_{IOSRIQ}	0.70	1.4	1.6	1.8	ns, max
GSR to output IQ	All	T_{GSRQ}	4.9	9.7	10.9	12.5	ns, max

Notes:
1. A Zero "0" Hold Time listing indicates no hold time or a negative hold time. Negative values cannot be guaranteed "best-case", but if a "0" is listed, there is no positive hold time.
2. Input timing for LVTTL is measured at 1.4 V. For other I/O standards, see Table 3.

IOB Output Switching Characteristics Standard Adjustments

Output delays terminating at a pad are specified for LVTTL with 12 mA drive and fast slew rate. For other standards, adjust the delays by the values shown.

Description	Symbol	Standard(1)	Speed Grade				Units
			Min	-6	-5	-4	
Output Delay Adjustments							
Standard-specific adjustments for output delays terminating at pads (based on standard capacitive load, Csl)	T_{OLVTTL_S2}	LVTTL, Slow, 2 mA	4.2	14.7	15.8	17.0	ns
	T_{OLVTTL_S4}	4 mA	2.5	7.5	8.0	8.6	ns
	T_{OLVTTL_S6}	6 mA	1.8	4.8	5.1	5.6	ns
	T_{OLVTTL_S8}	8 mA	1.2	3.0	3.3	3.5	ns
	T_{OLVTTL_S12}	12 mA	1.0	1.9	2.1	2.2	ns
	T_{OLVTTL_S16}	16 mA	0.9	1.7	1.9	2.0	ns
	T_{OLVTTL_S24}	24 mA	0.8	1.3	1.4	1.6	ns
	T_{OLVTTL_F2}	LVTTL, Fast, 2mA	1.9	13.1	14.0	15.1	ns
	T_{OLVTTL_F4}	4 mA	0.7	5.3	5.7	6.1	ns
	T_{OLVTTL_F6}	6 mA	0.2	3.1	3.3	3.6	ns
	T_{OLVTTL_F8}	8 mA	0.1	1.0	1.1	1.2	ns
	T_{OLVTTL_F12}	12 mA	0	0	0	0	ns
	T_{OLVTTL_F16}	16 mA	–0.10	–0.05	–0.05	–0.05	ns
	T_{OLVTTL_F24}	24 mA	–0.10	–0.20	–0.21	–0.23	ns
	$T_{OLVCMOS2}$	LVCMOS2	0.10	0.10	0.11	0.12	ns
	T_{OPCI33_3}	PCI, 33 MHz, 3.3 V	0.50	2.3	2.5	2.7	ns
	T_{OPCI33_5}	PCI, 33 MHz, 5.0 V	0.40	2.8	3.0	3.3	ns
	T_{OPCI66_3}	PCI, 66 MHz, 3.3 V	0.10	–0.40	–0.42	–0.46	ns
	T_{OGTL}	GTL	0.6	0.50	0.54	0.6	ns
	T_{OGTLP}	GTL+	0.7	0.8	0.9	1.0	ns
	T_{OHSTL_I}	HSTL I	0.10	–0.50	–0.53	–0.5	ns
	T_{OHSTL_III}	HSTL III	–0.10	–0.9	–0.9	–1.0	ns
	T_{OHSTL_IV}	HSTL IV	–0.20	–1.0	–1.0	–1.1	ns
	T_{OSSTL2_I}	SSTL2 I	–0.10	–0.50	–0.53	–0.5	ns
	T_{OSSLT2_II}	SSTL2 II	–0.20	–0.9	–0.9	–1.0	ns
	T_{OSSTL3_I}	SSTL3 I	–0.20	–0.50	–0.53	–0.5	ns
	T_{OSSTL3_II}	SSTL3 II	–0.30	–1.0	–1.0	–1.1	ns
	T_{OCTT}	CTT	0	–0.6	–0.6	–0.6	ns
	T_{OAGP}	AGP	0	–0.9	–0.9	–1.0	ns

Notes:
1. Output timing is measured at 1.4 V with 35 pF external capacitive load for LVTTL. For other I/O standards and different loads, see Table 2 and Table 3.

CLB Arithmetic Switching Characteristics

Setup times not listed explicitly can be approximated by decreasing the combinatorial delays by the setup time adjustment listed. Precise values are provided by the timing analyzer.

Description	Symbol	Speed Grade				Units
		Min	-6	-5	-4	
Combinatorial Delays						
F operand inputs to X via XOR	T_{OPX}	0.37	0.8	0.9	1.0	ns, max
F operand input to XB output	T_{OPXB}	0.54	1.1	1.3	1.4	ns, max
F operand input to Y via XOR	T_{OPY}	0.8	1.5	1.7	2.0	ns, max
F operand input to YB output	T_{OPYB}	0.8	1.5	1.7	2.0	ns, max
F operand input to COUT output	T_{OPCYF}	0.6	1.2	1.3	1.5	ns, max
G operand inputs to Y via XOR	T_{OPGY}	0.46	1.0	1.1	1.2	ns, max
G operand input to YB output	T_{OPGYB}	0.8	1.6	1.8	2.1	ns, max
G operand input to COUT output	T_{OPCYG}	0.7	1.3	1.4	1.6	ns, max
BX initialization input to COUT	T_{BXCY}	0.41	0.9	1.0	1.1	ns, max
CIN input to X output via XOR	T_{CINX}	0.21	0.41	0.46	0.53	ns, max
CIN input to XB	T_{CINXB}	0.02	0.04	0.05	0.06	ns, max
CIN input to Y via XOR	T_{CINY}	0.23	0.46	0.52	0.6	ns, max
CIN input to YB	T_{CINYB}	0.23	0.45	0.51	0.6	ns, max
CIN input to COUT output	T_{BYP}	0.05	0.09	0.10	0.11	ns, max
Multiplier Operation						
F1/2 operand inputs to XB output via AND	T_{FANDXB}	0.18	0.36	0.40	0.46	ns, max
F1/2 operand inputs to YB output via AND	T_{FANDYB}	0.40	0.8	0.9	1.1	ns, max
F1/2 operand inputs to COUT output via AND	T_{FANDCY}	0.22	0.43	0.48	0.6	ns, max
G1/2 operand inputs to YB output via AND	T_{GANDYB}	0.25	0.50	0.6	0.7	ns, max
G1/2 operand inputs to COUT output via AND	T_{GANDCY}	0.07	0.13	0.15	0.17	ns, max
Setup and Hold Times before/after Clock CLK(1)	Setup Time / Hold Time					
CIN input to FFX	T_{CCKX}/T_{CKCX}	0.50 / 0	1.0 / 0	1.2 / 0	1.3 / 0	ns, min
CIN input to FFY	T_{CCKY}/T_{CKCY}	0.53 / 0	1.1 / 0	1.2 / 0	1.4 / 0	ns, min

Notes:
1. A Zero "0" Hold Time listing indicates no hold time or a negative hold time. Negative values can not be guaranteed "best-case", but if a "0" is listed, there is no positive hold time.

DLL Timing Parameters

All devices are 100 percent functionally tested. Because of the difficulty in directly measuring many internal timing parameters, those parameters are derived from benchmark timing patterns. The following guidelines reflect worst-case values across the recommended operating conditions.

Description	Symbol	Speed Grade						Units
		-6		-5		-4		
		Min	Max	Min	Max	Min	Max	
Input Clock Frequency (CLKDLLHF)	FCLKINHF	60	200	60	180	60	180	MHz
Input Clock Frequency (CLKDLL)	FCLKINLF	25	100	25	90	25	90	MHz
Input Clock Pulse Width (CLKDLLHF)	$T_{DLLPWHF}$	2.0	-	2.4	-	2.4	-	ns
Input Clock Pulse Width (CLKDLL)	$T_{DLLPWLF}$	2.5	-	3.0		3.0	-	ns

Notes:
1. All specifications correspond to Commercial Operating Temperatures (0°C to + 85°C).

DLL Clock Tolerance, Jitter, and Phase Information

All DLL output jitter and phase specifications determined through statistical measurement at the package pins using a clock mirror configuration and matched drivers.

Description	Symbol	F_{CLKIN}	CLKDLLHF		CLKDLL		Units
			Min	Max	Min	Max	
Input Clock Period Tolerance	T_{IPTOL}		-	1.0	-	1.0	ns
Input Clock Jitter Tolerance (Cycle to Cycle)	T_{IJITCC}		-	± 150	-	± 300	ps
Time Required for DLL to Acquire Lock	T_{LOCK}	> 60 MHz	-	20	-	20	µs
		50 - 60 MHz	-	-	-	25	µs
		40 - 50 MHz	-	-	-	50	µs
		30 - 40 MHz	-	-	-	90	µs
		25 - 30 MHz	-	-	-	120	µs
Output Jitter (cycle-to-cycle) for any DLL Clock Output(1)	T_{OJITCC}			± 60		± 60	ps
Phase Offset between CLKIN and CLKO(2)	T_{PHIO}			± 100		± 100	ps
Phase Offset between Clock Outputs on the DLL(3)	T_{PHOO}			± 140		± 140	ps
Maximum Phase Difference between CLKIN and CLKO(4)	T_{PHIOM}			± 160		± 160	ps
Maximum Phase Difference between Clock Outputs on the DLL(5)	T_{PHOOM}			± 200		± 200	ps

Notes:
1. **Output Jitter** is cycle-to-cycle jitter measured on the DLL output clock, *excluding* input clock jitter.
2. **Phase Offset between CLKIN and CLKO** is the worst-case fixed time difference between rising edges of CLKIN and CLKO, *excluding* Output Jitter and input clock jitter.
3. **Phase Offset between Clock Outputs on the DLL** is the worst-case fixed time difference between rising edges of any two DLL outputs, *excluding* Output Jitter and input clock jitter.
4. **Maximum Phase Difference between CLKIN an CLKO** is the sum of Output Jitter and Phase Offset between CLKIN and CLKO, or the greatest difference between CLKIN and CLKO rising edges due to DLL alone (*excluding* input clock jitter).
5. **Maximum Phase DIfference between Clock Outputs on the DLL** is the sum of Output JItter and Phase Offset between any DLL clock outputs, or the greatest difference between any two DLL output rising edges sue to DLL alone (*excluding* input clock jitter).
6. All specifications correspond to Commercial Operating Temperatures (0°C to +85°C).

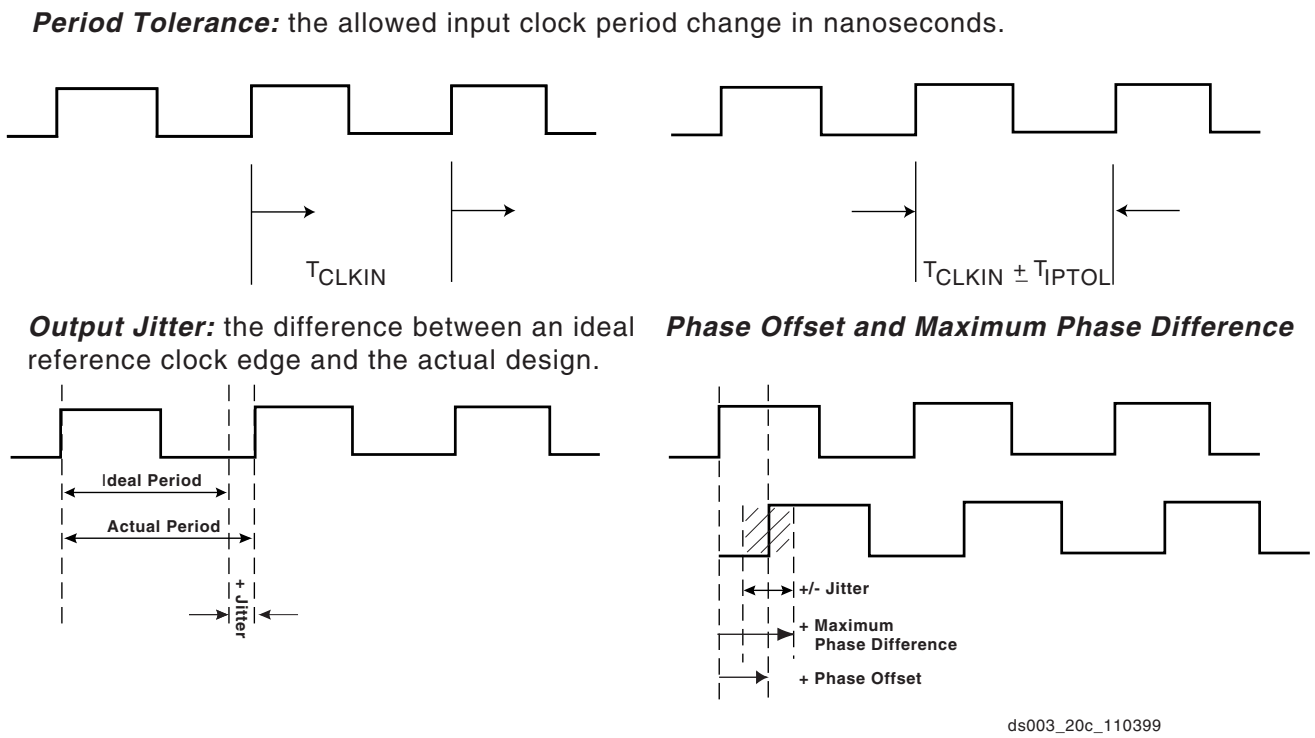

Figure 1: **Frequency Tolerance and Clock Jitter**

Revision History

Date	Version	Revision
11/98	1.0	Initial Xilinx release.
01/99	1.2	Updated package drawings and specs.
02/99	1.3	Update of package drawings, updated specifications.
05/99	1.4	Addition of package drawings and specifications.
05/99	1.5	Replaced FG 676 & FG680 package drawings.
07/99	1.6	Changed Boundary Scan Information and changed Figure 11, Boundary Scan Bit Sequence. Updated IOB Input & Output delays. Added Capacitance info for different I/O Standards. Added 5 V tolerant information. Added DLL Parameters and waveforms and new Pin-to-pin Input and Output Parameter tables for Global Clock Input to Output and Setup and Hold. Changed Configuration Information including Figures 12, 14, 17 & 19. Added device-dependent listings for quiescent currents ICCINTQ and ICCOQ. Updated IOB Input and Output Delays based on default standard of LVTTL, 12 mA, Fast Slew Rate. Added IOB Input Switching Characteristics Standard Adjustments.
09/99	1.7	Speed grade update to preliminary status, Power-on specification and Clock-to-Out Minimums additions, "0" hold time listing explanation, quiescent current listing update, and Figure 6 ADDRA input label correction. Added T_{IJITCC} parameter, changed T_{OJIT} to T_{OPHASE}.
01/00	1.8	Update to speed.txt file 1.96. Corrections for CRs 111036,111137, 112697, 115479, 117153, 117154, and 117612. Modified notes for Recommended Operating Conditions (voltage and temperature). Changed Bank information for V_{CCO} in CS144 package on p.43.

Table 3: **Virtex Pinout Tables (BGA)** ***(Continued)***

Pin Name	Device	BG256	BG352	BG432	BG560
V_{CCINT} **Notes:** • Superset includes all pins, including the ones in **bold** type. Subset excludes pins in **bold** type. • In BG352, for XCV300 all the V_{CCINT} pins in the superset must be connected. For XCV150/200, V_{CCINT} pins in the subset must be connected, and pins in **bold** type can be left unconnected (these unconnected pins cannot be used as user I/O.) • In BG432, for XCV400/600/800 all V_{CCINT} pins in the superset must be connected. For XCV300, V_{CCINT} pins in the subset must be connected, and pins in **bold** type can be left unconnected (these unconnected pins cannot be used as user I/O.) • In BG560, for XCV800/1000 all V_{CCINT} pins in the superset must be connected. For XCV400/600, V_{CCINT} pins in the subset must be connected, and pins in **bold** type can be left unconnected (these unconnected pins cannot be used as user I/O.)	XCV50/100	C10, D6, D15, F4, F17, L3, L18, R4, R17, U6, U15, V10	N/A	N/A	N/A
	XCV150/200/300	Same as above	A20, C14, D10, J24, K4, P2, P25, V24, W2, AC10, AE14, AE19, **B16, D12, L1, L25, R23, T1, AF11, AF16**	A10, A17, B23, C14, C19, K3, K29, N2, N29, T1, T29, W2, W31, AB2, AB30, AJ10, AJ16, AK13, AK19, AK22, **B26, C7, F1, F30, AE29, AF1, AH8, AH24**	N/A
	XCV400/600/800/1000	N/A	N/A	Same as above	A21, B14, B18, B28, C24, E9, E12, F2, H30, J1, K32, N1, N33, U5, U30, Y2, Y31, AD2, AD32, AG3, AG31, AK8, AK11, AK17, AK20, AL14, AL27, AN25, **B12, C22, M3, N29, AB2, AB32, AJ13, AL22**
V_{CCO}, Bank 0	All	D7, D8	A17, B25, D19	A21, C29, D21	A22, A26, A30, B19, B32
V_{CCO}, Bank 1	All	D13, D14	A10, D7, D13	A1, A11, D11	A10, A16, B13, C3, E5
V_{CCO}, Bank 2	All	G17, H17	B2, H4, K1	C3, L1, L4	B2, D1, H1, M1, R2
V_{CCO}, Bank 3	All	N17, P17	P4, U1, Y4	AA1, AA4, AJ3	V1, AA2, AD1, AK1, AL2
V_{CCO}, Bank 4	All	U13, U14	AC8, AE2, AF10	AH11, AL1, AL11	AM2, AM15, AN4, AN8, AN12
V_{CCO}, Bank 5	All	U7, U8	AC14, AC20, AF17	AH21, AJ29, AL21	AL31, AM21, AN18, AN24, AN30
V_{CCO}, Bank 6	All	N4, P4	U26, W23, AE25	AA28, AA31, AL31	W32, AB33, AF33, AK33, AM32

Table 3: **Virtex Pinout Tables (BGA) *(Continued)***

Pin Name	Device	BG256	BG352	BG432	BG560
V_{CCO}, Bank 7	All	G4, H4	G23, K26, N23	A31, L28, L31	C32, D33, K33, N32, T33
V_{REF}, Bank 0 (VREF pins are listed incrementally. Connect all pins listed for both the required device and all smaller devices listed in the same package.) Within each bank, if input reference voltage is not required, all V_{REF} pins are general I/O.	XCV50	A8, B4	N/A	N/A	N/A
	XCV100/150	... + A4	A16,C19, C21	N/A	N/A
	XCV200/300	... + A2	... + D21	B19, D22, D24, D26	N/A
	XCV400	N/A	N/A	... + C18	A19, D20, D26, E23, E27
	XCV600	N/A	N/A	... + C24	... + E24
	XCV800	N/A	N/A	... + B21	... + E21
	XCV1000	N/A	N/A	N/A	... + D29
V_{REF}, Bank 1 (VREF pins are listed incrementally. Connect all pins listed for both the required device and all smaller devices listed in the same package.) Within each bank, if input reference voltage is not required, all V_{REF} pins are general I/O.	XCV50	A17, B12	N/A	N/A	N/A
	XCV100/150	... + B15	B6, C9, C12	N/A	N/A
	XCV200/300	... + B17	... + D6	A13, B7, C6, C10	N/A
	XCV400	N/A	N/A	... + B15	A6, D7, D11, D16, E15
	XCV600	N/A	N/A	... + D10	... + D10
	XCV800	N/A	N/A	... + B12	... + D13
	XCV1000	N/A	N/A	N/A	... + E7
V_{REF}, Bank 2 (V_{REF} pins are listed incrementally. Connect all pins listed for both the required device and all smaller devices listed in the same package.) Within each bank, if input reference voltage is not required, all V_{REF} pins are general I/O.	XCV50	C20, J18	N/A	N/A	N/A
	XCV100/150	... + F19	E2, H2, M4	N/A	N/A
	XCV200/300	... + G18	... + D2	E2, G3, J2, N1	N/A
	XCV400	N/A	N/A	... + R3	G5, H4, L5, P4, R1
	XCV600	N/A	N/A	... + H1	... + K5
	XCV800	N/A	N/A	... + M3	... + N5
	XCV1000	N/A	N/A	N/A	... + B3

Table 4: **Virtex Pinout Tables (Fine-Pitch BGA)** ***(Continued)***

Pin Name	Device	FG256	FG456	FG676	FG680
V_{REF}, Bank 4 (V_{REF} pins are listed incrementally. Connect all pins listed for both the required device and all smaller devices listed in the same package.) Within each bank, if input reference voltage is not required, all V_{REF} pins are general I/O.	XCV50	P9, T12	N/A	N/A	N/A
	XCV100/150	... + T11	AA13, AB16, AB19	N/A	N/A
	XCV200/300	... + R13	... + AB20	N/A	N/A
	XCV400	N/A	N/A	AC15, AD18, AD21, AD22, AF15	N/A
	XCV600	N/A	N/A	... + AF20	AT19, AU7, AU17, AV8, AV10, AW11
	XCV800	N/A	N/A	... + AF17	... + AV14
	XCV1000	N/A	N/A	N/A	... + AU6
V_{REF}, Bank 5 (V_{REF} pins are listed incrementally. Connect all pins listed for both the required device and all smaller devices listed in the same package.) Within each bank, if input reference voltage is not required, all V_{REF} pins are general I/O.	XCV50	T4, P8	N/A	N/A	N/A
	XCV100/150	... + R5	W8, Y10, AA5	N/A	N/A
	XCV200/300	... + T2	... + Y6	N/A	N/A
	XCV400	N/A	N/A	AA10, AB8, AB12, AC7, AF12	N/A
	XCV600	N/A	N/A	... + AF8	AT27, AU29, AU31, AV35, AW21, AW23
	XCV800	N/A	N/A	... + AE10	... + AT25
	XCV1000	N/A	N/A	N/A	... + AV36
V_{REF}, Bank 6 (V_{REF} pins are listed incrementally. Connect all pins listed for both the required device and all smaller devices listed in the same package.) Within each bank, if input reference voltage is not required, all V_{REF} pins are general I/O.	XCV50	J3, N1	N/A	N/A	N/A
	XCV100/150	... + M1	N2, R4, T3	N/A	N/A
	XCV200/300	... + N2	... + Y1	N/A	N/A
	XCV400	N/A	N/A	AB3, R1, R4, U6, V5	N/A
	XCV600	N/A	N/A	... + Y1	AB35, AD37, AH39, AK39, AM39, AN36
	XCV800	N/A	N/A	... + U2	... + AE39
	XCV1000	N/A	N/A	N/A	... + AT39

Table 4: **Virtex Pinout Tables (Fine-Pitch BGA)** ***(Continued)***

Pin Name	Device	FG256	FG456	FG676	FG680
V_{REF}, Bank 7	XCV50	C1, H3	N/A	N/A	N/A
(V_{REF} pins are listed incrementally. Connect all pins listed for both the required device and all smaller devices listed in the same package.)	XCV100/150	... + D1	E2, H4, K3	N/A	N/A
	XCV200/300	... + B1	... + D2	N/A	N/A
	XCV400	N/A	N/A	F4, G4, K6, M2, M5	N/A
	XCV600	N/A	N/A	... + H1	E38, G38, L36, N36, U36, U38
Within each bank, if input reference voltage is not required, all V_{REF} pins are general I/O.	XCV800	N/A	N/A	... + K1	... + N38
	XCV1000	N/A	N/A	N/A	... + F36
GND	All	A1, A16, B2, B15, F6, F7, F10, F11, G6, G7, G8, G9, G10, G11, H7, H8, H9, H10, J7, J8, J9, J10, K6, K7, K8, K9, K10, K11, L6, L7, L10, L11, R2, R15, T1, T16	A1, A22, B2, B21, C3, C20, J9, J10, J11, J12, J13, J14, K9, K10, K11, K12, K13, K14, L9, L10, L11, L12, L13, L14, M9, M10, M11, M12, M13, M14, N9, N10, N11, N12, N13, N14, P9, P10, P11, P12, P13, P14, Y3, Y20, AA2, AA21, AB1, AB22	A1, A26, B2, B9, B14, B18, B25, C3, C24, D4, D23, E5, E22, J2, J25, K10, K11, K12, K13, K14, K15, K16, K17, L10, L11, L12, L13, L14, L15, L16, L17, M10, M11, M12, M13, M14, M15, M16, M17, N2, N10, N11, N12, N13, N14, N15, N16, N17, P10, P11, P12, P13, P14, P15, P16, P17, P25, R10, R11, R12, R13, R14, R15, R16, R17, T10, T11, T12, T13, T14, T15, T16, T17, U10, U11, U12, U13, U14, U15, U16, U17, V2, V25, AB5, AB22, AC4, AC23, AD3, AD24, AE2, AE9, AE13, AE18, AE25, AF1, AF26	A1, A2, A3, A37, A38, A39, AA5, AA35, AH4, AH5, AH35, AH36, AR5, AR12, AR19, AR20, AR21, AR28, AR35, AT4, AT12, AT20, AT28, AT36, AU1, AU3, AU20, AU37, AU39, AV1, AV2, AV38, AV39, AW1, AW2, AW3, AW37, AW38, AW39, B1, B2, B38, B39, C1, C3, C20, C37, C39, D4, D12, D20, D28, D36, E5, E12, E19, E20, E21, E28, E35, M4, M5, M35, M36, W5, W35, Y3, Y4, Y5, Y35, Y36, Y37

BG352 Pin Function Diagram

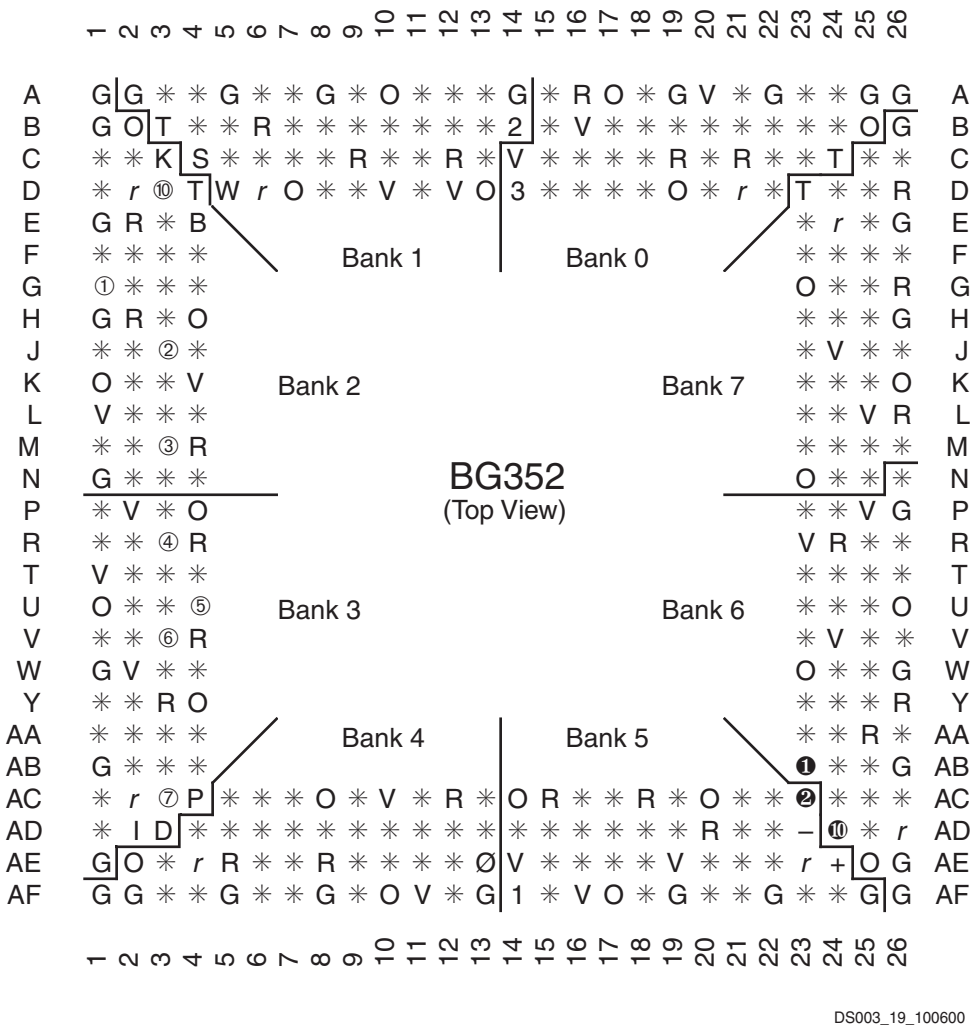

Figure 5: **BG352 Pin Function Diagram**

FG676 Pin Function Diagram

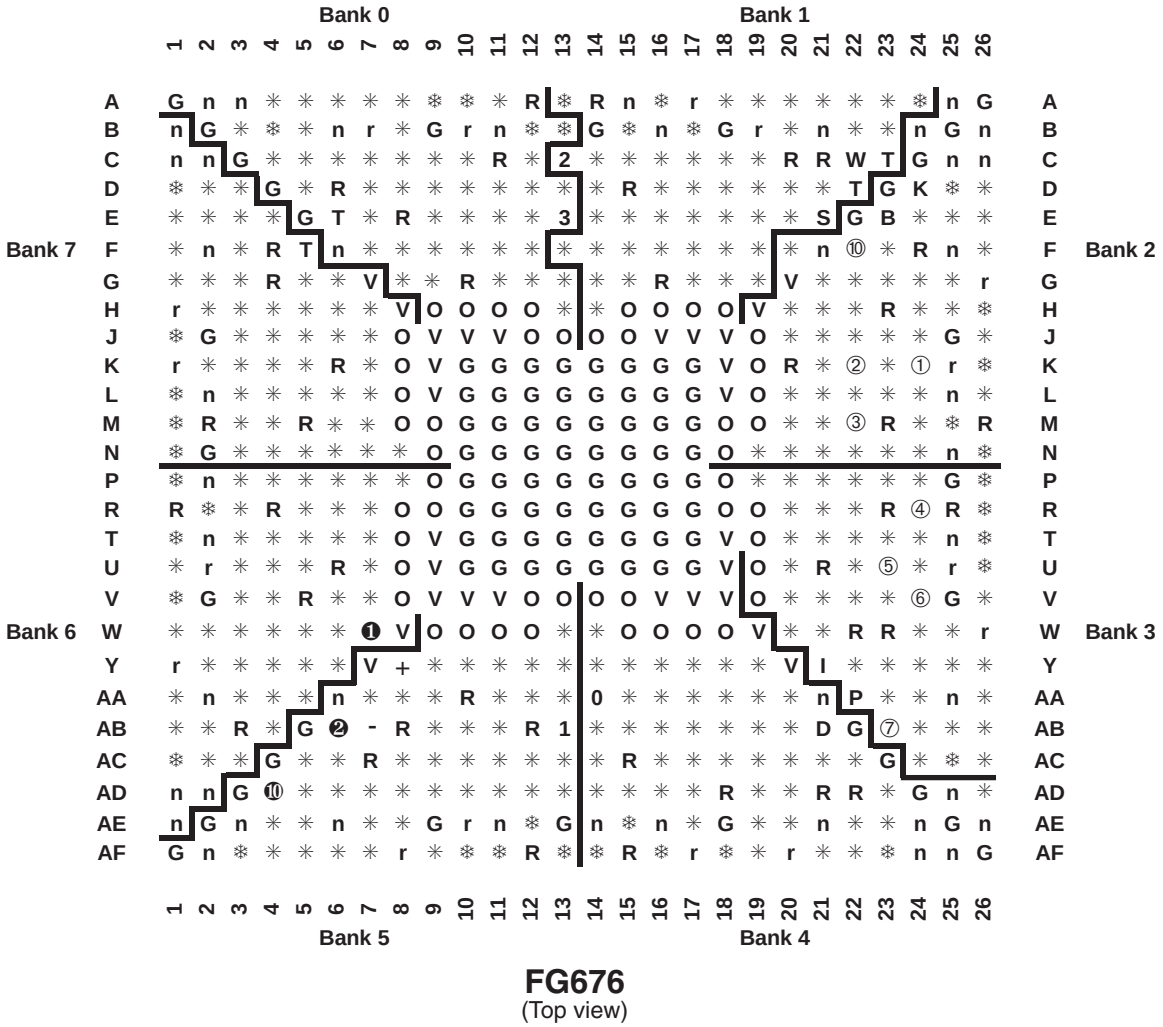

Figure 10: **FG676 Pin Function Diagram**

Notes:

Packages FG456 and FG676 are layout compatible.

FG680 Pin Function Diagram

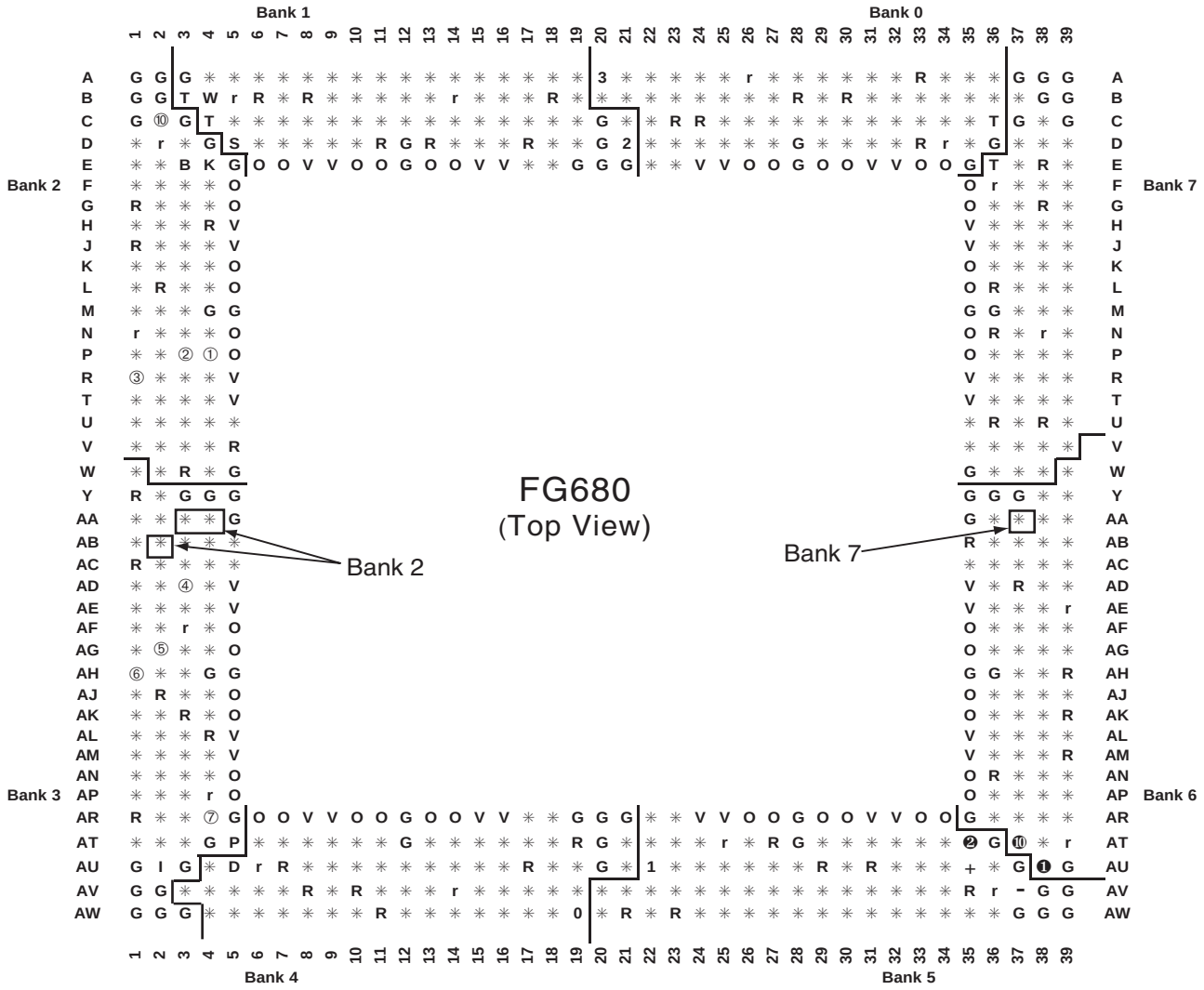

Note: AA3, AA4, and AB2 are in Bank 2

Note: AA37 is in Bank 7

Figure 11: **FG680 Pin Function Diagram**