Welcome to E-XFL.COM

What is "Embedded - Microcontrollers"?

"Embedded - Microcontrollers" refer to small, integrated circuits designed to perform specific tasks within larger systems. These microcontrollers are essentially compact computers on a single chip, containing a processor core, memory, and programmable input/output peripherals. They are called "embedded" because they are embedded within electronic devices to control various functions, rather than serving as standalone computers. Microcontrollers are crucial in modern electronics, providing the intelligence and control needed for a wide range of applications.

Applications of "Embedded - Microcontrollers"

Details	
Product Status	Active
Core Processor	ARM® Cortex®-M3
Core Size	32-Bit Single-Core
Speed	24MHz
Connectivity	I²C, IrDA, LINbus, SPI, UART/USART
Peripherals	DMA, PDR, POR, PVD, PWM, Temp Sensor, WDT
Number of I/O	51
Program Memory Size	512KB (512K x 8)
Program Memory Type	FLASH
EEPROM Size	-
RAM Size	32K x 8
Voltage - Supply (Vcc/Vdd)	2V ~ 3.6V
Data Converters	A/D 16x12b; D/A 2x12b
Oscillator Type	Internal
Operating Temperature	-40°C ~ 105°C (TA)
Mounting Type	Surface Mount
Package / Case	64-LQFP
Supplier Device Package	64-LQFP (10x10)
Purchase URL	https://www.e-xfl.com/product-detail/stmicroelectronics/stm32f100ret7btr

6.3 LQFP100 package information 94
6.4 LQFP64 package information 97
6.5 Thermal characteristics 100
6.5.1 Reference document 100
6.5.2 Selecting the product temperature range 101

7 Ordering information scheme 103

8 Revision history 104

2 Description

The STM32F100xx value line family incorporates the high-performance ARM® Cortex®-M3 32-bit RISC core operating at a 24 MHz frequency, high-speed embedded memories (Flash memory up to 512 Kbytes and SRAM up to 32 Kbytes), a flexible static memory control (FSMC) interface (for devices offered in packages of 100 pins and more) and an extensive range of enhanced peripherals and I/Os connected to two APB buses. All devices offer standard communication interfaces (up to two I^2Cs, three SPIs, one HDMI CEC, up to three USARTs and 2 UARTS), one 12-bit ADC, two 12-bit DACs, up to 9 general-purpose 16-bit timers and an advanced-control PWM timer.

The STM32F100xx high-density value line family operates in the –40 to +85 °C and –40 to +105 °C temperature ranges, from a 2.0 to 3.6 V power supply. A comprehensive set of power-saving mode allows the design of low-power applications.

The STM32F100xx value line family includes devices in three different packages ranging from 64 pins to 144 pins. Depending on the device chosen, different sets of peripherals are included, the description below gives an overview of the complete range of peripherals proposed in this family.

These features make the STM32F100xx value line microcontroller family suitable for a wide range of applications such as motor drives, application control, medical and handheld equipment, PC and gaming peripherals, GPS platforms, industrial applications, PLCs, inverters, printers, scanners, alarm systems, video intercoms, and HVACs.

Figure 1. STM32F100xx value line block diagram

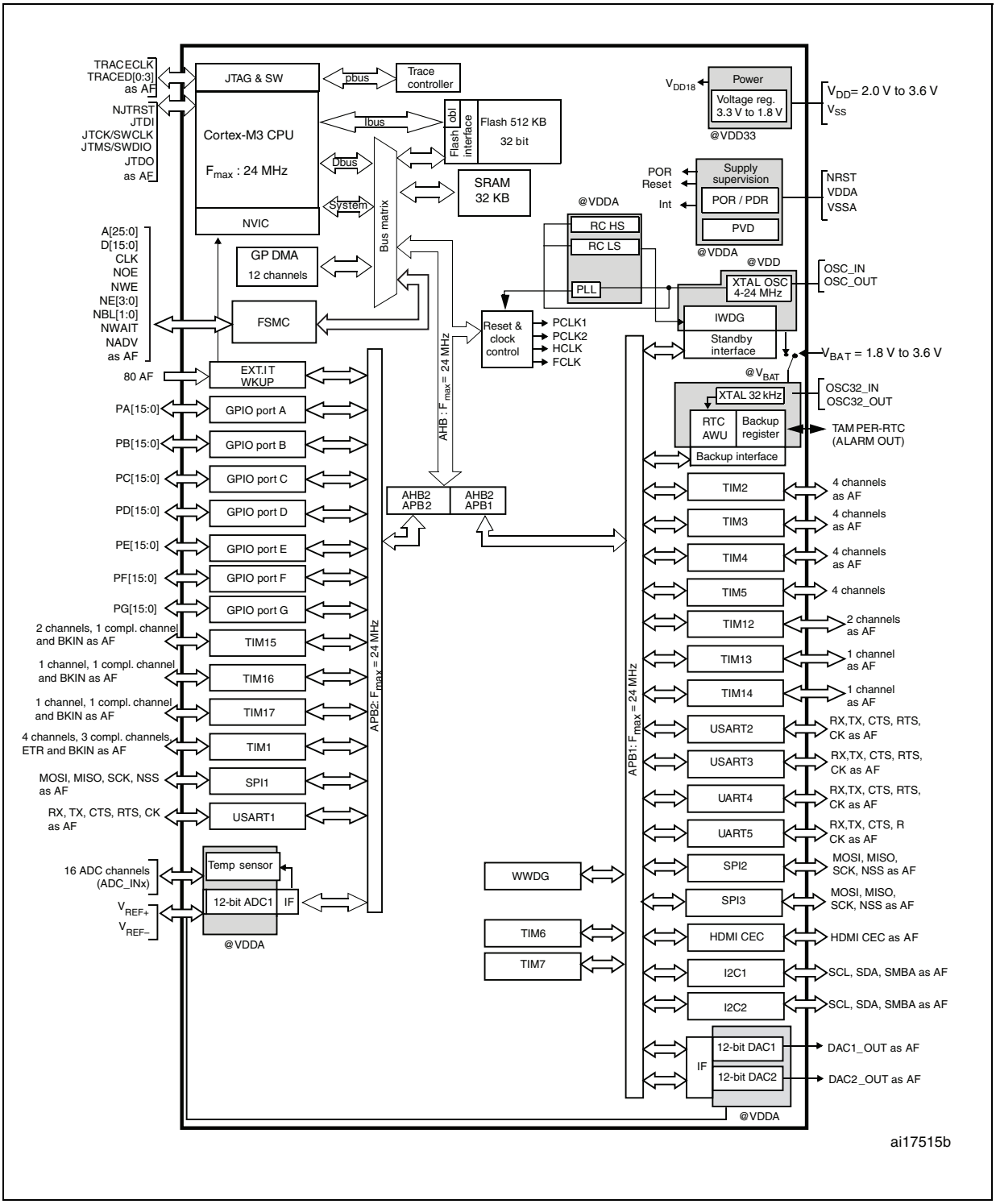

1. AF = alternate function on I/O port pin.
2. T_A = –40 °C to +85 °C (junction temperature up to 105 °C) or T_A = –40 °C to +105 °C (junction temperature up to 125 °C).

specific LCD interfaces. This LCD parallel interface capability makes it easy to build cost-effective graphic applications using LCD modules with embedded controllers or high-performance solutions using external controllers with dedicated acceleration.

2.2.7 Nested vectored interrupt controller (NVIC)

The STM32F100xx value line embeds a nested vectored interrupt controller able to handle up to 60 maskable interrupt channels (not including the 16 interrupt lines of Cortex®-M3) and 16 priority levels.

- Closely coupled NVIC gives low latency interrupt processing
- Interrupt entry vector table address passed directly to the core
- Closely coupled NVIC core interface
- Allows early processing of interrupts
- Processing of *late arriving* higher priority interrupts
- Support for tail-chaining
- Processor state automatically saved
- Interrupt entry restored on interrupt exit with no instruction overhead

This hardware block provides flexible interrupt management features with minimal interrupt latency.

2.2.8 External interrupt/event controller (EXTI)

The external interrupt/event controller consists of 18 edge detector lines used to generate interrupt/event requests. Each line can be independently configured to select the trigger event (rising edge, falling edge, both) and can be masked independently. A pending register maintains the status of the interrupt requests. The EXTI can detect an external line with a pulse width shorter than the Internal APB2 clock period. Up to 112 GPIOs can be connected to the 16 external interrupt lines.

2.2.9 Clocks and startup

System clock selection is performed on startup, however the internal RC 8 MHz oscillator is selected as default CPU clock on reset. An external 4-24 MHz clock can be selected, in which case it is monitored for failure. If failure is detected, the system automatically switches back to the internal RC oscillator. A software interrupt is generated if enabled. Similarly, full interrupt management of the PLL clock entry is available when necessary (for example on failure of an indirectly used external crystal, resonator or oscillator).

Several prescalers allow the configuration of the AHB frequency, the high-speed APB (APB2) and the low-speed APB (APB1) domains. The maximum frequency of the AHB and the APB domains is 24 MHz.

2.2.10 Boot modes

At startup, boot pins are used to select one of three boot options:

- Boot from user Flash
- Boot from system memory
- Boot from embedded SRAM

Table 3. Timer feature comparison

Timer	Counter resolution	Counter type	Prescaler factor	DMA request generation	Capture/compare channels	Complementary outputs
TIM1	16-bit	Up, down, up/down	16 bits	Yes	4	Yes
TIM2, TIM3, TIM4, TIM5	16-bit	Up, down, up/down	Any integer between 1 and 65536	Yes	4	No
TIM12	16-bit	Up	Any integer between 1 and 65536	No	2	No
TIM13, TIM14	16-bit	Up	Any integer between 1 and 65536	No	1	No
TIM15	16-bit	Up	Any integer between 1 and 65536	Yes	2	Yes
TIM16, TIM17	16-bit	Up	Any integer between 1 and 65536	Yes	1	Yes
TIM6, TIM7	16-bit	Up	Any integer between 1 and 65536	Yes	0	No

Advanced-control timer (TIM1)

The advanced-control timer (TIM1) can be seen as a three-phase PWM multiplexed on 6 channels. It has complementary PWM outputs with programmable inserted dead times. It can also be seen as a complete general-purpose timer. The 4 independent channels can be used for:

- Input capture
- Output compare
- PWM generation (edge or center-aligned modes)
- One-pulse mode output

If configured as a standard 16-bit timer, it has the same features as the TIMx timer. If configured as the 16-bit PWM generator, it has full modulation capability (0-100%).

The counter can be frozen in debug mode.

Many features are shared with those of the standard TIM timers which have the same architecture. The advanced control timer can therefore work together with the TIM timers via the Timer Link feature for synchronization or event chaining.

General-purpose timers (TIM2..5, TIM12..17)

There are ten synchronizable general-purpose timers embedded in the STM32F100xx devices (see *Table 3* for differences). Each general-purpose timer can be used to generate PWM outputs, or as simple time base.

TIM2, TIM3, TIM4, TIM5

STM32F100xx devices feature four synchronizable 4-channel general-purpose timers. These timers are based on a 16-bit auto-reload up/downcounter and a 16-bit prescaler. They feature 4 independent channels each for input capture/output compare, PWM or one-pulse mode output. This gives up to 12 input captures/output compares/PWMs on the largest packages.

The TIM2, TIM3, TIM4, TIM5 general-purpose timers can work together or with the TIM1 advanced-control timer via the Timer Link feature for synchronization or event chaining.

TIM2, TIM3, TIM4, TIM5 all have independent DMA request generation.

These timers are capable of handling quadrature (incremental) encoder signals and the digital outputs from 1 to 3 hall-effect sensors.

Their counters can be frozen in debug mode.

TIM12, TIM13 and TIM14

These timers are based on a 16-bit auto-reload upcounter and a 16-bit prescaler.

TIM12 has two independent channels, whereas TIM13 and TIM14 feature one single channel for input capture/output compare, PWM or one-pulse mode output.

Their counters can be frozen in debug mode.

TIM15, TIM16 and TIM17

These timers are based on a 16-bit auto-reload upcounter and a 16-bit prescaler.

TIM15 has two independent channels, whereas TIM16 and TIM17 feature one single channel for input capture/output compare, PWM or one-pulse mode output.

The TIM15, TIM16 and TIM17 timers can work together, and TIM15 can also operate with TIM1 via the Timer Link feature for synchronization or event chaining.

TIM15 can be synchronized with TIM16 and TIM17.

TIM15, TIM16, and TIM17 have a complementary output with dead-time generation and independent DMA request generation

Their counters can be frozen in debug mode.

Basic timers TIM6 and TIM7

These timers are mainly used for DAC trigger generation. They can also be used as a generic 16-bit time base.

Independent watchdog

The independent watchdog is based on a 12-bit downcounter and 8-bit prescaler. It is clocked from an independent 40 kHz internal RC and as it operates independently from the main clock, it can operate in Stop and Standby modes. It can be used as a watchdog to reset the device when a problem occurs, or as a free running timer for application timeout management. It is hardware or software configurable through the option bytes. The counter can be frozen in debug mode.

HDMI (high-definition multimedia interface) consumer electronics control (CEC)

The STM32F100xx value line embeds a HDMI-CEC controller that provides hardware support of consumer electronics control (CEC) (Appendix supplement 1 to the HDMI standard).

This protocol provides high-level control functions between all audiovisual products in an environment. It is specified to operate at low speeds with minimum processing and memory overhead.

2.2.22 GPIOs (general-purpose inputs/outputs)

Each of the GPIO pins can be configured by software as output (push-pull or open-drain), as input (with or without pull-up or pull-down) or as peripheral alternate function. Most of the GPIO pins are shared with digital or analog alternate functions. All GPIOs are high current capable.

The I/Os alternate function configuration can be locked if needed following a specific sequence in order to avoid spurious writing to the I/Os registers.

2.2.23 Remap capability

This feature allows the use of a maximum number of peripherals in a given application. Indeed, alternate functions are available not only on the default pins but also on other specific pins onto which they are remappable. This has the advantage of making board design and port usage much more flexible.

For details refer to *Table 4: High-density STM32F100xx pin definitions*; it shows the list of remappable alternate functions and the pins onto which they can be remapped. See the STM32F100xx reference manual for software considerations.

2.2.24 ADC (analog-to-digital converter)

The 12-bit analog to digital converter has up to 16 external channels and performs conversions in single-shot or scan modes. In scan mode, automatic conversion is performed on a selected group of analog inputs.

The ADC can be served by the DMA controller.

An analog watchdog feature allows very precise monitoring of the converted voltage of one, some or all selected channels. An interrupt is generated when the converted voltage is outside the programmed thresholds.

2.2.25 DAC (digital-to-analog converter)

The two 12-bit buffered DAC channels can be used to convert two digital signals into two analog voltage signal outputs. The chosen design structure is composed of integrated resistor strings and an amplifier in noninverting configuration.

Figure 5. STM32F100xx value line in LQFP64 pinout

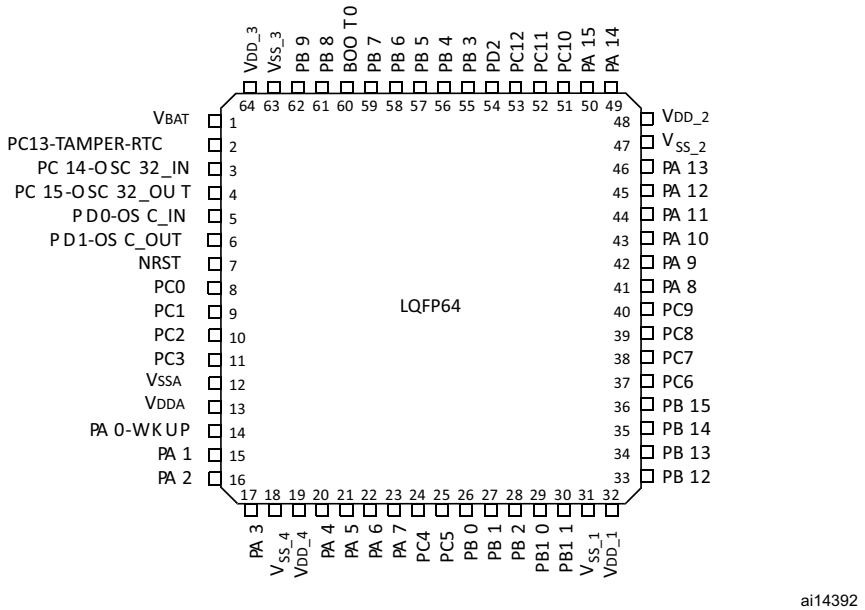

Table 4. High-density STM32F100xx pin definitions

Pins			Pin name	Type(1)	I/O Level(2)	Main function(3) (after reset)	Alternate functions(4)	
LQFP144	LQFP100	LQFP64					Default	Remap
1	1	-	PE2	I/O	FT	PE2	TRACECK/ FSMC_A23	-
2	2	-	PE3	I/O	FT	PE3	TRACED0/FSMC_A19	-
3	3	-	PE4	I/O	FT	PE4	TRACED1/FSMC_A20	-
4	4	-	PE5	I/O	FT	PE5	TRACED2/FSMC_A21	-
5	5	-	PE6	I/O	FT	PE6	TRACED3/FSMC_A22	-
6	6	1	V_{BAT}	S	-	V_{BAT}	-	-
7	7	2	PC13-TAMPER-RTC(5)	I/O	-	PC13(6)	TAMPER-RTC	-
8	8	3	PC14-OSC32_IN(5)	I/O	-	PC14(6)	OSC32_IN	-
9	9	4	PC15-OSC32_OUT(5)	I/O	-	PC15(6)	OSC32_OUT	-
10	-	-	PF0	I/O	FT	PF0	FSMC_A0	-
11	-	-	PF1	I/O	FT	PF1	FSMC_A1	-
12	-	-	PF2	I/O	FT	PF2	FSMC_A2	-
13	-	-	PF3	I/O	FT	PF3	FSMC_A3	-

Table 4. High-density STM32F100xx pin definitions (continued)

Pins			Pin name	Type(1)	I/O Level(2)	Main function(3) (after reset)	Alternate functions(4)	
LQFP144	LQFP100	LQFP64					Default	Remap
14	-	-	PF4	I/O	FT	PF4	FSMC_A4	-
15	-	-	PF5	I/O	FT	PF5	FSMC_A5	-
16	10	-	V_{SS_5}	S	-	V_{SS_5}	-	-
17	11	-	V_{DD_5}	S	-	V_{DD_5}	-	-
18	-	-	PF6	I/O	-	PF6	-	-
19	-	-	PF7	I/O	-	PF7	-	-
20	-	-	PF8	I/O	-	PF8	-	-
21	-	-	PF9	I/O	-	PF9	-	-
22	-	-	PF10	I/O	-	PF10	-	-
23	12	5	OSC_IN	I	-	OSC_IN	-	PD0(7)
24	13	6	OSC_OUT	O	-	OSC_OUT	-	PD1(7)
25	14	7	NRST	I/O	-	NRST	-	-
26	15	8	PC0	I/O	-	PC0	ADC_IN10	-
27	16	9	PC1	I/O	-	PC1	ADC_IN11	-
28	17	10	PC2	I/O	-	PC2	ADC_IN12	-
29	18	11	PC3	I/O	-	PC3	ADC_IN13	-
30	19	12	V_{SSA}	S	-	V_{SSA}	-	-
31	20	-	V_{REF-}	S	-	V_{REF-}	-	-
32	21	-	V_{REF+}	S	-	V_{REF+}	-	-
33	22	13	V_{DDA}	S	-	V_{DDA}	-	-
34	23	14	PA0-WKUP	I/O	-	PA0	WKUP/USART2_CTS(8) ADC_IN0 TIM2_CH1_ETR TIM5_CH1	-
35	24	15	PA1	I/O	-	PA1	USART2_RTS(8) ADC_IN1/ TIM5_CH2/TIM2_CH2(8)	-
36	25	16	PA2	I/O	-	PA2	USART2_TX(8)/TIM5_CH3 ADC_IN2/ TIM15_CH1 TIM2_CH3 (8)	-
37	26	17	PA3	I/O	-	PA3	USART2_RX(8)/TIM5_CH4 ADC_IN3/TIM2_CH4(8) / TIM15_CH2	-
38	27	18	V_{SS_4}	S	-	V_{SS_4}	-	-
39	28	19	V_{DD_4}	S	-	V_{DD_4}	-	-

Figure 7. Pin loading conditions

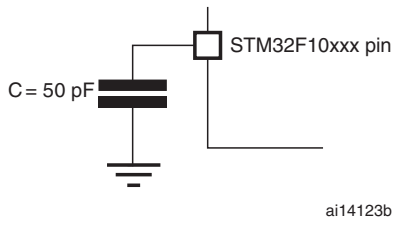

Figure 8. Pin input voltage

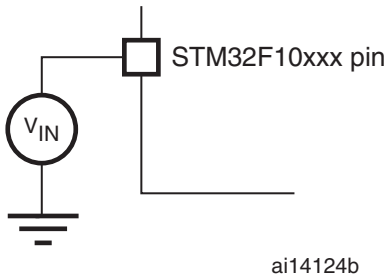

5.1.6 Power supply scheme

Figure 9. Power supply scheme

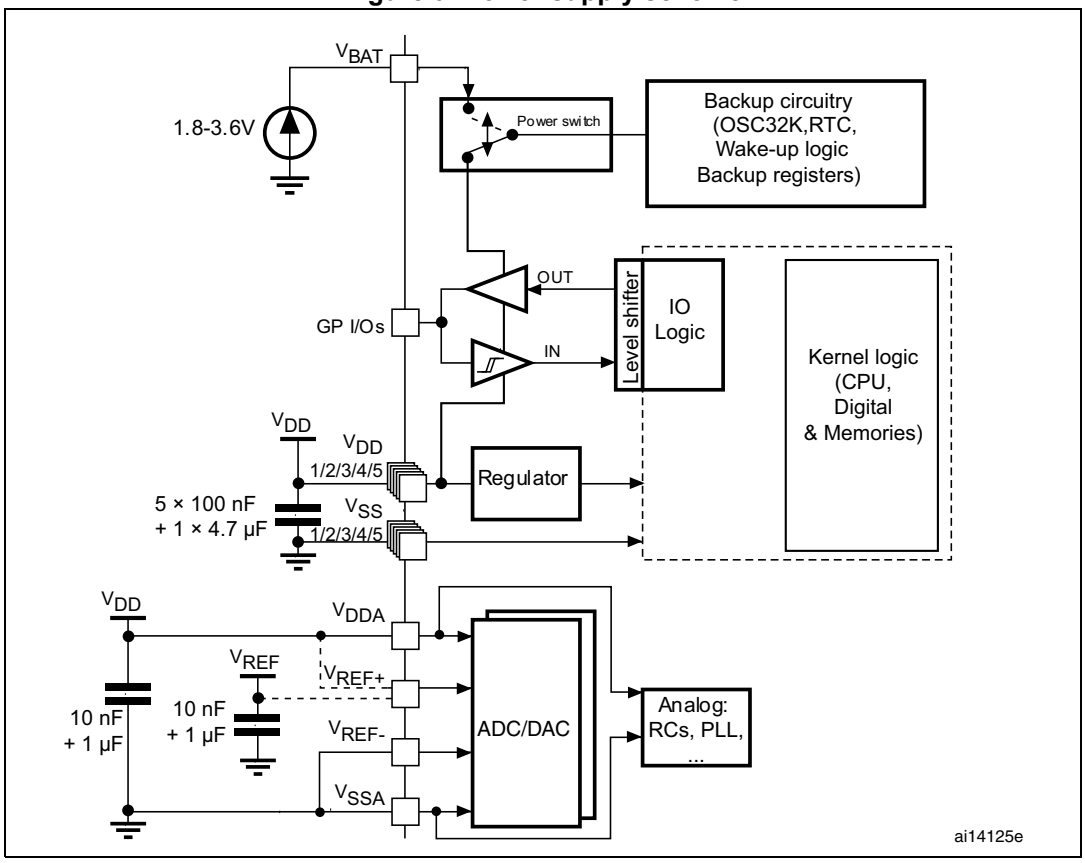

Caution: In *Figure 9*, the 4.7 µF capacitor must be connected to V_{DD3}.

Table 16. Typical and maximum current consumptions in Stop and Standby modes

Symbol	Parameter	Conditions	Typ(1)			Max		Unit
			V_{DD}/V_{BAT} = 2.0 V	V_{DD}/V_{BAT} = 2.4 V	V_{DD}/V_{BAT} = 3.3 V	T_A = 85 °C	T_A = 105 °C	
I_{DD}	Supply current in Stop mode	Regulator in Run mode, Low-speed and high-speed internal RC oscillators and high-speed oscillator OFF (no independent watchdog)	-	-	31	320	670	µA
		Regulator in Low-Power mode, Low-speed and high-speed internal RC oscillators and high-speed oscillator OFF (no independent watchdog)	-	-	24	305	650	
	Supply current in Standby mode	Low-speed internal RC oscillator and independent watchdog ON	-	-	3.2	-	-	
		Low-speed internal RC oscillator ON, independent watchdog OFF	-	-	3.1	-	-	
		Low-speed internal RC oscillator and independent watchdog OFF, low-speed oscillator and RTC OFF	-	-	2.2	3.9	5.7	
I_{DD_VBAT}	Backup domain supply current	Low-speed oscillator and RTC ON	1.0	1.2	1.4	2	2.3	

1. Typical values are measured at T_A = 25 °C.

Typical current consumption

The MCU is placed under the following conditions:

- All I/O pins are in input mode with a static value at V_{DD} or V_{SS} (no load)
- All peripherals are disabled except if it is explicitly mentioned
- When the peripherals are enabled $f_{PCLK1} = f_{HCLK}/4$, $f_{PCLK2} = f_{HCLK}/2$, $f_{ADCCLK} = f_{PCLK2}/4$

The parameters given in *Table 17* are derived from tests performed under the ambient temperature and V_{DD} supply voltage conditions summarized in *Table 9*.

Figure 22. Synchronous non-multiplexed PSRAM write timings

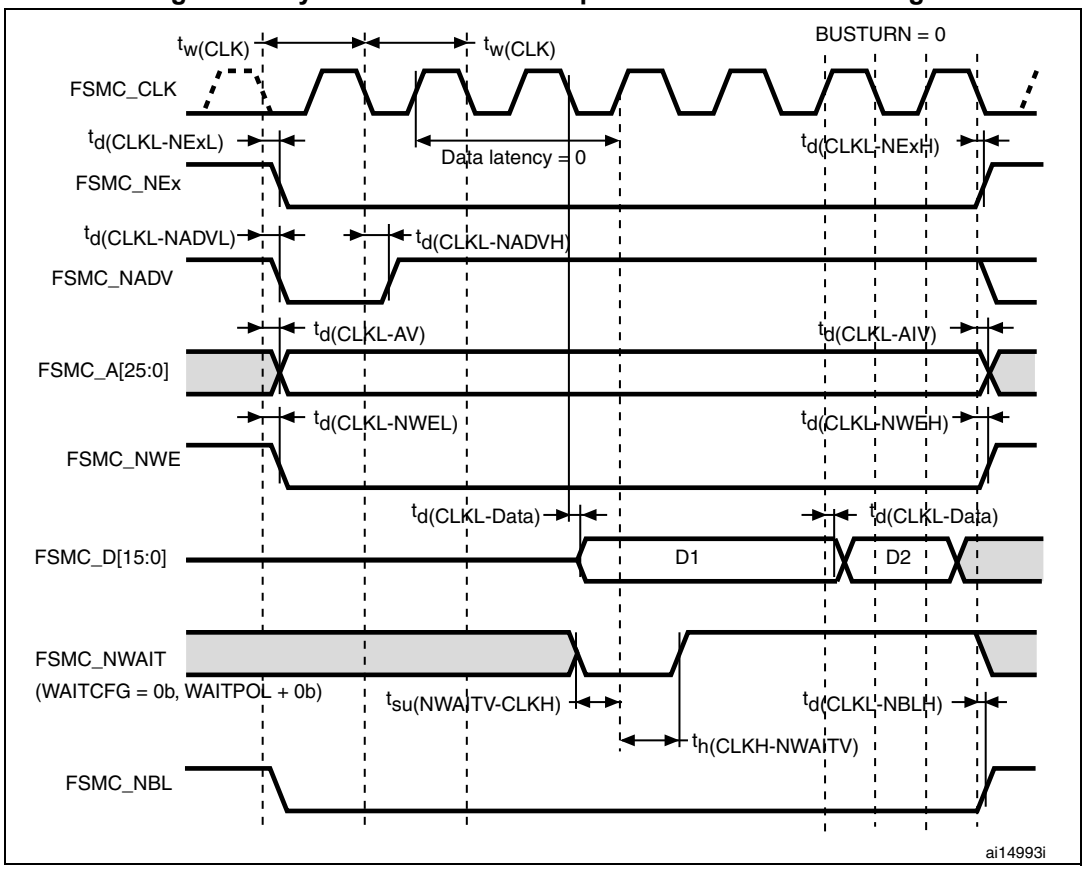

Table 37. Synchronous non-multiplexed PSRAM write timings(1)(2)

Symbol	Parameter	Min	Max	Unit
$t_{w(CLK)}$	FSMC_CLK period	27.7	-	ns
$t_{d(CLKL-NExL)}$	FSMC_CLK low to FSMC_NEx low (x = 0...2)	-	2	ns
$t_{d(CLKL-NExH)}$	FSMC_CLK low to FSMC_NEx high (x = 0...2)	2	-	ns
$t_{d(CLKL-NADVL)}$	FSMC_CLK low to FSMC_NADV low	-	4	ns
$t_{d(CLKL-NADVH)}$	FSMC_CLK low to FSMC_NADV high	5	-	ns
$t_{d(CLKL-AV)}$	FSMC_CLK low to FSMC_Ax valid (x = 16...25)	-	0	ns
$t_{d(CLKL-AIV)}$	FSMC_CLK low to FSMC_Ax invalid (x = 16...25)	2	-	ns
$t_{d(CLKL-NWEL)}$	FSMC_CLK low to FSMC_NWE low	-	1	ns
$t_{d(CLKL-NWEH)}$	FSMC_CLK low to FSMC_NWE high	1	-	ns
$t_{d(CLKL-Data)}$	FSMC_D[15:0] valid data after FSMC_CLK low	-	6	ns
$t_{su(NWAITV-CLKH)}$	FSMC_NWAIT valid before FSMC_CLK high	7	-	ns
$t_{h(CLKH-NWAITV)}$	FSMC_NWAIT valid after FSMC_CLK high	2	-	ns
$t_{d(CLKL-NBLH)}$	FSMC_CLK low to FSMC_NBL high	1	-	ns

1. C_L = 15 pF.
2. Preliminary values.

5.3.11 EMC characteristics

Susceptibility tests are performed on a sample basis during device characterization.

Functional EMS (Electromagnetic susceptibility)

While a simple application is executed on the device (toggling 2 LEDs through I/O ports). the device is stressed by two electromagnetic events until a failure occurs. The failure is indicated by the LEDs:

- **Electrostatic discharge (ESD)** (positive and negative) is applied to all device pins until a functional disturbance occurs. This test is compliant with the IEC 61000-4-2 standard.
- **FTB**: A Burst of Fast Transient voltage (positive and negative) is applied to V_{DD} and V_{SS} through a 100 pF capacitor, until a functional disturbance occurs. This test is compliant with the IEC 61000-4-4 standard.

A device reset allows normal operations to be resumed.

The test results are given in *Table 38*. They are based on the EMS levels and classes defined in application note AN1709.

Table 38. EMS characteristics

Symbol	Parameter	Conditions	Level/Class
V_{FESD}	Voltage limits to be applied on any I/O pin to induce a functional disturbance	V_{DD} = 3.3 V, T_A = +25 °C, f_{HCLK} = 24 MHz, LQFP144 package, conforms to IEC 61000-4-2	2B
V_{EFTB}	Fast transient voltage burst limits to be applied through 100 pF on V_{DD} and V_{SS} pins to induce a functional disturbance	V_{DD} = 3.3 V, T_A = +25 °C, f_{HCLK} = 24 MHz, LQFP144 package, conforms to IEC 61000-4-4	4A

Designing hardened software to avoid noise problems

EMC characterization and optimization are performed at component level with a typical application environment and simplified MCU software. It should be noted that good EMC performance is highly dependent on the user application and the software in particular.

Therefore it is recommended that the user applies EMC software optimization and pre qualification tests in relation with the EMC level requested for his application.

Software recommendations

The software flowchart must include the management of runaway conditions such as:

- Corrupted program counter
- Unexpected reset
- Critical Data corruption (control registers...)

Prequalification trials

Most of the common failures (unexpected reset and program counter corruption) can be reproduced by manually forcing a low state on the NRST pin or the Oscillator pins for 1 second. To complete these trials, ESD stress can be applied directly on the device, over the range of specification values. When unexpected behavior is detected, the software can be hardened to prevent unrecoverable errors occurring (see application note AN1015).

Figure 28. Recommended NRST pin protection

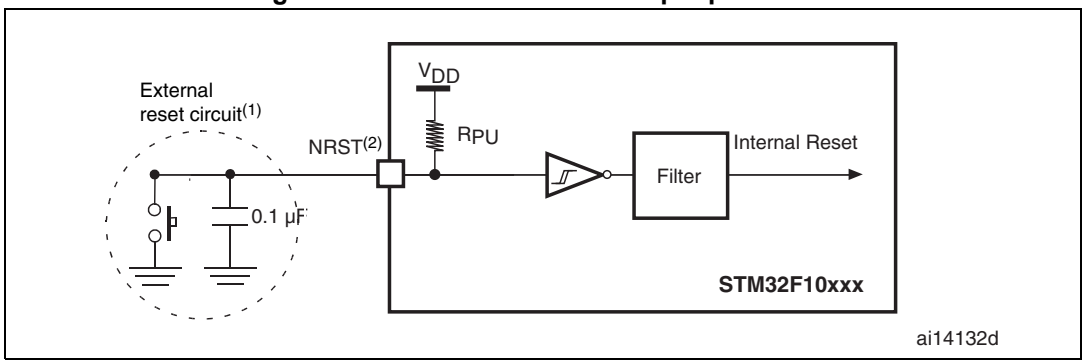

1. The reset network protects the device against parasitic resets.
2. The user must ensure that the level on the NRST pin can go below the $V_{IL(NRST)}$ max level specified in *Table 46*. Otherwise the reset will not be taken into account by the device.

Figure 29. I²C bus AC waveforms and measurement circuit

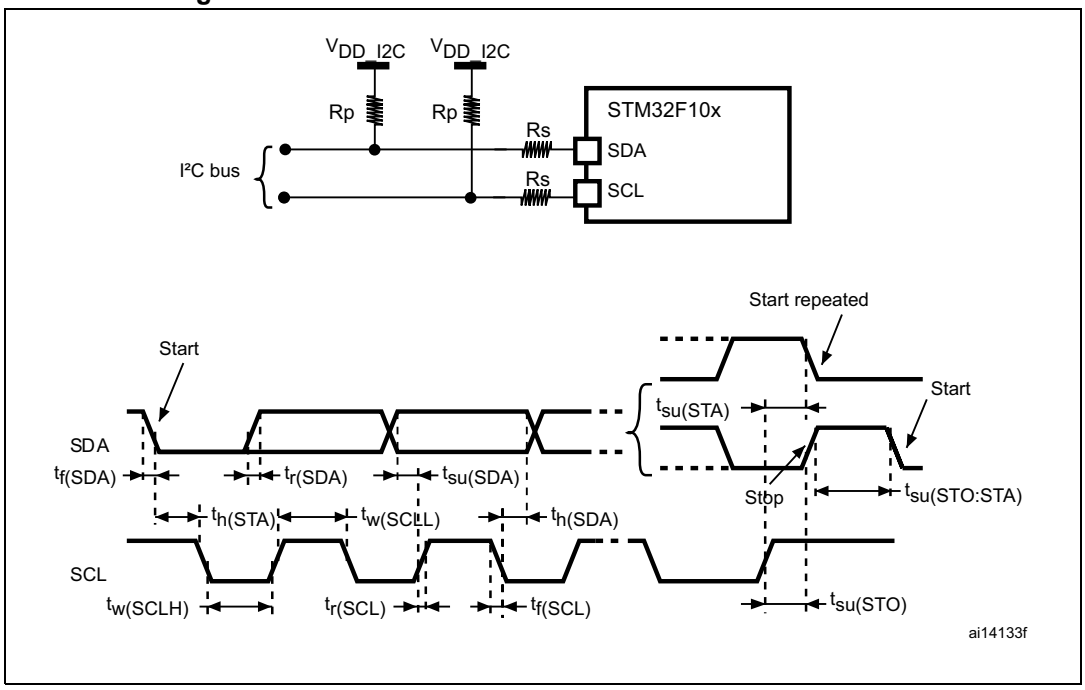

1. Measurement points are done at CMOS levels: $0.3V_{DD}$ and $0.7V_{DD}$.

Table 49. SCL frequency (f_{PCLK1}= 24 MHz, V_{DD} = 3.3 V)(1)(2)

f_{SCL} (kHz)(3)	I2C_CCR value
	R_P = 4.7 kΩ
400	0x8011
300	0x8016
200	0x8021
100	0x0064
50	0x00C8
20	0x01F4

1. R_P = External pull-up resistance, f_{SCL} = I²C speed,
2. For speeds around 400 kHz, the tolerance on the achieved speed is of ±2%. For other speed ranges, the tolerance on the achieved speed ±1%. These variations depend on the accuracy of the external components used to design the application.
3. Guaranteed by design, not tested in production.

Note: Any positive injection current within the limits specified for $I_{INJ(PIN)}$ and $\Sigma I_{INJ(PIN)}$ in Section 5.3.13 does not affect the ADC accuracy.

Figure 33. ADC accuracy characteristics

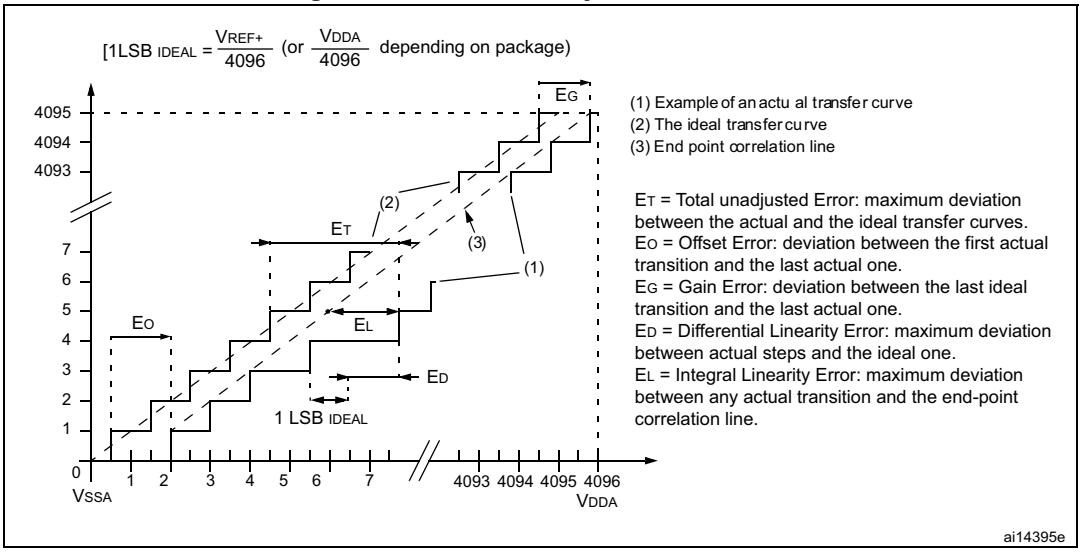

Figure 34. Typical connection diagram using the ADC

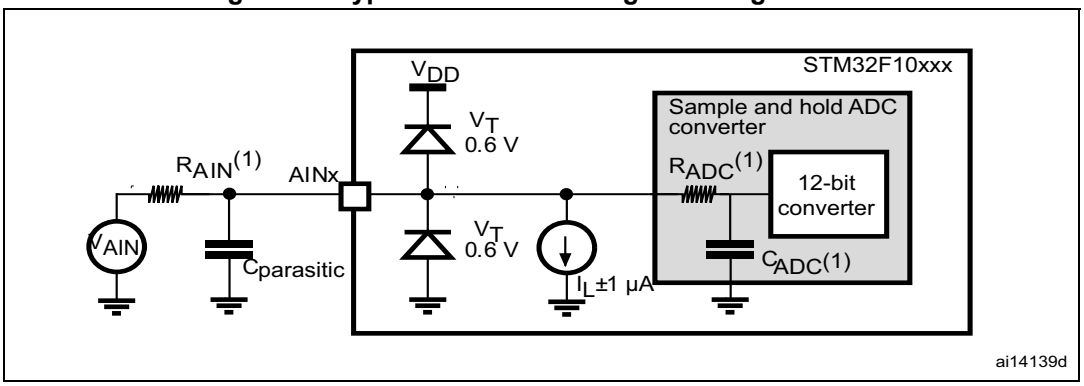

1. Refer to *Table 51* for the values of R_{AIN}, R_{ADC} and C_{ADC}.
2. $C_{parasitic}$ represents the capacitance of the PCB (dependent on soldering and PCB layout quality) plus the pad capacitance (roughly 7 pF). A high $C_{parasitic}$ value will downgrade conversion accuracy. To remedy this, f_{ADC} should be reduced.

General PCB design guidelines

Power supply decoupling should be performed as shown in *Figure 35* or *Figure 36*, depending on whether V_{REF+} is connected to V_{DDA} or not. The 10 nF capacitors should be ceramic (good quality). They should be placed them as close as possible to the chip.

6 Package characteristics

6.1 Package mechanical data

In order to meet environmental requirements, ST offers these devices in different grades of ECOPACK® packages, depending on their level of environmental compliance. ECOPACK® specifications, grade definitions and product status are available at: *www.st.com*. ECOPACK® is an ST trademark.

6.2 LQFP144 package information

Figure 38. LQFP144 - 144-pin, 20 x 20 mm low-profile quad flat package outline

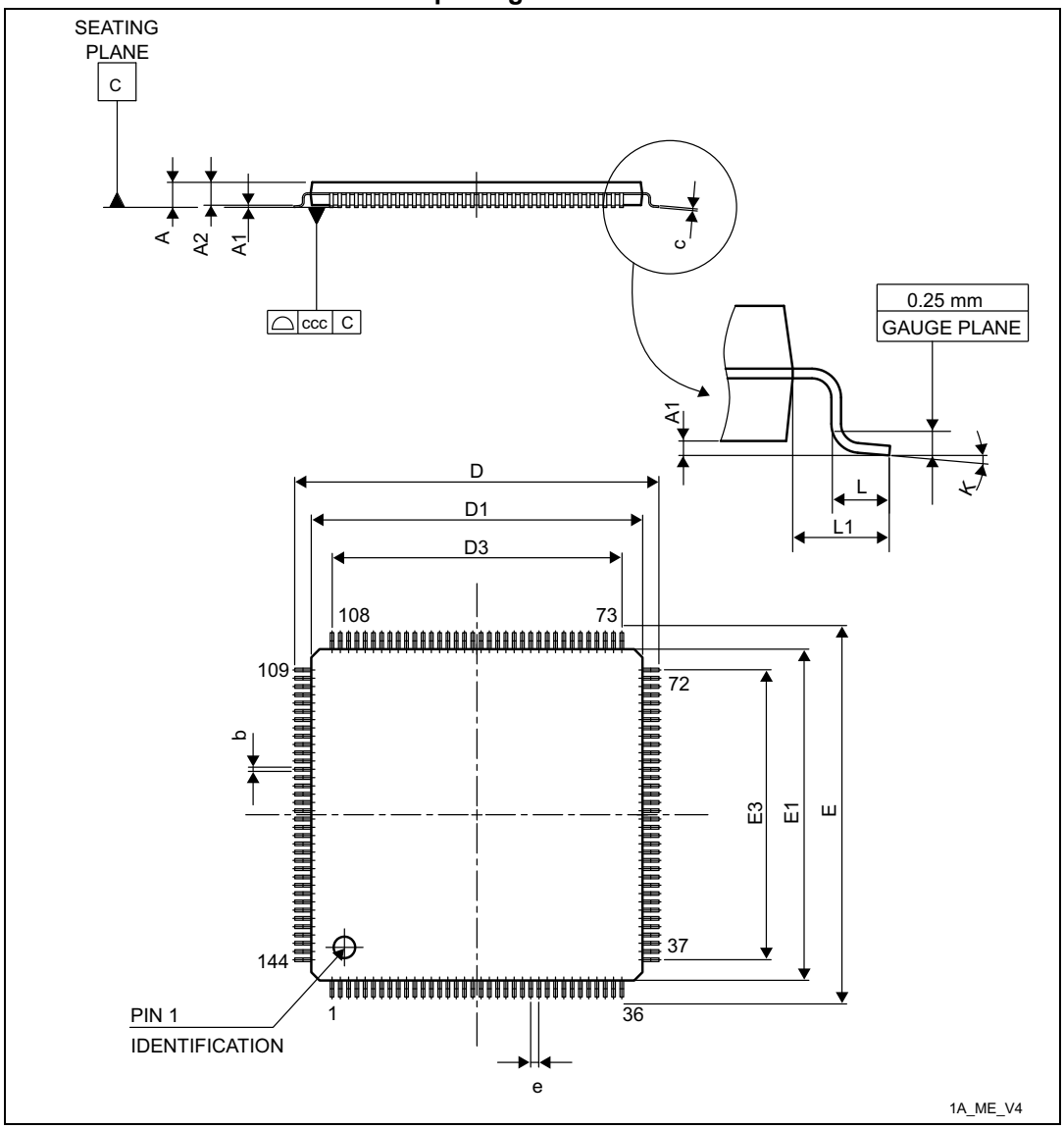

1. Drawing is not to scale.

Table 58. LQPF100 - 100-pin, 14 x 14 mm low-profile quad flat package mechanical data (continued)

Symbol	millimeters			inches[1]		
	Min	Typ	Max	Min	Typ	Max
E3	-	12.000	-	-	0.4724	-
e	-	0.500	-	-	0.0197	-
L	0.450	0.600	0.750	0.0177	0.0236	0.0295
L1	-	1.000	-	-	0.0394	-
k	0.0°	3.5°	7.0°	0.0°	3.5°	7.0°
ccc	-	-	0.080	-	-	0.0031

1. Values in inches are converted from mm and rounded to 4 decimal digits.

Figure 42. LQFP100 - 100-pin, 14 x 14 mm low-profile quad flat recommended footprint

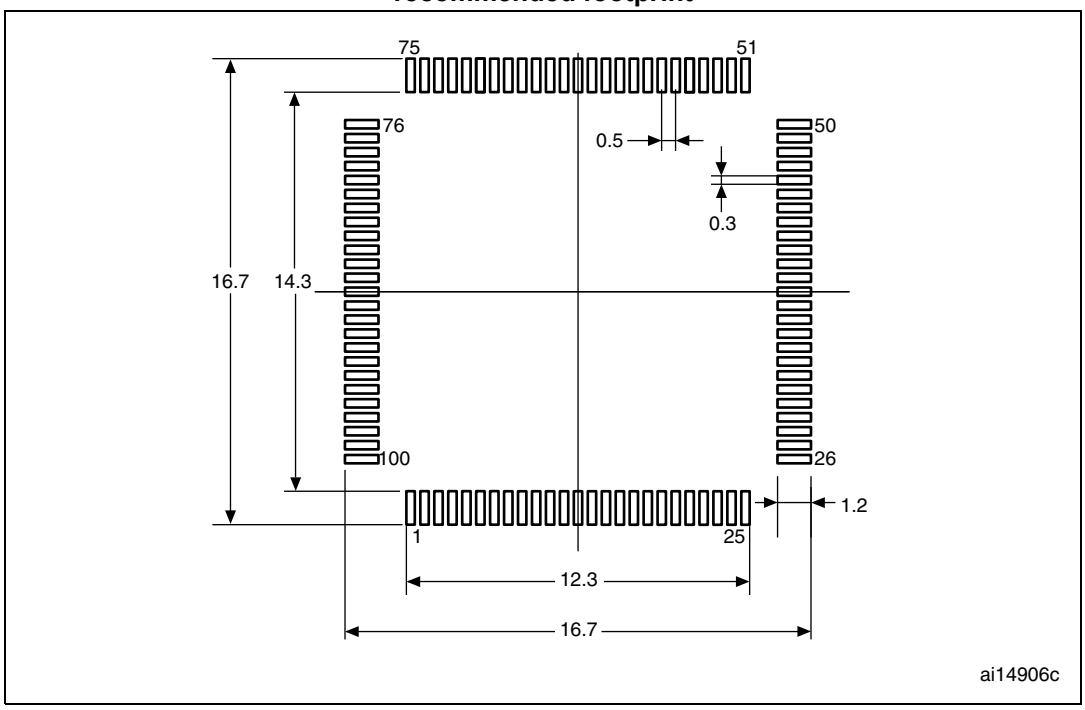

1. Dimensions are expressed in millimeters.

6.4 LQFP64 package information

Figure 44.LQFP64 – 10 x 10 mm 64 pin low-profile quad flat package outline

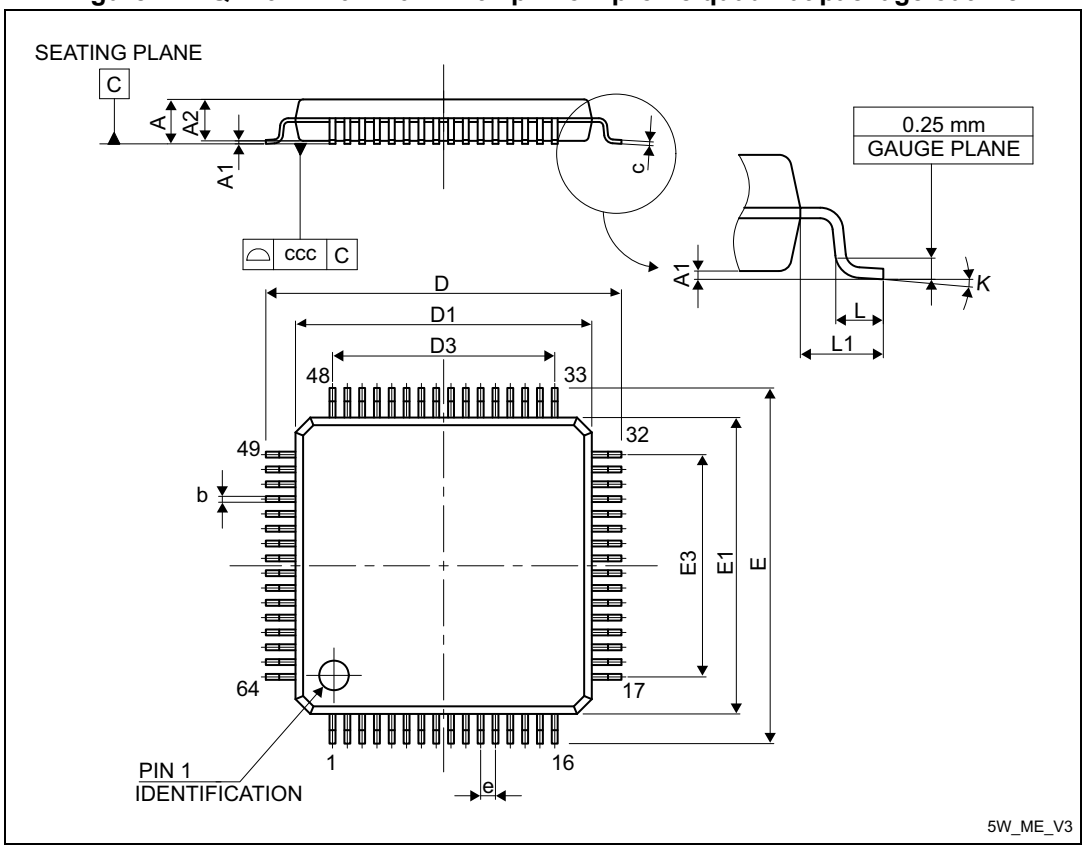

1. Drawing is not in scale.

Table 59. LQFP64 - 64-pin, 10 x 10 mm low-profile quad flat package mechanical data

Symbol	millimeters			inches(1)		
	Min	Typ	Max	Min	Typ	Max
A	-	-	1.600	-	-	0.0630
A1	0.050	-	0.150	0.0020	-	0.0059
A2	1.350	1.400	1.450	0.0531	0.0551	0.0571
b	0.170	0.220	0.270	0.0067	0.0087	0.0106
c	0.090	-	0.200	0.0035	-	0.0079
D	-	12.000	-	-	0.4724	-
D1	-	10.000	-	-	0.3937	-
D3	-	7.500	-	-	0.2953	-
E	-	12.000	-	-	0.4724	-
E1	-	10.000	-	-	0.3937	-
E3	-	7.500	-	-	0.2953	-

Device marking for LQFP64

The following figure shows the device marking for the LQFP64 package.

Figure 46.LQFP64 marking example (package top view)

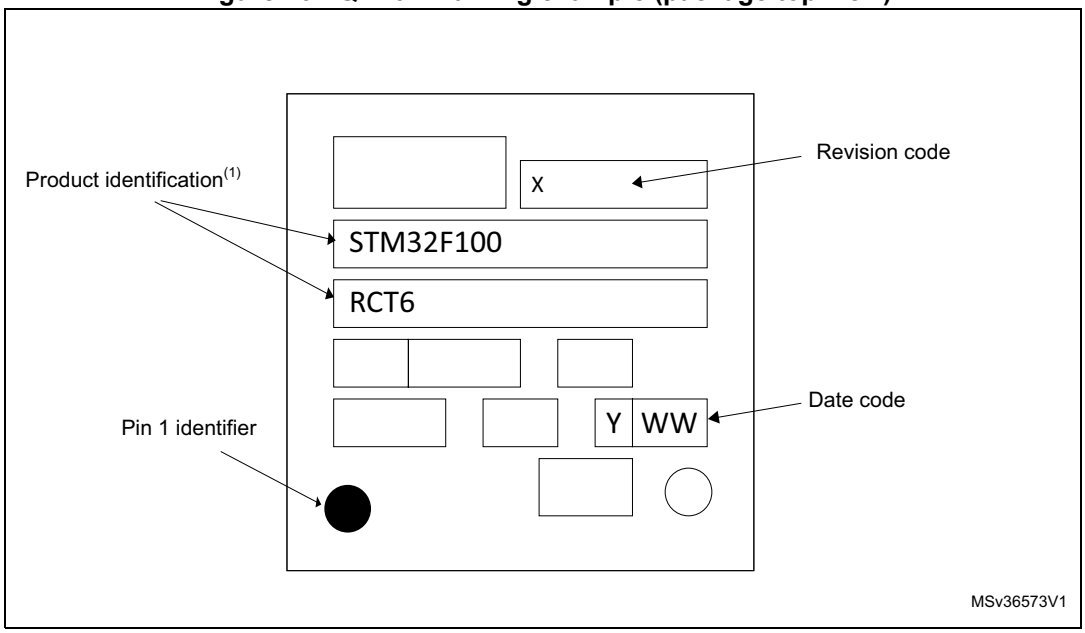

1. Parts marked as “ES”, “E” or accompanied by an Engineering Sample notification letter, are not yet qualified and therefore not yet ready to be used in production and any consequences deriving from such usage will not be at ST charge. In no event, ST will be liable for any customer usage of these engineering samples in production. ST Quality has to be contacted prior to any decision to use these Engineering samples to run qualification activity.