STMicroelectronics - ST72F324K6TC/TR Datasheet

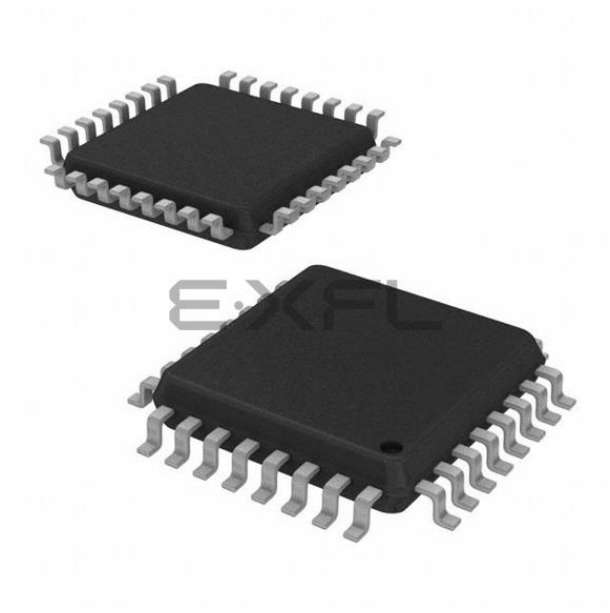

Welcome to E-XFL.COM

What is "Embedded - Microcontrollers"?

"Embedded - Microcontrollers" refer to small, integrated circuits designed to perform specific tasks within larger systems. These microcontrollers are essentially compact computers on a single chip, containing a processor core, memory, and programmable input/output peripherals. They are called "embedded" because they are embedded within electronic devices to control various functions, rather than serving as standalone computers. Microcontrollers are crucial in modern electronics, providing the intelligence and control needed for a wide range of applications.

Applications of "Embedded - Microcontrollers"

Details	
Product Status	Obsolete
Core Processor	ST7
Core Size	8-Bit
Speed	8MHz
Connectivity	SCI, SPI
Peripherals	LVD, POR, PWM, WDT
Number of I/O	24
Program Memory Size	32KB (32K x 8)
Program Memory Type	FLASH
EEPROM Size	-
RAM Size	1K x 8
Voltage - Supply (Vcc/Vdd)	3.8V ~ 5.5V
Data Converters	A/D 8x10b
Oscillator Type	Internal
Operating Temperature	-40°C ~ 125°C (TA)
Mounting Type	Surface Mount
Package / Case	32-LQFP
Supplier Device Package	-
Purchase URL	https://www.e-xfl.com/product-detail/stmicroelectronics/st72f324k6tc-tr

I/O PORTS (Cont'd)

Table 11. I/O Port Configurations

	Hardware Configuration
INPUT [1]	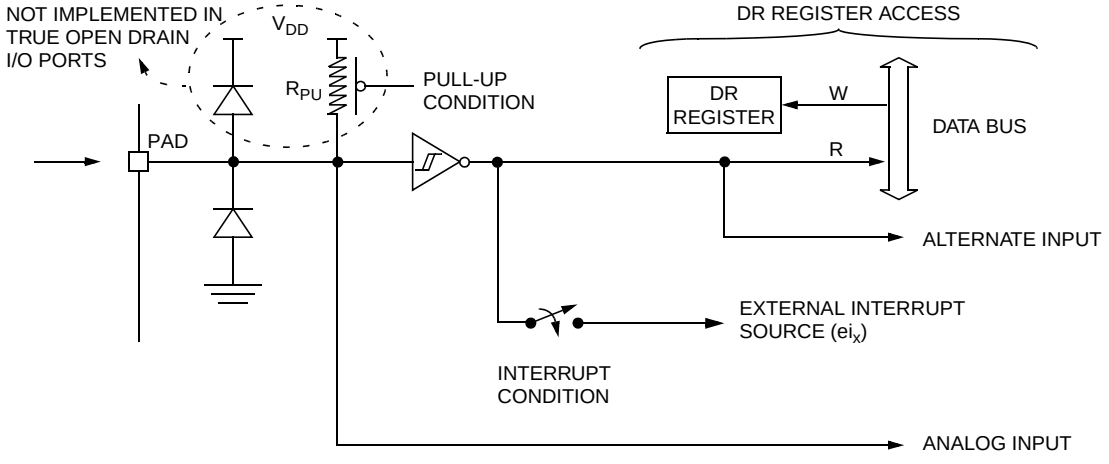
OPEN-DRAIN OUTPUT [2]	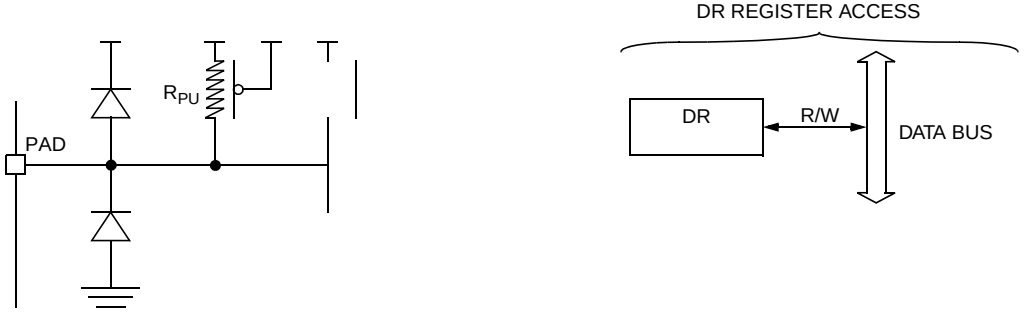
PUSH-PULL OUTPUT [2]	

Notes:

1. When the I/O port is in input configuration and the associated alternate function is enabled as an output, reading the DR register will read the alternate function output status.
2. When the I/O port is in output configuration and the associated alternate function is enabled as an input, the alternate function reads the pin status given by the DR register content.