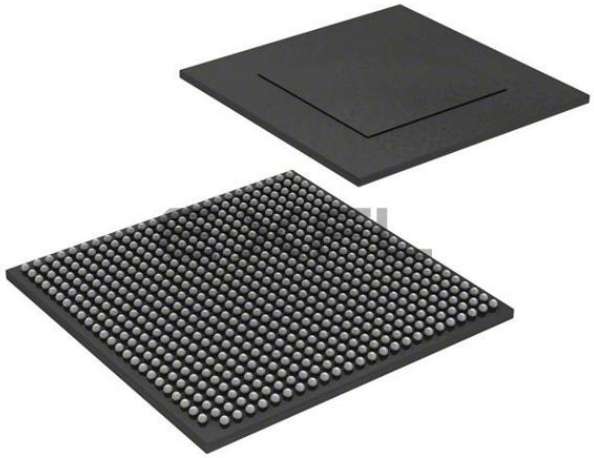

Welcome to E-XFL.COM

Understanding Embedded - Microprocessors

Embedded microprocessors are specialized computing chips designed to perform specific tasks within an embedded system. Unlike general-purpose microprocessors found in personal computers, embedded microprocessors are tailored for dedicated functions within larger systems, offering optimized performance, efficiency, and reliability. These microprocessors are integral to the operation of countless electronic devices, providing the computational power necessary for controlling processes, handling data, and managing communications.

Applications of Embedded - Microprocessors

Embedded microprocessors are utilized across a broad spectrum of applications, making them indispensable in

Details	
Product Status	Active
Core Processor	ARM® Cortex®-A9
Number of Cores/Bus Width	4 Core, 32-Bit
Speed	1.0GHz
Co-Processors/DSP	Multimedia; NEON™ SIMD
RAM Controllers	LPDDR2, DDR3L, DDR3
Graphics Acceleration	Yes
Display & Interface Controllers	HDMI, Keypad, LCD, LVDS, MIPI/DSI, Parallel
Ethernet	10/100/1000Mbps (1)
SATA	SATA 3Gbps (1)
USB	USB 2.0 + PHY (3), USB 2.0 OTG + PHY (1)
Voltage - I/O	1.8V, 2.5V, 2.8V, 3.3V
Operating Temperature	-40°C ~ 125°C (TJ)
Security Features	ARM TZ, A-HAB, CAAM, CSU, SJC, SNVS
Package / Case	624-FBGA, FCBGA
Supplier Device Package	624-FCBGA (21x21)
Purchase URL	https://www.e-xfl.com/product-detail/nxp-semiconductors/mcimx6qp4avt1aa

The i.MX 6DualPlus/6QuadPlus processors are specifically useful for applications such as the following:

- Reconfigurable instrument cluster high performance infotainment
- Graphics rendering for Human Machine Interfaces (HMI)
- Video processing and display

The i.MX 6DualPlus/6QuadPlus processors offers numerous advanced features, such as:

- Multilevel memory system—The multilevel memory system of each processor is based on the L1 instruction and data caches, L2 cache, and internal and external memory. The processors support many types of external memory devices, including DDR3, DDR3L, LPDDR2, NOR Flash, PSRAM, cellular RAM, NAND Flash (MLC and SLC), OneNAND™, and managed NAND, including eMMC up to rev 4.4/4.41.
- Smart speed technology—The processors have power management throughout the device that enables the rich suite of multimedia features and peripherals to consume minimum power in both active and various low power modes. Smart speed technology enables the designer to deliver a feature-rich product, requiring levels of power far lower than industry expectations.
- Dynamic voltage and frequency scaling—The processors improve the power efficiency of devices by scaling the voltage and frequency to optimize performance.
- Multimedia powerhouse—The multimedia performance of each processor is enhanced by a multilevel cache system, Neon® MPE (Media Processor Engine) co-processor, a multi-standard hardware video codec, 2 autonomous and independent image processing units (IPU), and a programmable smart DMA (SDMA) controller.
- Powerful graphics acceleration—Each processor provides three independent, integrated graphics processing units: an OpenGL® ES 3.0 3D graphics accelerator with four shaders (up to 198 MTri/s and OpenCL support), 2D graphics accelerator, and dedicated OpenVG™ 1.1 accelerator.
- Interface flexibility—Each processor supports connections to a variety of interfaces: LCD controller for up to four displays (including parallel display, HDMI1.4, MIPI display, and LVDS display), dual CMOS sensor interface (parallel or through MIPI), high-speed USB on-the-go with PHY, high-speed USB host with PHY, multiple expansion card ports (high-speed MMC/SDIO host and other), 10/100/1000 Mbps Gigabit Ethernet controller, and a variety of other popular interfaces (such as UART, I^2C, and I^2S serial audio, SATA-II, and PCIe-II).
- Automotive environment support—Each processor includes interfaces, such as two CAN ports, an MLB150/50 port, an ESAI audio interface, and an asynchronous sample rate converter for multichannel/multisource audio.
- Advanced security—The processors deliver hardware-enabled security features that enable secure e-commerce, digital rights management (DRM), information encryption, secure boot, and secure software downloads. The security features are discussed in detail in the i.MX 6Dual/6Quad security reference manual (IMX6DQ6SDLSRM).
- Integrated power management—The processors integrate linear regulators and internally generate voltage levels for different domains. This significantly simplifies system power management structure.

2 Architectural Overview

The following subsections provide an architectural overview of the i.MX 6DualPlus/6QuadPlus processor system.

2.1 Block Diagram

Figure 2 shows the functional modules in the i.MX 6DualPlus/6QuadPlus processor system.

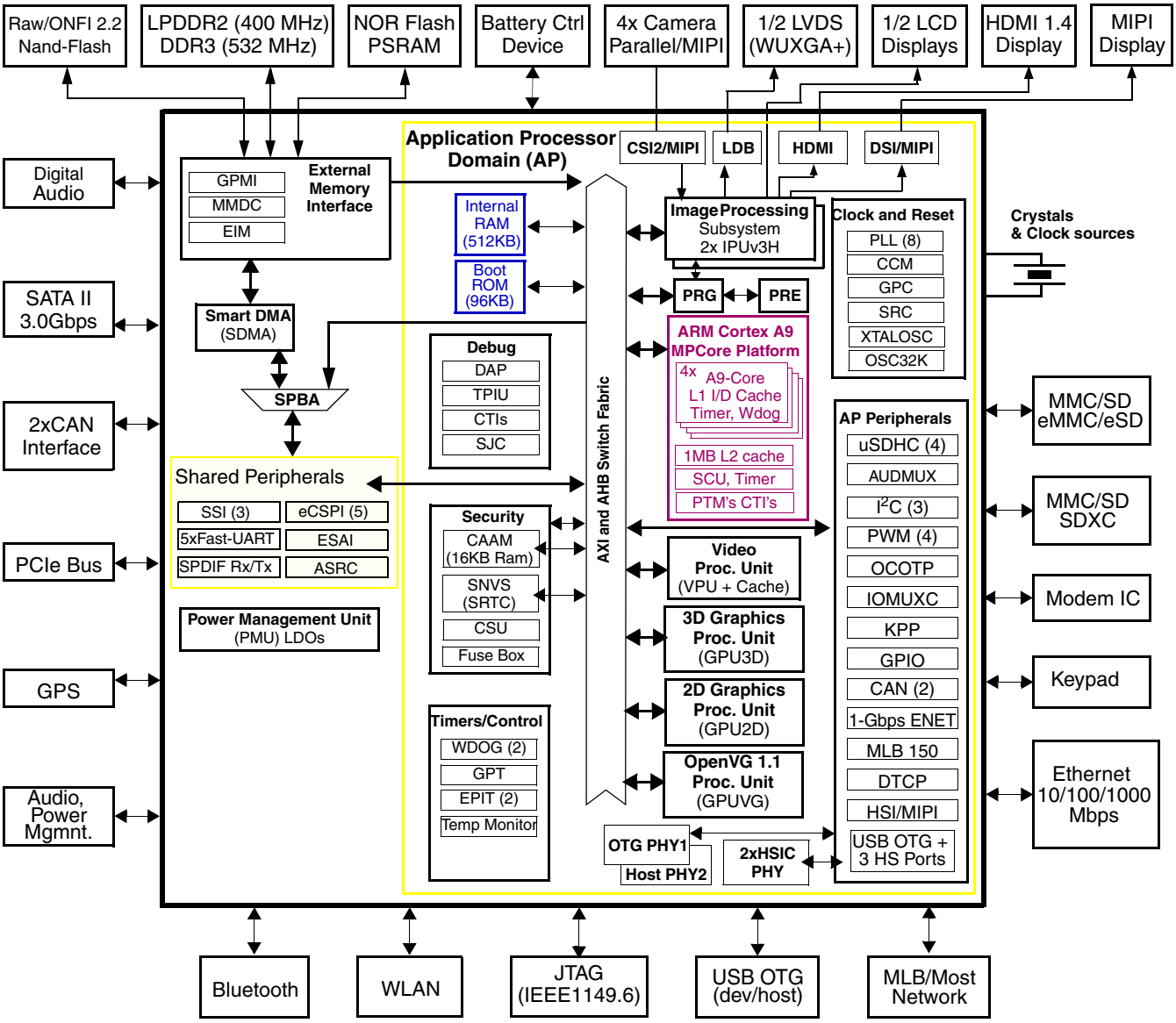

Figure 2. i.MX 6DualPlus/6QuadPlus Automotive Grade System Block Diagram

NOTE

The numbers in brackets indicate number of module instances. For example, PWM (4) indicates four separate PWM peripherals.

Table 2. i.MX 6DualPlus/6QuadPlus Modules List (continued)

Block Mnemonic	Block Name	Subsystem	Brief Description
CSI	MIPI CSI-2 Interface	Multimedia Peripherals	The CSI IP provides MIPI CSI-2 standard camera interface port. The CSI-2 interface supports up to 1 Gbps for up to 3 data lanes and up to 800 Mbps for 4 data lanes.
CSU	Central Security Unit	Security	The Central Security Unit (CSU) is responsible for setting comprehensive security policy within the i.MX 6DualPlus/6QuadPlus platform. The Security Control Registers (SCR) of the CSU are set during boot time by the HAB and are locked to prevent further writing.
CTI-0 CTI-1 CTI-2 CTI-3 CTI-4	Cross Trigger Interfaces	Debug / Trace	Cross Trigger Interfaces allows cross-triggering based on inputs from masters attached to CTIs. The CTI module is internal to the Cortex-A9 Core Platform.
CTM	Cross Trigger Matrix	Debug / Trace	Cross Trigger Matrix IP is used to route triggering events between CTIs. The CTM module is internal to the Cortex-A9 Core Platform.
DAP	Debug Access Port	System Control Peripherals	The DAP provides real-time access for the debugger without halting the core to: • System memory and peripheral registers • All debug configuration registers The DAP also provides debugger access to JTAG scan chains. The DAP module is internal to the Cortex-A9 Core Platform.
DCIC-0 DCIC-1	Display Content Integrity Checker	Automotive IP	The DCIC provides integrity check on portion(s) of the display. Each i.MX 6DualPlus/6QuadPlus processor has two such modules, one for each IPU.
DSI	MIPI DSI interface	Multimedia Peripherals	The MIPI DSI IP provides DSI standard display port interface. The DSI interface support 80 Mbps to 1 Gbps speed per data lane.
eCSPI1-5	Configurable SPI	Connectivity Peripherals	Full-duplex enhanced Synchronous Serial Interface. It is configurable to support Master/Slave modes, four chip selects to support multiple peripherals.
ENET	Ethernet Controller	Connectivity Peripherals	The Ethernet Media Access Controller (MAC) is designed to support 10/100/1000 Mbps Ethernet/IEEE 802.3 networks. An external transceiver interface and transceiver function are required to complete the interface to the media. The i.MX 6DualPlus/6QuadPlus processors also consist of hardware assist for IEEE 1588 standard. For details, see the ENET chapter of the i.MX 6DualPlus/6QuadPlus reference manual (IMX6DQPRM). **Note:** The theoretical maximum performance of 1 Gbps ENET is limited to 470 Mbps (total for Tx and Rx) due to internal bus throughput limitations. The actual measured performance in optimized environment is up to 400 Mbps. For details, see the ERR004512 erratum in the i.MX 6Dual/6Quad errata document (IMX6DQCE).

Table 2. i.MX 6DualPlus/6QuadPlus Modules List (continued)

Block Mnemonic	Block Name	Subsystem	Brief Description
GPU2Dv3	Graphics Processing Unit-2D, ver. 3	Multimedia Peripherals	The GPU2Dv3 provides hardware acceleration for 2D graphics algorithms, such as Bit BLT, stretch BLT, and many other 2D functions.
GPU3Dv6	Graphics Processing Unit-3D, ver. 6	Multimedia Peripherals	The GPU2Dv6 provides hardware acceleration for 3D graphics algorithms with sufficient processor power to run desktop quality interactive graphics applications on displays up to HD1080 resolution. The GPU3D provides OpenGL ES 3.0, including extensions, OpenGL ES 2.0, OpenGL ES 1.1, and OpenVG 1.1
GPUVGv2	Vector Graphics Processing Unit, ver. 2	Multimedia Peripherals	OpenVG graphics accelerator provides OpenVG 1.1 support as well as other accelerations, including Real-time hardware curve tesselation of lines, quadratic and cubic Bezier curves, 16x Line Anti-aliasing, and various Vector Drawing functions.
HDMI Tx	HDMI Tx interface	Multimedia Peripherals	The HDMI module provides HDMI standard interface port to an HDMI 1.4 compliant display.
HSI	MIPI HSI interface	Connectivity Peripherals	The MIPI HSI provides a standard MIPI interface to the applications processor.
I^2C-1 I^2C-2 I^2C-3	I^2C Interface	Connectivity Peripherals	I^2C provide serial interface for external devices. Data rates of up to 400 kbps are supported.
IOMUXC	IOMUX Control	System Control Peripherals	This module enables flexible IO multiplexing. Each IO pad has default and several alternate functions. The alternate functions are software configurable.
IPUv3H-1 IPUv3H-2	Image Processing Unit, ver. 3H	Multimedia Peripherals	IPUv3H enables connectivity to displays and video sources, relevant processing and synchronization and control capabilities, allowing autonomous operation. The IPUv3H supports concurrent output to two display ports and concurrent input from two camera ports, through the following interfaces: • Parallel Interfaces for both display and camera • Single/dual channel LVDS display interface • HDMI transmitter • MIPI/DSI transmitter • MIPI/CSI-2 receiver The processing includes: • Image conversions: resizing, rotation, inversion, and color space conversion • A high-quality de-interlacing filter • Video/graphics combining • Image enhancement: color adjustment and gamut mapping, gamma correction, and contrast enhancement • Support for display backlight reduction
KPP	Key Pad Port	Connectivity Peripherals	KPP Supports 8 x 8 external key pad matrix. KPP features are: • Open drain design • Glitch suppression circuit design • Multiple keys detection • Standby key press detection

Optionally LDO_SOC/VDD_SOC_CAP can be used to power the HDMI, PCIe, and SATA PHY's through external connections.

For additional information, see the i.MX 6DualPlus/6QuadPlus reference manual (IMX6DQPRM).

4.3.2 Regulators for Analog Modules

4.3.2.1 LDO_1P1 / NVCC_PLL_OUT

The LDO_1P1 regulator implements a programmable linear-regulator function from VDD_HIGH_IN (see Table 6 for minimum and maximum input requirements). Typical Programming Operating Range is 1.0 V to 1.2 V with the nominal default setting as 1.1 V. The LDO_1P1 supplies the 24 MHz oscillator, PLLs, and USB PHY. A programmable brown-out detector is included in the regulator that can be used by the system to determine when the load capability of the regulator is being exceeded to take the necessary steps. Current-limiting can be enabled to allow for in-rush current requirements during start-up, if needed. Active-pull-down can also be enabled for systems requiring this feature.

For information on external capacitor requirements for this regulator, see the Hardware Development Guide for i.MX 6Quad, 6Dual, 6DualLite, 6Solo Families of Applications Processors (IMX6DQ6SDLHDG).

For additional information, see the i.MX 6DualPlus/6QuadPlus reference manual (IMX6DQPRM).

4.3.2.2 LDO_2P5 / VDDHIGH_CAP

The LDO_2P5 module implements a programmable linear-regulator function from VDD_HIGH_IN (see Table 6 for min and max input requirements). Typical Programming Operating Range is 2.25 V to 2.75 V with the nominal default setting as 2.5 V. The LDO_2P5 supplies the eFuses, PLLs, and USB PHY. Optionally it can be used to supply the HDMI, LVDS, MIPI, PCIe, and SATA PHY's through external connections. A programmable brown-out detector is included in the regulator that can be used by the system to determine when the load capability of the regulator is being exceeded, to take the necessary steps. Current-limiting can be enabled to allow for in-rush current requirements during start-up, if needed. Active-pull-down can also be enabled for systems requiring this feature. An alternate self-biased low-precision weak-regulator is included that can be enabled for applications needing to keep the output voltage alive during low-power modes where the main regulator driver and its associated global bandgap reference module are disabled. The output of the weak-regulator is not programmable and is a function of the input supply as well as the load current. Typically, with a 3 V input supply the weak-regulator output is 2.525 V and its output impedance is approximately 40 Ω.

For information on external capacitor requirements for this regulator, see the Hardware Development Guide for i.MX 6Quad, 6Dual, 6DualLite, 6Solo Families of Applications Processors (IMX6DQ6SDLHDG).

For additional information, see the i.MX 6DualPlus/6QuadPlus reference manual (IMX6DQPRM).

4.3.2.3 LDO_USB / VDD_VBUS_CAP

The LDO_USB module implements a programmable linear-regulator function from the USB_OTG_VBUS and USB_H1_VBUS voltages (4.4 V–5.25 V) to produce a nominal 3.0 V output voltage. A programmable brown-out detector is included in the regulator that can be used by the system to determine when the load capability of the regulator is being exceeded, to take the necessary steps. This regulator has a built in power-mux that allows the user to select to run the regulator from either VBUS supply, when both are present. If only one of the VBUS voltages is present, then the regulator automatically selects this supply. Current limit is also included to help the system meet in-rush current targets. If no VBUS voltage is present, then the VBUSVALID threshold setting will prevent the regulator from being enabled.

For information on external capacitor requirements for this regulator, see the Hardware Development Guide for i.MX 6Quad, 6Dual, 6DualLite, 6Solo Families of Applications Processors (IMX6DQ6SDLHDG).

For additional information, see the i.MX 6DualPlus/6QuadPlus reference manual (IMX6DQPRM).

4.4 PLL Electrical Characteristics

4.4.1 Audio/Video PLL Electrical Parameters

Table 14. Audio/Video PLL Electrical Parameters

Parameter	Value
Clock output range	650 MHz ~1.3 GHz
Reference clock	24 MHz
Lock time	<11250 reference cycles

4.4.2 528 MHz PLL

Table 15. 528 MHz PLL Electrical Parameters

Parameter	Value
Clock output range	528 MHz PLL output
Reference clock	24 MHz
Lock time	<11250 reference cycles

4.9.3 External Interface Module (EIM)

The following subsections provide information on the EIM. Maximum operating frequency for EIM data transfer is 104 MHz. Timing parameters in this section that are given as a function of register settings or clock periods are valid for the entire range of allowed frequencies (0–104 MHz).

4.9.3.1 EIM Interface Pads Allocation

EIM supports 32-bit, 16-bit and 8-bit devices operating in address/data separate or multiplexed modes. Table 39 provides EIM interface pads allocation in different modes.

Table 39. EIM Internal Module Multiplexing[1]

Setup	Non Multiplexed Address/Data Mode							Multiplexed Address/Data mode	
	8 Bit				16 Bit		32 Bit	16 Bit	32 Bit
	MUM = 0, DSZ = 100	MUM = 0, DSZ = 101	MUM = 0, DSZ = 110	MUM = 0, DSZ = 111	MUM = 0, DSZ = 001	MUM = 0, DSZ = 010	MUM = 0, DSZ = 011	MUM = 1, DSZ = 001	MUM = 1, DSZ = 011
EIM_ADDR [15:00]	EIM_AD [15:00]	EIM_AD [15:00]	EIM_AD [15:00]	EIM_AD [15:00]	EIM_AD [15:00]	EIM_AD [15:00]	EIM_AD [15:00]	EIM_AD [15:00]	EIM_AD [15:00]
EIM_ADDR [25:16]	EIM_ADDR [25:16]	EIM_ADDR [25:16]	EIM_ADDR [25:16]	EIM_ADDR [25:16]	EIM_ADDR [25:16]	EIM_ADDR [25:16]	EIM_ADDR [25:16]	EIM_ADDR [25:16]	EIM_DATA [09:00]
EIM_DATA [07:00], EIM_EB0_B	EIM_DATA [07:00]	—	—	—	EIM_DATA [07:00]	—	EIM_DATA [07:00]	EIM_AD [07:00]	EIM_AD [07:00]
EIM_DATA [15:08], EIM_EB1_B	—	EIM_DATA [15:08]	—	—	EIM_DATA [15:08]	—	EIM_DATA [15:08]	EIM_AD [15:08]	EIM_AD [15:08]
EIM_DATA [23:16], EIM_EB2_B	—	—	EIM_DATA [23:16]	—	—	EIM_DATA [23:16]	EIM_DATA [23:16]	—	EIM_DATA [07:00]
EIM_DATA [31:24], EIM_EB3_B	—	—	—	EIM_DATA [31:24]	—	EIM_DATA [31:24]	EIM_DATA [31:24]	—	EIM_DATA [15:08]

[1] For more information on configuration ports mentioned in this table, see the i.MX 6DualPlus/6QuadPlus reference manual (IMX6DQPRM).

Table 40. EIM Bus Timing Parameters (continued)

ID	Parameter	Min[1]	Max[1]	Unit
WE4	Clock rise to address valid	-0.5 × t × (k+1) - 1.25	-0.5 × t × (k+1) + 2.25	ns
WE5	Clock rise to address invalid	0.5 × t × (k+1) - 1.25	0.5 × t × (k+1) + 2.25	ns
WE6	Clock rise to EIM_CSx_B valid	-0.5 × t × (k+1) - 1.25	-0.5 × t × (k+1) + 2.25	ns
WE7	Clock rise to EIM_CSx_B invalid	0.5 × t × (k+1) - 1.25	0.5 × t × (k+1) + 2.25	ns
WE8	Clock rise to EIM_WE_B valid	-0.5 × t × (k+1) - 1.25	-0.5 × t × (k+1) + 2.25	ns
WE9	Clock rise to EIM_WE_B invalid	0.5 × t × (k+1) - 1.25	0.5 × t × (k+1) + 2.25	ns
WE10	Clock rise to EIM_OE_B valid	-0.5 × t × (k+1) - 1.25	-0.5 × t × (k+1) + 2.25	ns
WE11	Clock rise to EIM_OE_B invalid	0.5 × t × (k+1) - 1.25	0.5 × t × (k+1) + 2.25	ns
WE12	Clock rise to EIM_EBx_B valid	-0.5 × t × (k+1) - 1.25	-0.5 × t × (k+1) + 2.25	ns
WE13	Clock rise to EIM_EBx_B invalid	0.5 × t × (k+1) - 1.25	0.5 × t × (k+1) + 2.25	ns
WE14	Clock rise to EIM_LBA_B valid	-0.5 × t × (k+1) - 1.25	-0.5 × t × (k+1) + 2.25	ns
WE15	Clock rise to EIM_LBA_B invalid	0.5 × t × (k+1) - 1.25	0.5 × t × (k+1) + 2.25	ns
WE16	Clock rise to output data valid	-0.5 × t × (k+1) - 1.25	-0.5 × t × (k+1) + 2.25	ns
WE17	Clock rise to output data invalid	0.5 × t × (k+1) - 1.25	0.5 × t × (k+1) + 2.25	ns
WE18	Input data setup time to clock rise	2.3	—	ns
WE19	Input data hold time from clock rise	2	—	ns
WE20	EIM_WAIT_B setup time to clock rise	2	—	ns
WE21	EIM_WAIT_B hold time from clock rise	2	—	ns

1 k represents register setting BCD value.

2 t is clock period (1/Freq). For 104 MHz, t = 9.165 ns.

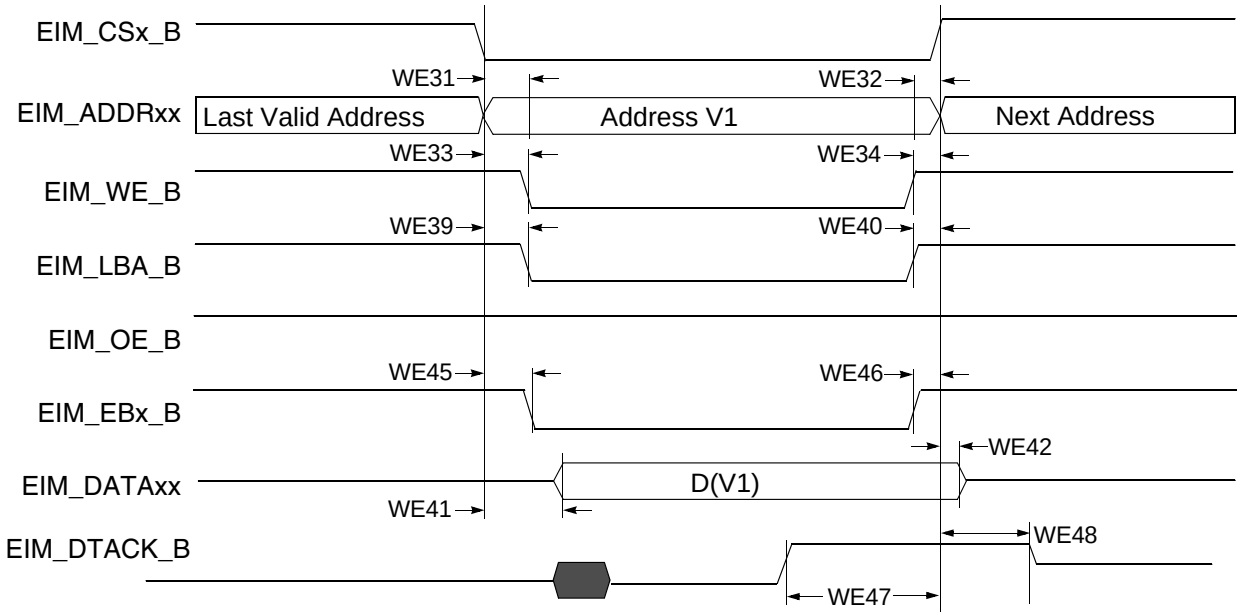

Figure 23. DTACK Mode Write Access (DAP=0)

Table 41. EIM Asynchronous Timing Parameters Relative to Chip Select[1, 2]

Ref No.	Parameter	Determination by Synchronous measured parameters	Min	Max	Unit
WE31	EIM_CSx_B valid to Address Valid	WE4-WE6-CSA×t	-3.5-CSA×t	3.5-CSA×t	ns
WE32	Address Invalid to EIM_CSx_B Invalid	WE7-WE5-CSN×t	-3.5-CSN×t	3.5-CSN×t	ns
WE32A (muxed A/D)	EIM_CSx_B valid to Address Invalid	t+WE4-WE7+ (ADVN+ADVA+1-CSA)×t	t - 3.5+(ADVN+ADVA+1-CSA)×t	t + 3.5+(ADVN+ADVA+ 1-CSA)×t	ns
WE33	EIM_CSx_B Valid to EIM_WE_B Valid	WE8-WE6+(WEA-WCSA)×t	-3.5+(WEA-WCSA)×t	3.5+(WEA-WCSA)×t	ns
WE34	EIM_WE_B Invalid to EIM_CSx_B Invalid	WE7-WE9+(WEN-WCSN)×t	-3.5+(WEN-WCSN)×t	3.5+(WEN-WCSN)×t	ns
WE35	EIM_CSx_B Valid to EIM_OE_B Valid	WE10- WE6+(OEA-RCSA)×t	-3.5+(OEA-RCSA)×t	3.5+(OEA-RCSA)×t	ns
WE35A (muxed A/D)	EIM_CSx_B Valid to EIM_OE_B Valid	WE10-WE6+(OEA+RADVN+RADVA+ADH+1-RCSA)×t	-3.5+(OEA+RADVN+RADVA+ADH+1-RCSA)×t	3.5+(OEA+RADVN+RADVA+ADH+1-RCSA)×t	ns
WE36	EIM_OE_B Invalid to EIM_CSx_B Invalid	WE7-WE11+(OEN-RCSN)×t	-3.5+(OEN-RCSN)×t	3.5+(OEN-RCSN)×t	ns
WE37	EIM_CSx_B Valid to EIM_EBx_B Valid (Read access)	WE12-WE6+(RBEA-RCSA)× t	-3.5+(RBEA- RCSA)×t	3.5+(RBEA - RCSA)×t	ns
WE38	EIM_EBx_B Invalid to EIM_CSx_B Invalid (Read access)	WE7-WE13+(RBEN-RCSN)×t	-3.5+ (RBEN-RCSN)×t	3.5+(RBEN-RCSN)×t	ns
WE39	EIM_CSx_B Valid to EIM_LBA_B Valid	WE14-WE6+(ADVA-CSA)×t	-3.5+ (ADVA-CSA)×t	3.5+(ADVA-CSA)×t	ns

[2] In this table:
- t means clock period from axi_clk frequency.
- CSA means register setting for WCSA when in write operations or RCSA when in read operations.
- CSN means register setting for WCSN when in write operations or RCSN when in read operations.
- ADVN means register setting for WADVN when in write operations or RADVN when in read operations.
- ADVA means register setting for WADVA when in write operations or RADVA when in read operations.

4.9.4 DDR SDRAM Specific Parameters (DDR3/DDR3L and LPDDR2)

4.9.4.1 DDR3/DDR3L Parameters

Figure 24 shows the DDR3/DDR3L basic timing diagram. The timing parameters for this diagram appear in Table 42.

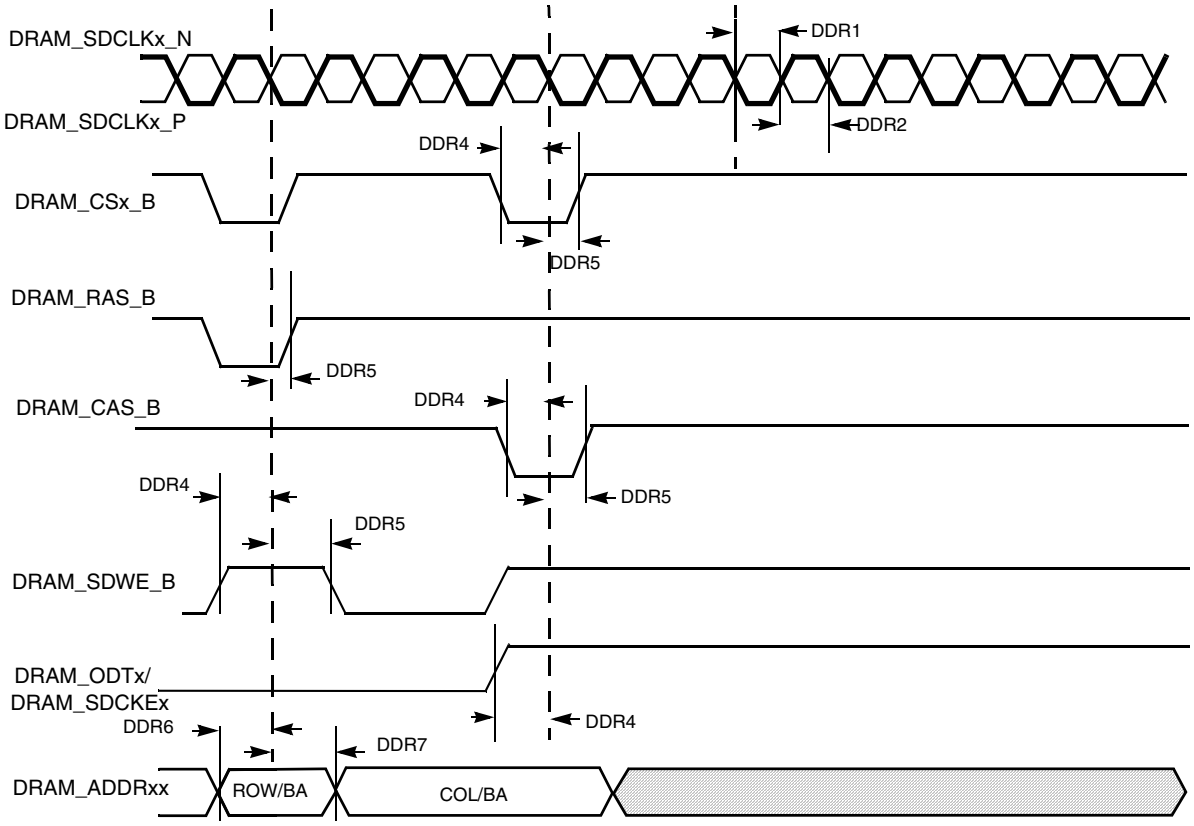

Figure 24. DDR3/DDR3L Command and Address Timing Diagram

Table 42. DDR3/DDR3L Command and Address Timing Parameter

ID	Parameter[1,2]	Symbol	CK = 532 MHz		Unit
			Min	Max	
DDR1	DRAM_SDCLKx_P clock high-level width	t_{CH}	0.47	0.53	t_{CK}
DDR2	DRAM_SDCLKx_P clock low-level width	t_{CL}	0.47	0.53	t_{CK}

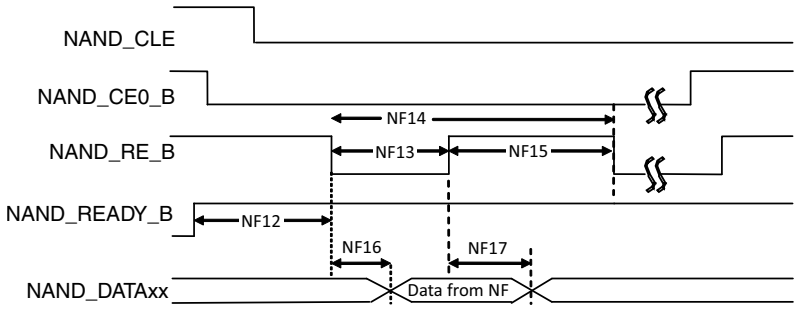

Figure 33. Read Data Latch Cycle Timing Diagram (Non-EDO Mode)

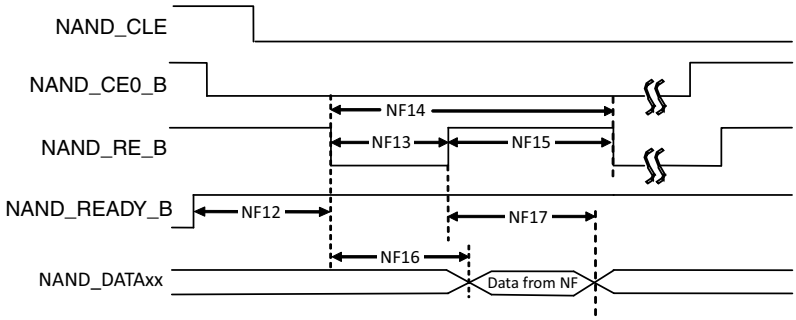

Figure 34. Read Data Latch Cycle Timing Diagram (EDO Mode)

Table 48. Asynchronous Mode Timing Parameters[1]

ID	Parameter	Symbol	Timing T = GPMI Clock Cycle		Unit
			Min	Max	
NF1	NAND_CLE setup time	tCLS	(AS + DS) × T - 0.12 [see [2,3]]		ns
NF2	NAND_CLE hold time	tCLH	DH × T - 0.72 [see [2]]		ns
NF3	NAND_CEx_B setup time	tCS	(AS + DS + 1) × T [see [3,2]]		ns
NF4	NAND_CEx_B hold time	tCH	(DH+1) × T - 1 [see [2]]		ns
NF5	NAND_WE_B pulse width	tWP	DS × T [see [2]]		ns
NF6	NAND_ALE setup time	tALS	(AS + DS) × T - 0.49 [see [3,2]]		ns
NF7	NAND_ALE hold time	tALH	(DH × T - 0.42 [see [2]]		ns
NF8	Data setup time	tDS	DS × T - 0.26 [see [2]]		ns
NF9	Data hold time	tDH	DH × T - 1.37 [see [2]]		ns
NF10	Write cycle time	tWC	(DS + DH) × T [see [2]]		ns
NF11	NAND_WE_B hold time	tWH	DH × T [see [2]]		ns
NF12	Ready to NAND_RE_B low	tRR[4]	(AS + 2) × T [see [3,2]]	—	ns
NF13	NAND_RE_B pulse width	tRP	DS × T [see [2]]		ns
NF14	READ cycle time	tRC	(DS + DH) × T [see [2]]		ns
NF15	NAND_RE_B high hold time	tREH	DH × T [see [2]]		ns

4.11.10.3 Electrical Characteristics

Figure 67 depicts the sensor interface timing. IPU2_CSIx_PIX_CLK signal described here is not generated by the IPU. Table 67 lists the sensor interface timing characteristics.

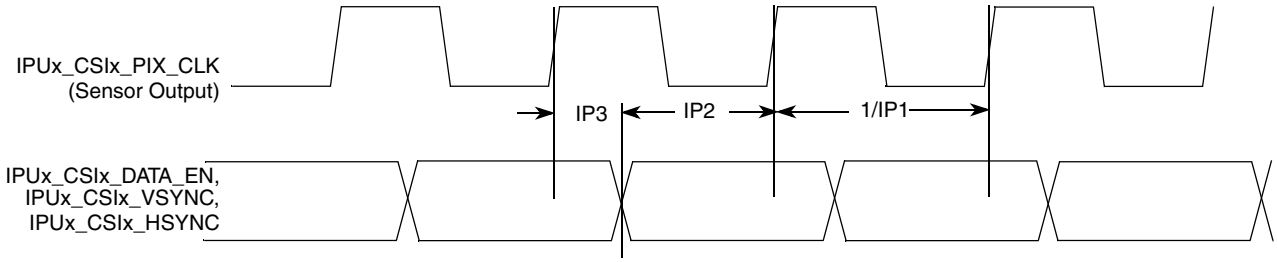

Figure 67. Sensor Interface Timing Diagram

Table 67. Sensor Interface Timing Characteristics

ID	Parameter	Symbol	Min	Max	Unit
IP1	Sensor output (pixel) clock frequency	Fpck	0.01	180	MHz
IP2	Data and control setup time	Tsu	2	—	ns
IP3	Data and control holdup time	Thd	1	—	ns
—	Vsync to Hsync	Tv-h	1/Fpck	—	ns
—	Vsync and Hsync pulse width	Tpulse	1/Fpck	—	ns
—	Vsync to first data	Tv-d	1/Fpck	—	ns

4.11.10.4 IPU Display Interface Signal Mapping

The IPU supports a number of display output video formats. Table 68 defines the mapping of the Display Interface Pins used during various supported video interface formats.

Table 68. Video Signal Cross-Reference

i.MX 6DualPlus/6QuadPlus	LCD							Comment[1,2]
Port Name (x = 0, 1)	RGB, Signal Name (General)	RGB/TV Signal Allocation (Example)						
		16-bit RGB	18-bit RGB	24 Bit RGB	8-bit YCrCb[3]	16-bit YCrCb	20-bit YCrCb	
IPUx_DISPx_DAT00	DAT[0]	B[0]	B[0]	B[0]	Y/C[0]	C[0]	C[0]	—
IPUx_DISPx_DAT01	DAT[1]	B[1]	B[1]	B[1]	Y/C[1]	C[1]	C[1]	—
IPUx_DISPx_DAT02	DAT[2]	B[2]	B[2]	B[2]	Y/C[2]	C[2]	C[2]	—
IPUx_DISPx_DAT03	DAT[3]	B[3]	B[3]	B[3]	Y/C[3]	C[3]	C[3]	—
IPUx_DISPx_DAT04	DAT[4]	B[4]	B[4]	B[4]	Y/C[4]	C[4]	C[4]	—

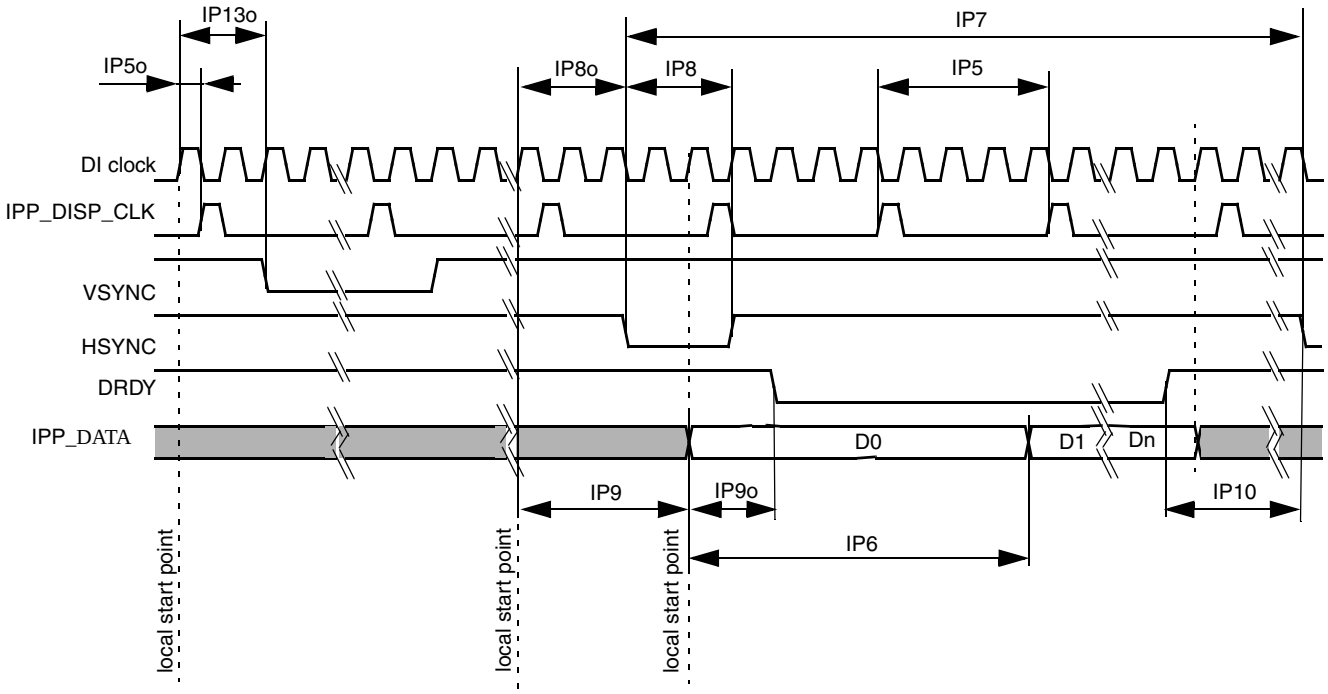

Figure 69. TFT Panels Timing Diagram—Horizontal Sync Pulse

Figure 70 depicts the vertical timing (timing of one frame). All parameters shown in the figure are programmable.

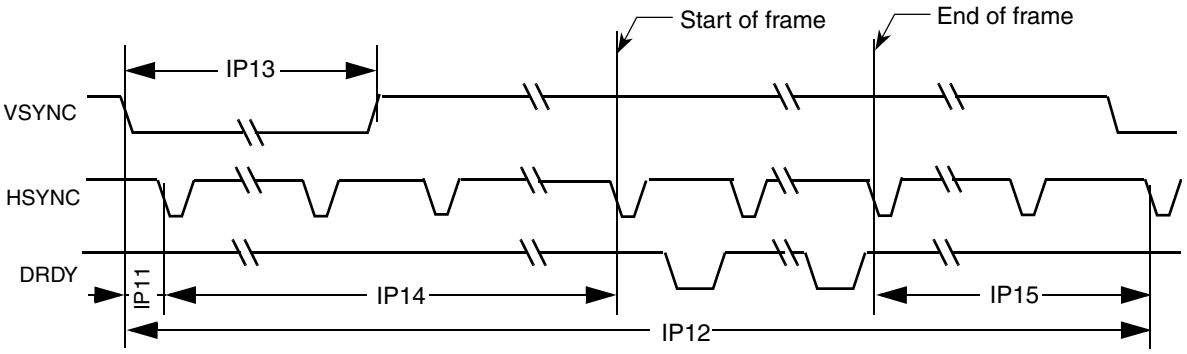

Figure 70. TFT Panels Timing Diagram—Vertical Sync Pulse

4.11.13.6 Frame Transmission Mode (Synchronized Data Flow)

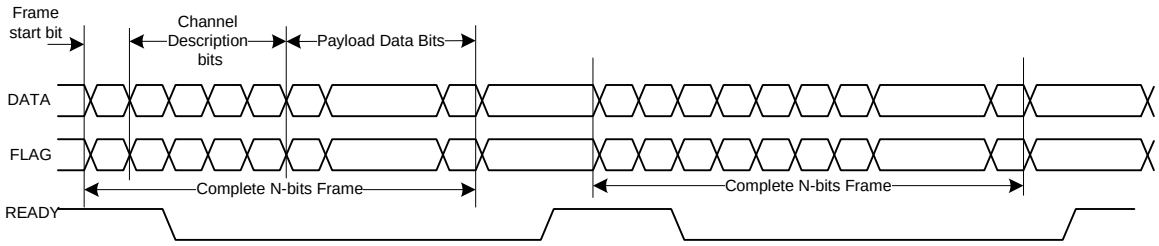

Figure 84. Frame Transmission Mode Transfer of Two Frames (Synchronized Data Flow)

4.11.13.7 Frame Transmission Mode (Pipelined Data Flow)

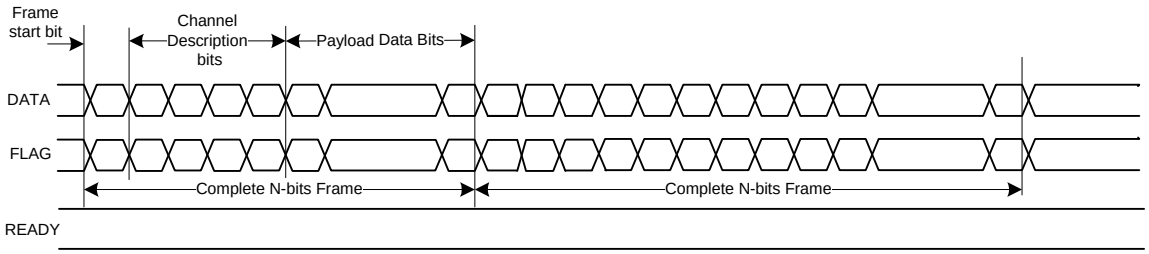

Figure 85. Frame Transmission Mode Transfer of Two Frames (Pipelined Data Flow)

4.11.13.8 DATA and FLAG Signal Timing Requirement for a 15 pF Load

Table 74. DATA and FLAG Timing

Parameter	Description	1 Mbit/s	100 Mbit/s
$t_{Bit, nom}$	Nominal bit time	1000 ns	10 ns
$t_{Rise, min}$ and $t_{Fall, min}$	Minimum allowed rise and fall time	2 ns	2 ns
$t_{TxToRxSkew, maxfq}$	Maximum skew between transmitter and receiver package pins	50 ns	0.5 ns
$t_{EageSepTx, min}$	Minimum allowed separation of signal transitions at transmitter package pins, including all timing defects, for example, jitter and skew, inside the transmitter.	400 ns	4 ns
$t_{EageSepRx, min}$	Minimum separation of signal transitions, measured at the receiver package pins, including all timing defects, for example, jitter and skew, inside the receiver.	350 ns	3.5 ns

Table 79. MLB 6-Pin Interface Timing Parameters

Parameter	Symbol	Min	Max	Unit	Comment
Cycle-to-cycle system jitter	t_{jitter}	—	600	ps	—
Transmitter MLB_SIG_P/_N (MLB_DATA_P/_N) output valid from transition of MLB_CLK_P/_N (low-to-high)[1]	t_{delay}	0.6	1.3	ns	—
Disable turnaround time from transition of MLB_CLK_P/_N (low-to-high)	t_{phz}	0.6	3.5	ns	—
Enable turnaround time from transition of MLB_CLK_P/_N (low-to-high)	t_{plz}	0.6	5.6	ns	—
MLB_SIG_P/_N (MLB_DATA_P/_N) valid to transition of MLB_CLK_P/_N (low-to-high)	t_{su}	0.05	—	ns	—
MLB_SIG_P/_N (MLB_DATA_P/_N) hold from transition of MLB_CLK_P/_N (low-to-high)[2]	t_{hd}	0.6	—	ns	—

[1] t_{delay}, t_{phz}, t_{plz}, t_{su}, and t_{hd} may also be referenced from a low-to-high transition of the recovered clock for 2:1 and 4:1 recovered-to-external clock ratios.

[2] The transmitting device must ensure valid data on MLB_SIG_P/_N (MLB_DATA_P/_N) for at least $t_{hd(min)}$ following the rising edge of MLBCP/N; receivers must latch MLB_SIG_P/_N (MLB_DATA_P/_N) data within $t_{hd(min)}$ of the rising edge of MLB_CLK_P/_N.

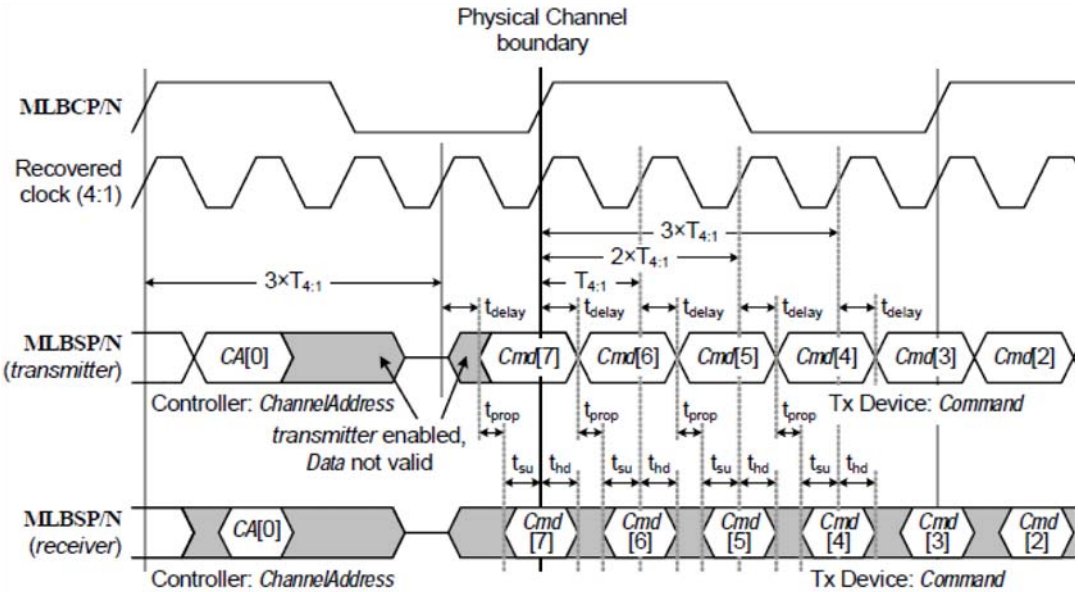

Figure 88. MLB 6-Pin Delay, Setup, and Hold Times

4.11.15 PCIe PHY Parameters

The PCIe interface complies with PCIe specification Gen2 x1 lane and supports the PCI Express 1.1/2.0 standard.

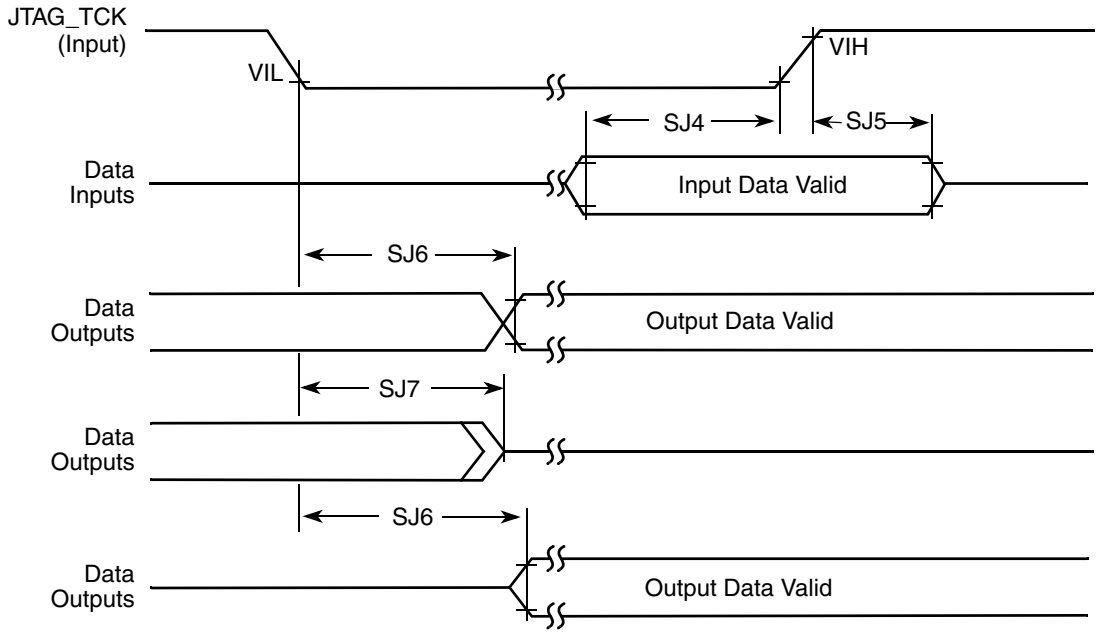

Figure 91. Boundary Scan (JTAG) Timing Diagram

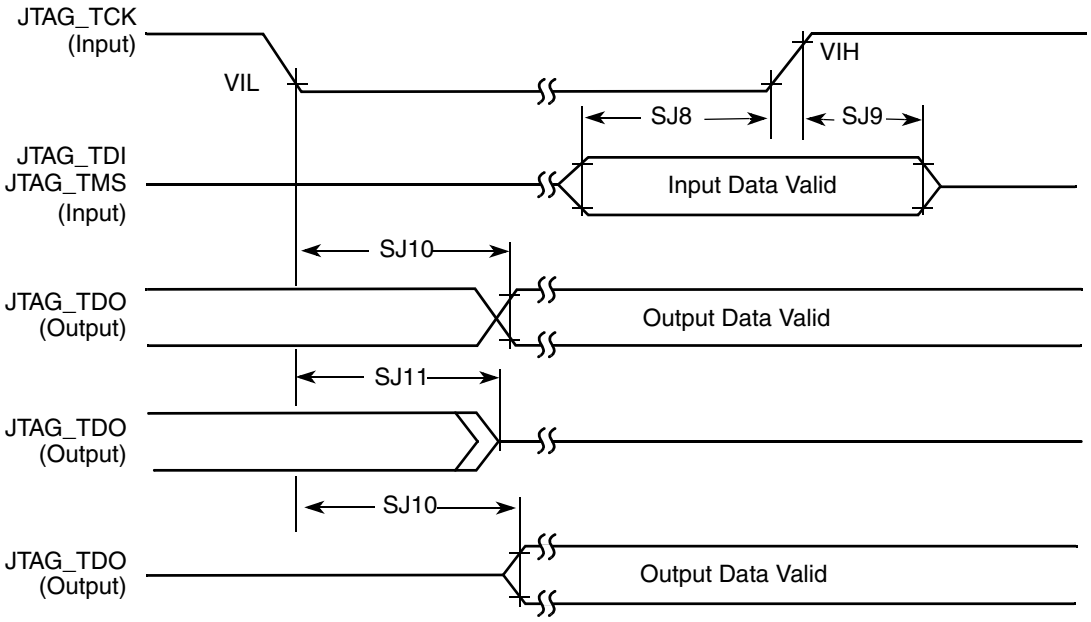

Figure 92. Test Access Port Timing Diagram

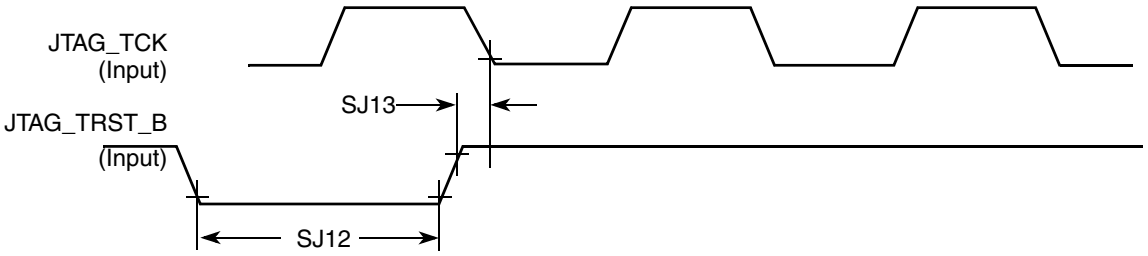

Figure 93. JTAG_TRST_B Timing Diagram

Table 83. JTAG Timing

ID	Parameter[1,2]	All Frequencies		Unit
		Min	Max	
SJ0	JTAG_TCK frequency of operation $1/(3xT_{DC})$[1]	0.001	22	MHz
SJ1	JTAG_TCK cycle time in crystal mode	45	—	ns
SJ2	JTAG_TCK clock pulse width measured at V_M[2]	22.5	—	ns
SJ3	JTAG_TCK rise and fall times	—	3	ns
SJ4	Boundary scan input data set-up time	5	—	ns
SJ5	Boundary scan input data hold time	24	—	ns
SJ6	JTAG_TCK low to output data valid	—	40	ns
SJ7	JTAG_TCK low to output high impedance	—	40	ns
SJ8	JTAG_TMS, JTAG_TDI data set-up time	5	—	ns
SJ9	JTAG_TMS, JTAG_TDI data hold time	25	—	ns
SJ10	JTAG_TCK low to JTAG_TDO data valid	—	44	ns
SJ11	JTAG_TCK low to JTAG_TDO high impedance	—	44	ns
SJ12	JTAG_TRST_B assert time	100	—	ns
SJ13	JTAG_TRST_B set-up time to JTAG_TCK low	40	—	ns

1 T_{DC} = target frequency of SJC
2 V_M = mid-point voltage

4.11.19 SPDIF Timing Parameters

The Sony/Philips Digital Interconnect Format (SPDIF) data is sent using the bi-phase marking code. When encoding, the SPDIF data signal is modulated by a clock that is twice the bit rate of the data signal.

Table 84 and Figure 94 and Figure 95 show SPDIF timing parameters for the Sony/Philips Digital Interconnect Format (SPDIF), including the timing of the modulating Rx clock (SPDIF_SR_CLK) for SPDIF in Rx mode and the timing of the modulating Tx clock (SPDIF_ST_CLK) for SPDIF in Tx mode.

Table 87. SSI Receiver Timing with Internal Clock (continued)

ID	Parameter	Min	Max	Unit
Oversampling Clock Operation				
SS47	Oversampling clock period	15.04	—	ns
SS48	Oversampling clock high period	6.0	—	ns
SS49	Oversampling clock rise time	—	3.0	ns
SS50	Oversampling clock low period	6.0	—	ns
SS51	Oversampling clock fall time	—	3.0	ns

NOTE

- All the timings for the SSI are given for a non-inverted serial clock polarity (TSCKP/RSCKP = 0) and a non-inverted frame sync (TFSI/RFSI = 0). If the polarity of the clock and/or the frame sync have been inverted, all the timing remains valid by inverting the clock signal AUDx_TXC/AUDx_RXC and/or the frame sync AUDx_TXFS/AUDx_RXFS shown in the tables and in the figures.
- All timings are on Audiomux Pads when SSI is being used for data transfer.
- AUDx_TXC and AUDx_RXC refer to the Transmit and Receive sections of the SSI.
- The terms, WL and BL, refer to Word Length (WL) and Bit Length(BL).
- For internal Frame Sync operation using external clock, the frame sync timing is same as that of transmit data (for example, during AC97 mode of operation).

Table 100. 21 x 21 mm Functional Contact Assignments (continued)

Ball Name	Ball	Power Group	Ball Type	Out of Reset Condition[1]			
				Default Mode (Reset Mode)	Default Function (Signal Name)	Input/Output	Value[2]
DRAM_D11	AE7	NVCC_DRAM	DDR	ALT0	DRAM_DATA11	Input	PU (100K)
DRAM_D12	AB5	NVCC_DRAM	DDR	ALT0	DRAM_DATA12	Input	PU (100K)
DRAM_D13	AC5	NVCC_DRAM	DDR	ALT0	DRAM_DATA13	Input	PU (100K)
DRAM_D14	AB6	NVCC_DRAM	DDR	ALT0	DRAM_DATA14	Input	PU (100K)
DRAM_D15	AC7	NVCC_DRAM	DDR	ALT0	DRAM_DATA15	Input	PU (100K)
DRAM_D16	AB7	NVCC_DRAM	DDR	ALT0	DRAM_DATA16	Input	PU (100K)
DRAM_D17	AA8	NVCC_DRAM	DDR	ALT0	DRAM_DATA17	Input	PU (100K)
DRAM_D18	AB9	NVCC_DRAM	DDR	ALT0	DRAM_DATA18	Input	PU (100K)
DRAM_D19	Y9	NVCC_DRAM	DDR	ALT0	DRAM_DATA19	Input	PU (100K)
DRAM_D2	AC4	NVCC_DRAM	DDR	ALT0	DRAM_DATA02	Input	PU (100K)
DRAM_D20	Y7	NVCC_DRAM	DDR	ALT0	DRAM_DATA20	Input	PU (100K)
DRAM_D21	Y8	NVCC_DRAM	DDR	ALT0	DRAM_DATA21	Input	PU (100K)
DRAM_D22	AC8	NVCC_DRAM	DDR	ALT0	DRAM_DATA22	Input	PU (100K)
DRAM_D23	AA9	NVCC_DRAM	DDR	ALT0	DRAM_DATA23	Input	PU (100K)
DRAM_D24	AE9	NVCC_DRAM	DDR	ALT0	DRAM_DATA24	Input	PU (100K)
DRAM_D25	Y10	NVCC_DRAM	DDR	ALT0	DRAM_DATA25	Input	PU (100K)
DRAM_D26	AE11	NVCC_DRAM	DDR	ALT0	DRAM_DATA26	Input	PU (100K)
DRAM_D27	AB11	NVCC_DRAM	DDR	ALT0	DRAM_DATA27	Input	PU (100K)
DRAM_D28	AC9	NVCC_DRAM	DDR	ALT0	DRAM_DATA28	Input	PU (100K)
DRAM_D29	AD9	NVCC_DRAM	DDR	ALT0	DRAM_DATA29	Input	PU (100K)
DRAM_D3	AA5	NVCC_DRAM	DDR	ALT0	DRAM_DATA03	Input	PU (100K)
DRAM_D30	AD11	NVCC_DRAM	DDR	ALT0	DRAM_DATA30	Input	PU (100K)
DRAM_D31	AC11	NVCC_DRAM	DDR	ALT0	DRAM_DATA31	Input	PU (100K)
DRAM_D32	AA17	NVCC_DRAM	DDR	ALT0	DRAM_DATA32	Input	PU (100K)
DRAM_D33	AA18	NVCC_DRAM	DDR	ALT0	DRAM_DATA33	Input	PU (100K)
DRAM_D34	AC18	NVCC_DRAM	DDR	ALT0	DRAM_DATA34	Input	PU (100K)
DRAM_D35	AE19	NVCC_DRAM	DDR	ALT0	DRAM_DATA35	Input	PU (100K)
DRAM_D36	Y17	NVCC_DRAM	DDR	ALT0	DRAM_DATA36	Input	PU (100K)
DRAM_D37	Y18	NVCC_DRAM	DDR	ALT0	DRAM_DATA37	Input	PU (100K)
DRAM_D38	AB19	NVCC_DRAM	DDR	ALT0	DRAM_DATA38	Input	PU (100K)
DRAM_D39	AC19	NVCC_DRAM	DDR	ALT0	DRAM_DATA39	Input	PU (100K)
DRAM_D4	AC1	NVCC_DRAM	DDR	ALT0	DRAM_DATA04	Input	PU (100K)
DRAM_D40	Y19	NVCC_DRAM	DDR	ALT0	DRAM_DATA40	Input	PU (100K)
DRAM_D41	AB20	NVCC_DRAM	DDR	ALT0	DRAM_DATA41	Input	PU (100K)
DRAM_D42	AB21	NVCC_DRAM	DDR	ALT0	DRAM_DATA42	Input	PU (100K)
DRAM_D43	AD21	NVCC_DRAM	DDR	ALT0	DRAM_DATA43	Input	PU (100K)

Table 100. 21 x 21 mm Functional Contact Assignments (continued)

Ball Name	Ball	Power Group	Ball Type	Out of Reset Condition[1]			
				Default Mode (Reset Mode)	Default Function (Signal Name)	Input/Output	Value[2]
GPIO_8	R5	NVCC_GPIO	GPIO	ALT5	GPIO1_IO08	Input	PU (100K)
GPIO_9	T2	NVCC_GPIO	GPIO	ALT5	GPIO1_IO09	Input	PU (100K)
HDMI_CLKM	J5	HDMI_VPH	—	—	HDMI_TX_CLK_N	—	—
HDMI_CLKP	J6	HDMI_VPH	—	—	HDMI_TX_CLK_P	—	—
HDMI_D0M	K5	HDMI_VPH	—	—	HDMI_TX_DATA0_N	—	—
HDMI_D0P	K6	HDMI_VPH	—	—	HDMI_TX_DATA0_P	—	—
HDMI_D1M	J3	HDMI_VPH	—	—	HDMI_TX_DATA1_N	—	—
HDMI_D1P	J4	HDMI_VPH	—	—	HDMI_TX_DATA1_P	—	—
HDMI_D2M	K3	HDMI_VPH	—	—	HDMI_TX_DATA2_N	—	—
HDMI_D2P	K4	HDMI_VPH	—	—	HDMI_TX_DATA2_P	—	—
HDMI_HPD	K1	HDMI_VPH	—	—	HDMI_TX_HPD	—	—
JTAG_MOD	H6	NVCC_JTAG	GPIO	ALT0	JTAG_MODE	Input	PU (100K)
JTAG_TCK	H5	NVCC_JTAG	GPIO	ALT0	JTAG_TCK	Input	PU (47K)
JTAG_TDI	G5	NVCC_JTAG	GPIO	ALT0	JTAG_TDI	Input	PU (47K)
JTAG_TDO	G6	NVCC_JTAG	GPIO	ALT0	JTAG_TDO	Output	Keeper
JTAG_TMS	C3	NVCC_JTAG	GPIO	ALT0	JTAG_TMS	Input	PU (47K)
JTAG_TRSTB	C2	NVCC_JTAG	GPIO	ALT0	JTAG_TRST_B	Input	PU (47K)
KEY_COL0	W5	NVCC_GPIO	GPIO	ALT5	GPIO4_IO06	Input	PU (100K)
KEY_COL1	U7	NVCC_GPIO	GPIO	ALT5	GPIO4_IO08	Input	PU (100K)
KEY_COL2	W6	NVCC_GPIO	GPIO	ALT5	GPIO4_IO10	Input	PU (100K)
KEY_COL3	U5	NVCC_GPIO	GPIO	ALT5	GPIO4_IO12	Input	PU (100K)
KEY_COL4	T6	NVCC_GPIO	GPIO	ALT5	GPIO4_IO14	Input	PU (100K)
KEY_ROW0	V6	NVCC_GPIO	GPIO	ALT5	GPIO4_IO07	Input	PU (100K)
KEY_ROW1	U6	NVCC_GPIO	GPIO	ALT5	GPIO4_IO09	Input	PU (100K)
KEY_ROW2	W4	NVCC_GPIO	GPIO	ALT5	GPIO4_IO11	Input	PU (100K)
KEY_ROW3	T7	NVCC_GPIO	GPIO	ALT5	GPIO4_IO13	Input	PU (100K)
KEY_ROW4	V5	NVCC_GPIO	GPIO	ALT5	GPIO4_IO15	Input	PD (100K)
LVDS0_CLK_N	V4	NVCC_LVDS_2P5	LVDS	—	LVDS0_CLK_N	—	—
LVDS0_CLK_P	V3	NVCC_LVDS_2P5	LVDS	ALT0	LVDS0_CLK_P	Input	Keeper
LVDS0_TX0_N	U2	NVCC_LVDS_2P5	LVDS	—	LVDS0_TX0_N	—	—
LVDS0_TX0_P	U1	NVCC_LVDS_2P5	LVDS	ALT0	LVDS0_TX0_P	Input	Keeper
LVDS0_TX1_N	U4	NVCC_LVDS_2P5	LVDS	—	LVDS0_TX1_N	—	—
LVDS0_TX1_P	U3	NVCC_LVDS_2P5	LVDS	ALT0	LVDS0_TX1_P	Input	Keeper
LVDS0_TX2_N	V2	NVCC_LVDS_2P5	LVDS	—	LVDS0_TX2_N	—	—
LVDS0_TX2_P	V1	NVCC_LVDS_2P5	LVDS	ALT0	LVDS0_TX2_P	Input	Keeper
LVDS0_TX3_N	W2	NVCC_LVDS_2P5	LVDS	—	LVDS0_TX3_N	—	—