Zilog - Z8PE003PZ010EG Datasheet

Welcome to E-XFL.COM

What is "Embedded - Microcontrollers"?

"Embedded - Microcontrollers" refer to small, integrated circuits designed to perform specific tasks within larger systems. These microcontrollers are essentially compact computers on a single chip, containing a processor core, memory, and programmable input/output peripherals. They are called "embedded" because they are embedded within electronic devices to control various functions, rather than serving as standalone computers. Microcontrollers are crucial in modern electronics, providing the intelligence and control needed for a wide range of applications.

Applications of "Embedded - Microcontrollers"

Details	
Product Status	Obsolete
Core Processor	Z8
Core Size	8-Bit
Speed	10MHz
Connectivity	-
Peripherals	Brown-out Detect/Reset, POR, PWM, WDT
Number of I/O	14
Program Memory Size	1KB (1K x 8)
Program Memory Type	OTP
EEPROM Size	-
RAM Size	64 x 8
Voltage - Supply (Vcc/Vdd)	4.5V ~ 5.5V
Data Converters	-
Oscillator Type	Internal
Operating Temperature	-40°C ~ 105°C (TA)
Mounting Type	Through Hole
Package / Case	18-DIP (0.300", 7.62mm)
Supplier Device Package	-
Purchase URL	https://www.e-xfl.com/product-detail/zilog/z8pe003pz010eg

DC ELECTRICAL CHARACTERISTICS (Continued)

Table 6. DC Electrical Characteristics

Sym	Parameter	V_{CC}[1]	T_A = —40…C to +105…C Extended Temperatures Min	Max	Typical[2] @ 25¡C	Units	Conditions	Notes
V_{CH}	Clock Input High Voltage	4.5V	0.7 V_{CC}	V_{CC}+0.3	2.5	V	Driven by External Clock Generator	
		5.5V	0.7 V_{CC}	V_{CC}+0.3	2.5	V	Driven by External Clock Generator	
V_{CL}	Clock Input Low Voltage	4.5V	V_{SS}–0.3	0.2 V_{CC}	1.5	V	Driven by External Clock Generator	
		5.5V	V_{SS}–0.3	0.2 V_{CC}	1.5	V	Driven by External Clock Generator	
V_{IH}	Input High Voltage	4.5V	0.7 V_{CC}	V_{CC}+0.3	2.5	V		
		5.5V	0.7 V_{CC}	V_{CC}+0.3	2.5	V		
V_{IL}	Input Low Voltage	4.5V	V_{SS}–0.3	0.2 V_{CC}	1.5	V		
		5.5V	V_{SS}–0.3	0.2 V_{CC}	1.5	V		
V_{OH}	Output High Voltage	4.5V	V_{CC}–0.4		4.8	V	I_{OH} = –2.0 mA	
		5.5V	V_{CC}–0.4		4.8	V	I_{OH} = –2.0 mA	
V_{OL1}	Output Low Voltage	4.5V		0.4	0.1	V	I_{OL} = +4.0 mA	
		5.5V		0.4	0.1	V	I_{OL} = +4.0 mA	
V_{OL2}	Output Low Voltage	4.5V		1.2	0.5	V	I_{OL} = +12 mA	
		5.5V		1.2	0.5	V	I_{OL} = +12 mA	
V_{OFFSET}	Comparator Input Offset Voltage	4.5V		25.0	10.0	mV		
		5.5V		25.0	10.0	mV		
I_{IL}	Input Leakage	4.5V	–1.0	2.0	<1.0	µA	V_{IN} = 0V, V_{CC}	
		5.5V	–1.0	2.0	<1.0	µA	V_{IN} = 0V, V_{CC}	
I_{OL}	Output Leakage	4.5V	–1.0	2.0	<1.0	µA	V_{IN} = 0V, V_{CC}	
		5.5V	–1.0	2.0	<1.0	µA	V_{IN} = 0V, V_{CC}	
V_{ICR}	Comparator Input Common Mode Voltage Range	4.5V	0	V_{CC} –1.5V		V		3
		5.5V	0	V_{CC} –1.5V		V		3
R_{PB5}	PB5 Pull-up Resistor	4.5V	100		200	kOhm		4
		5.5V	100		200			
V_{LV}	V_{CC} Low-Voltage Protection		2.45	2.85	2.60	V		
I_{CC}	Supply Current	4.5V		7.0	4.0	mA	@ 10 MHz	5,6
		5.5V		7.0	4.0	mA	@ 10 MHz	5,6

Notes:

Table 6. DC Electrical Characteristics (Continued)

Sym	Parameter	V_{CC}[1]	T_A = —40…C to +105…C Extended Temperatures Min	Max	Typical[2] @ 25¡C	Units	Conditions	Notes
I_{CC1}	Standby Current	4.5V		2.0	1.0	mA	HALT mode V_{IN} = 0V, V_{CC} @ 10 MHz	5,6
		5.5V		2.0	1.0	mA	HALT mode V_{IN} = 0V, V_{CC} @ 10 MHz	5,6
I_{CC2}	Standby Current	4.5V		700	250	nA	STOP mode V_{IN} = 0V,V_{CC}	7
		5.5V		700	250	nA	STOP mode V_{IN} = 0V,V_{CC}	7

Notes:
1. The V_{CC} voltage specification of 4.5V and 5.5V guarantees 5.0V ±0.5V.
2. Typical values are measured at V_{CC} = 5.0V; V_{SS} = 0V = GND.
3. For analog comparator input when analog comparator is enabled.
4. No protection diode is provided from the pin to V_{CC}. External protection is recommended.
5. All outputs are unloaded and all inputs are at V_{CC} or V_{SS} level.
6. CL1 = CL2 = 22 pF.
7. Same as note 5, except inputs are at V_{CC}.

AC ELECTRICAL CHARACTERISTICS

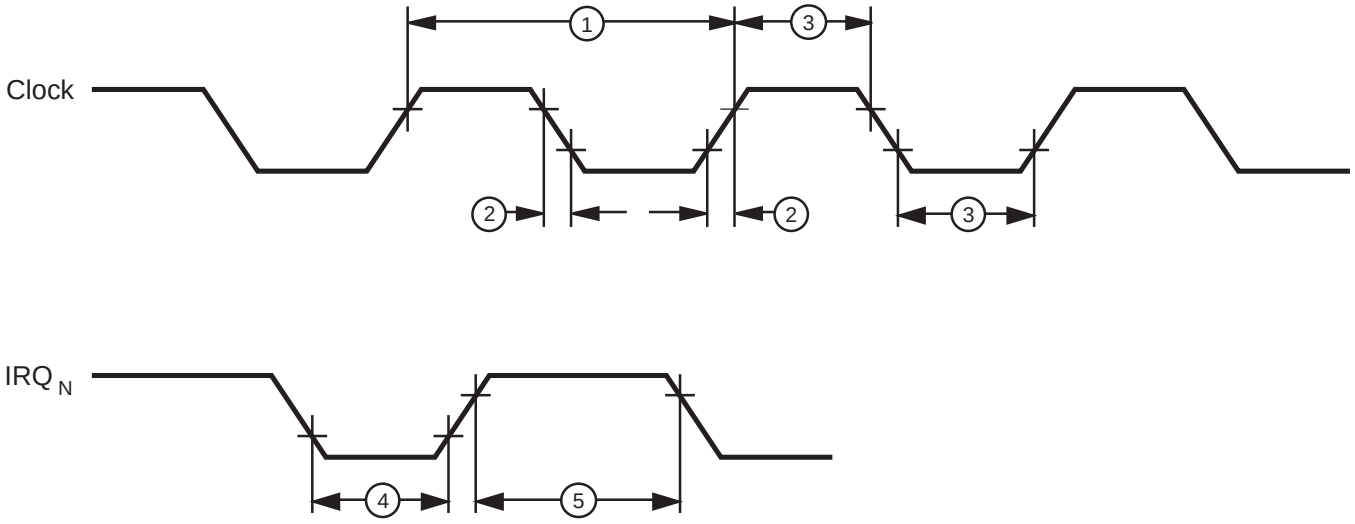

Figure 8. AC Electrical Timing Diagram

Table 7. Additional Timing

				T_A = 0…C to +70…C T_A = —40…C to +105…C @ 10 MHz			
No	Symbol	Parameter	V_{CC}[1]	Min	Max	Units	Notes
1	T_PC	Input Clock Period	3.0V	100	DC	ns	2
			5.5V	100	DC	ns	2
2	T_RC,T_FC	Clock Input Rise and Fall Times	3.0V		15	ns	2
			5.5V		15	ns	2
3	T_WC	Input Clock Width	3.0V	50		ns	2
			5.5V	50		ns	2
4	T_WIL	Int. Request Input Low Time	3.0V	70		ns	2
			5.5V	70		ns	2
5	T_WIH	Int. Request Input High Time	3.0V	5TpC			2
			5.5V	5TpC			2
6	T_{WSM}	STOP mode Recovery Width Spec.	3.0V	25		ns	
			5.5V	25		ns	
7	T_{OST}	Oscillator Start-Up Time	3.0V		5TpC		
			5.5V		5TpC		
8	T_{POR}	Power-On Reset Time	3.0V	128 $T_PC + T_{OST}$			
			5.5V				

Notes:
1. The V_{DD} voltage specification of 3.0V guarantees 3.0V. The V_{DD} voltage specification of 5.5V guarantees 5.0V ±0.5V.
2. Timing Reference uses 0.7 V_{CC} for a logical 1 and 0.2 V_{CC} for a logical 0.

RESET (Continued)

Table 8. Control and Peripheral Registers* (Continued)

		Bits								
Register (HEX)	Register Name	7	6	5	4	3	2	1	0	Comments
D4	Port B Input	U	U	U	U	U	U	U	U	Current sample of the input pin following $\overline{\text{RESET}}$.
D3	Port A Special Function	0	0	0	0	0	0	0	0	Deactivates all port special functions after $\overline{\text{RESET}}$.
D2	Port A Directional Control	0	0	0	0	0	0	0	0	Defines all bits as inputs in PortA after $\overline{\text{RESET}}$.
D1	Port A Output	U	U	U	U	U	U	U	U	Output register not affected by $\overline{\text{RESET}}$
D0	Port A Input	U	U	U	U	U	U	U	U	Current sample of the input pin following $\overline{\text{RESET}}$.
CF	Reserved									
CE	Reserved									
CD	T1VAL	U	U	U	U	U	U	U	U	
CC	T0VAL	U	U	U	U	U	U	U	U	
CB	T3VAL	U	U	U	U	U	U	U	U	
CA	T2VAL	U	U	U	U	U	U	U	U	
C9	T3AR	U	U	U	U	U	U	U	U	
C8	T2AR	U	U	U	U	U	U	U	U	
C7	T1ARHI	U	U	U	U	U	U	U	U	
C6	T0ARHI	U	U	U	U	U	U	U	U	
C5	T1ARLO	U	U	U	U	U	U	U	U	
C4	T0ARLO	U	U	U	U	U	U	U	U	
C3	WDTHI	1	1	1	1	1	1	1	1	
C2	WDTLO	1	1	1	1	1	1	1	1	
C1	TCTLHI	1	1	1	1	1	0	0	0	WDT enabled in HALT mode, WDT time-out at maximum value, STOP mode disabled.
C0	TCTLLO	0	0	0	0	0	0	0	0	All standard timers are disabled.

Note: *The SMR and WDT flags are set to indicate the source of the $\overline{\text{RESET}}$.

Table 9. Flag Register Bit D1, D0

D1	D0	Reset Source
0	0	V_{BO}/POR
0	1	SMR Recovery
1	0	WDT Reset
1	1	Reserved

INTERRUPT SOURCES

Table 10 presents the interrupt types, sources, and vectors available in the Z8Plus. Other processors from the Z8Plus family may define the interrupts differently.

Table 10. Interrupt Types, Sources, and Vectors

Name	Sources	Vector Location	Comments	Fixed Priority
$IREQ_0$	Timer0 Time-out	2,3	Internal	1 (Highest)
$IREQ_1$	PB4 High-to-Low Transition	4,5	External (PB4), Edge Triggered	2
$IREQ_2$	Timer1 Time-out	6,7	Internal	3
$IREQ_3$	PB2 High-to-Low Transition	8,9	External (PB2), Edge Triggered	4
$IREQ_4$	PB4 Low-to-High Transition	A,B	External (PB4), Edge Triggered	5
$IREQ_5$	Timer2 Time-out	C,D	Internal	6 (Lowest)
$IREQ_6$–$IREQ_{15}$	Reserved		Reserved for future expansion	

External Interrupt Sources

External sources can be generated by a transition on the corresponding Port pin. The interrupt may detect a rising edge, a falling edge, or both.

Notes: The interrupt sources and trigger conditions are device dependent. See the device product specification to determine available sources (internal and external), triggering edge options, and exact programming details.

Although interrupts are edge triggered, minimum interrupt request Low and High times must be observed for proper operation. See the device product specification for exact timing requirements on external interrupt requests (T_WIL, T_WIH).

Internal Interrupt Sources

Internal interrupt sources and trigger conditions are device dependent. On-chip peripherals may set interrupt under various conditions. Some peripherals always set their corresponding IREQ bit while others must be specifically configured to do so.

See the device product specification to determine available sources, triggering edge options, and exact programming details. For more details on the interrupt sources, refer to the chapters describing the timers, comparators, I/O ports, and other peripherals.

Interrupt Mask Register (IMASK) Initialization

The IMASK register individually or globally enables or disables the interrupts (Table 11). When bits 0 through 5 are set to 1, the corresponding interrupt requests are enabled. Bit 7 is the master enable bit and must be set before any of the individual interrupt requests can be recognized. Resetting bit 7 disables all the interrupt requests. Bit 7 is set and reset by the EI and DI instructions. It is automatically set to 0 during an interrupt service routine and set to 1 following the execution of an Interrupt Return (IRET) instruction. The IMASK registers are reset to 00h, disabling all interrupts.

Notes: It is not good programming practice to directly assign a value to the master enable bit. A value change should always be accomplished by issuing the EI and DI instructions.

Care should be taken not to set or clear IMASK bits while the master enable is set.

Table 11. Interrupt Mask Register—IMASK (FBh)

Bit	7	6	5	4	3	2	1	0
R/W	R/W	R/W	R/W	R/W	R/W	R/W	R/W	R/W
Reset	0	0	0	0	0	0	0	0
R = Read W = Write X = Indeterminate U = Undefined/ Undetermined								

Bit Position	R/W	Value	Description
7		0 1	Disables Interrupts Enables Interrupts
6		0	Reserved, must be 0
5		0 1	Disables IRQ5 Enables IRQ5
4		0 1	Disables IRQ4 Enables IRQ4
3		0 1	Disables IRQ3 Enables IRQ3
2		0 1	Disables IRQ2 Enables IRQ2
1		0 1	Disables IRQ1 Enables IRQ1
0		0 1	Disables IRQ0 Enables IRQ0

Interrupt Request (IREQ) Register Initialization

IREQ (Table 12) is a register that stores the interrupt requests for both vectored and polled interrupts. When an interrupt is issued, the corresponding bit position in the register is set to 1. Bits 0 to 5 are assigned to interrupt requests IREQ0 to IREQ5, respectively.

Whenever RESET is executed, the IREQ resistor is set to 00h.

Table 12. Interrupt Request Register—IREQ (FAh)

Bit	7	6	5	4	3	2	1	0
R/W	R/W	R/W	R/W	R/W	R/W	R/W	R/W	R/W
Reset	0	0	0	0	0	0	0	0
R = Read W = Write X = Indeterminate U = Undefined/ Undetermined								

Bit Position	R/W	Value	Description
7	R/W	0	Reserved, must be 0
6	R/W	0	Reserved, must be 0
5	R/W	0 1	IRQ5 reset IRQ5 set
4	R/W	0 1	IRQ4 reset IRQ4 set
3	R/W	0 1	IRQ3 reset IRQ3 set
2	R/W	0 1	IRQ2 reset IRQ2 set
1	R/W	0 1	IRQ1 reset IRQ1 set
0	R/W	0 1	IRQ0 reset IRQ0 set

OSCILLATOR OPERATION (Continued)

Circuit Board Design Rules

The following circuit board design rules are suggested:

- To prevent induced noise, the crystal and load capacitors should be physically located as close to the Z8Plus as possible.
- Signal lines should not run parallel to the clock oscillator inputs. In particular, the crystal input circuitry and the internal system clock output should be separated as much as possible.
- V_{CC} power lines should be separated from the clock oscillator input circuitry.
- Resistivity between XTAL1 or XTAL2 (and the other pins) should be greater than 10 meg-Ohms.

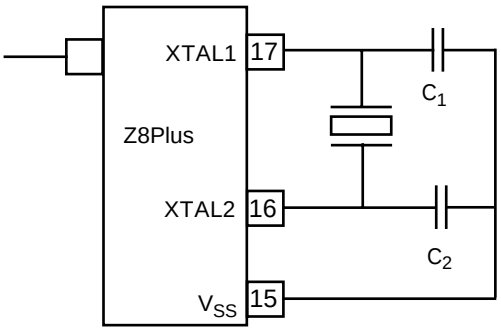

Clock Generator Circuit

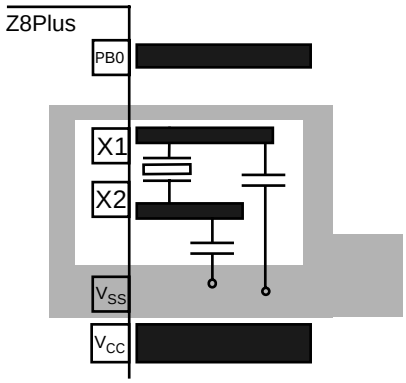

Board Design Example
(Top View)

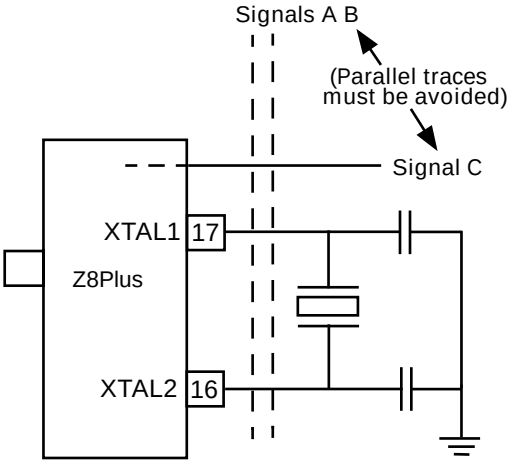

Figure 15. Circuit Board Design Rules

Crystals and Resonators

Crystals and ceramic resonators (Figure 16) should exhibit the following characteristics to ensure proper oscillation:

Crystal Cut	AT (crystal only)
Mode	Parallel, fundamental mode
Crystal Capacitance	<7pF
Load Capacitance	10pF < CL < 220 pF,
	15 typical
Resistance	100 Ohms maximum

Depending on the operation frequency, the oscillator may require additional capacitors C_1 and C_2, as illustrated in Figure 16 and Figure 17. The capacitance values are dependent on the manufacturerÕs crystal specifications.

LC OSCILLATOR

The Z8Plus oscillator can use an inductor capacitor oscillator (LC) network to generate an XTAL clock (Figure 17).

The frequency stays stable over V_{CC} and temperature. The oscillation frequency is determined by the equation:

$$\text{Frequency} = \frac{1}{2\pi\,(LC_T)^{1/2}}$$

where L is the total inductance including parasitics, and C_T is the total series capacitance including parasitics.

Simple series capacitance is calculated using the equation at the top of the next column.

$$1/C_T = 1/C_1 + 1/C_2$$

$$\text{If } C_1 = C_2$$

$$1/C_T = 2/C_1$$

$$C_1 = 2C_T$$

A sample calculation of capacitance C_1 and C_2 for 5.83-MHz frequency and inductance value of 27 µH is displayed as follows:

$$5.83\,(10\text{^}6) = \frac{1}{2\pi\,[27\,(10^{-6})\,C_T]^{1/2}}$$

$$C_T = 27.6 \text{ pF}$$

Thus, C_1 = 55.2 pF and C_2 = 55.2 pF.

TIMERS

Two 8-bit timers, timer 0 (T0) and timer 1 (T1) are available to function as a pair of independent 8-bit standard timers. They may also be cascaded to function as a 16-bit Pulse Width Modulator (PWM) timer. Two additional 8-bit timers (T2 and T3) are provided, but they can only operate as one 16-bit standard timer.

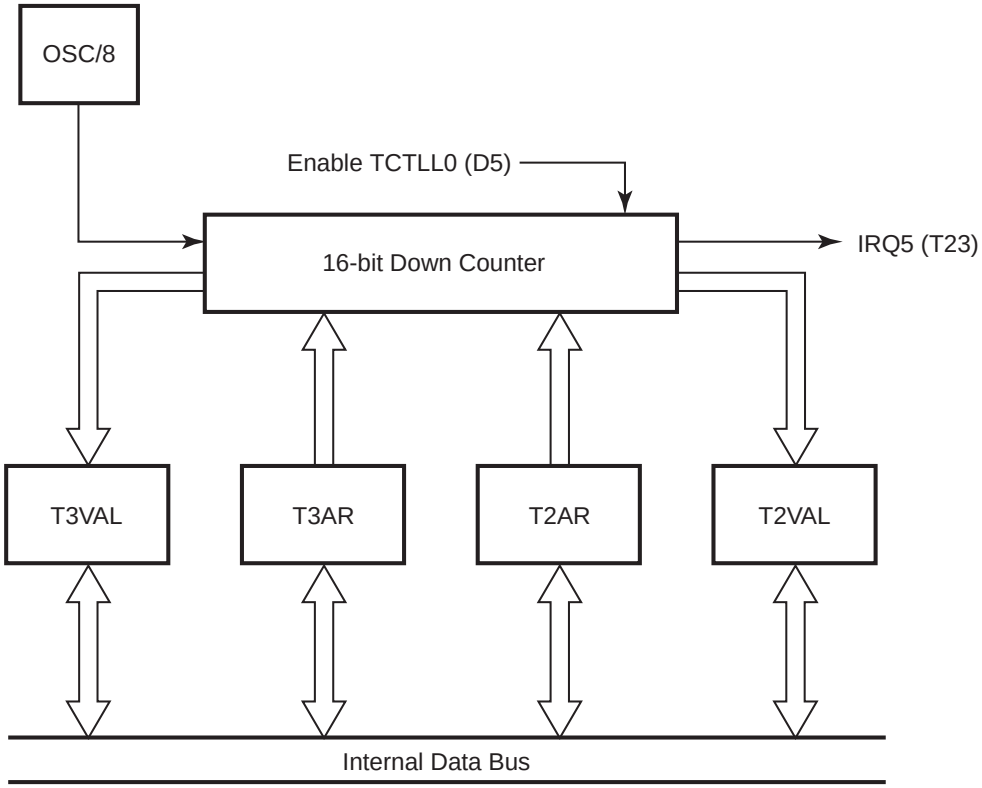

Figure 19. 16-Bit Standard Timer

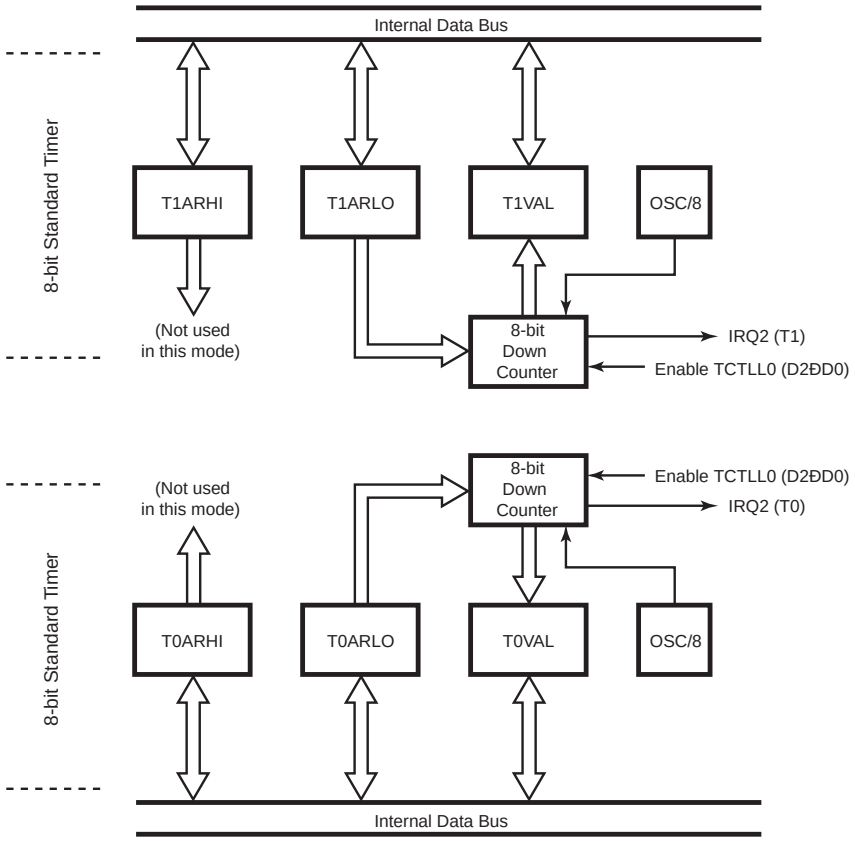

Figure 20. 8-Bit Standard Timers

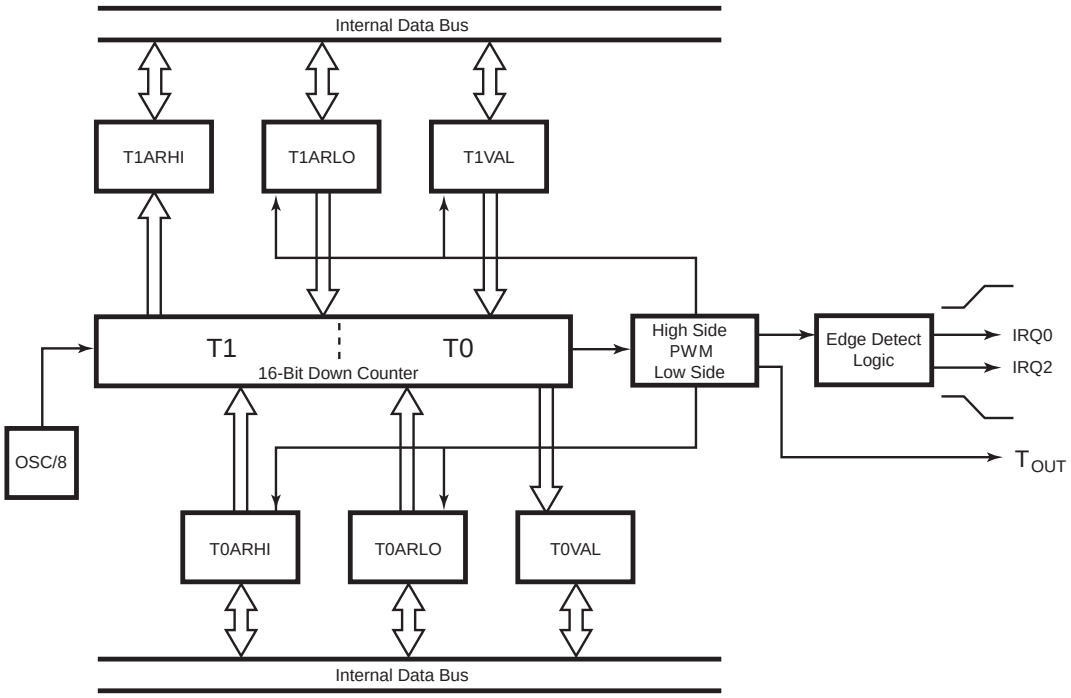

Figure 21. 16-Bit Standard PWM Timer

TIMERS (Continued)

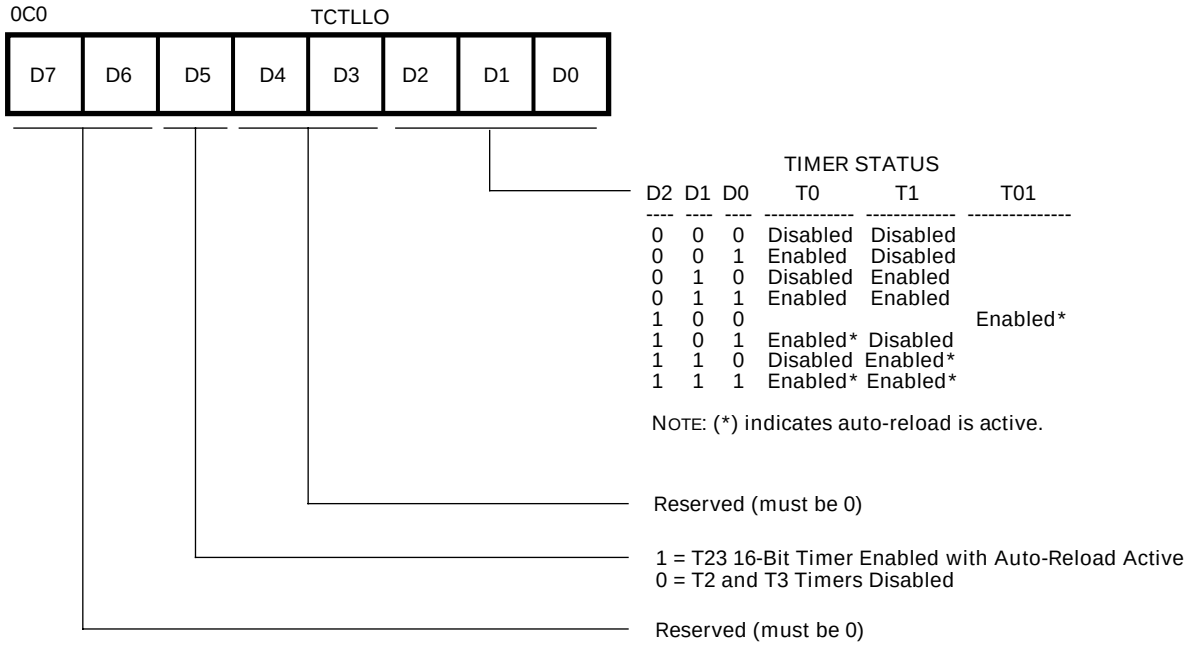

Note: Timer T01 is a 16-bit PWM Timer formed by cascading 8-bit timers T1 (MSB) and T0 (LSB). T23 is a standard 16-bit timer formed by cascading 8-bit timers T3 (MSB) and T2 (LSB).

Figure 22. TCTLLO Register

A pair of READ/WRITE registers is utilized for each 8-bit timer. One register is defined to contain the auto-initialization value for the timer. The second register contains the current value for the timer. When a timer is enabled, the timer decrements the value in its count register and continues decrementing until it reaches 0. An interrupt is generated, and the contents of the auto-initialization register are optionally copied into the count value register. If auto-initialization is not enabled, the timer stops counting when the value reaches 0. Control logic clears the appropriate control register bit to disable the timer. This operation is referred to as a *single-shot*. If auto-initialization is enabled, the timer counts from the initialization value. Software must not attempt to use timer registers for any other function.

User software is allowed to write to any WRITE register at any time; however, care should be taken if timer registers are updated while the timer is enabled. If software changes the count value while the timer is in operation, the timer continues counting from the updated value.

Note: Unpredictable behavior can occur if the value updates at the same time that the timer reaches 0.

Similarly, if user software changes the initialization value register while the timer is active, the next time that the timer reaches 0, the timer initializes to the changed value.

Note: Unpredictable behavior can occur if the initialization value register is changed while the timer is in the process of being initialized.

The initialization value is determined by the exact timing of the WRITE operation. In all cases, the Z8Plus assigns a higher priority to the software WRITE than to a decrementer write-back. However, when hardware clears a control register bit for a timer that is configured for single-shot operation, the clearing of the control bit overrides a software WRITE. A READ of either register can be conducted at any time, with no effect on the functionality of the timer.

TIMERS (Continued)

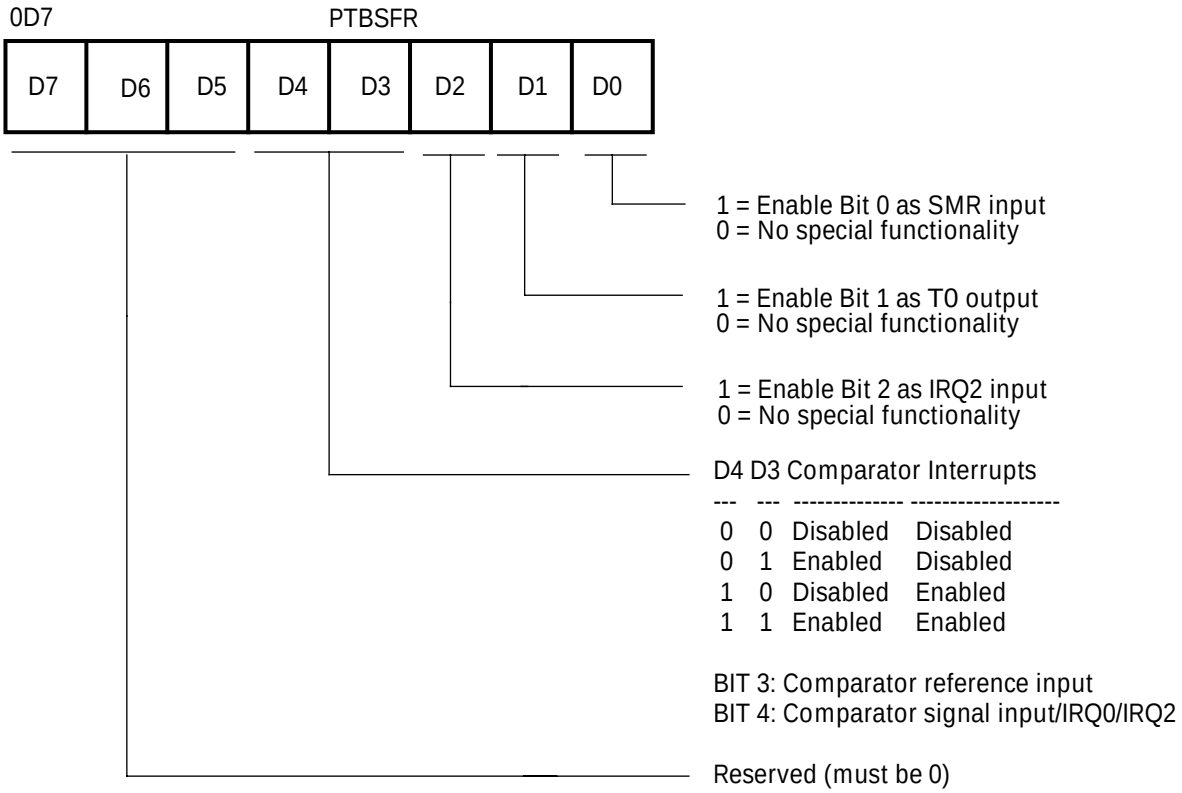

Figure 23. PortB Special Function Register

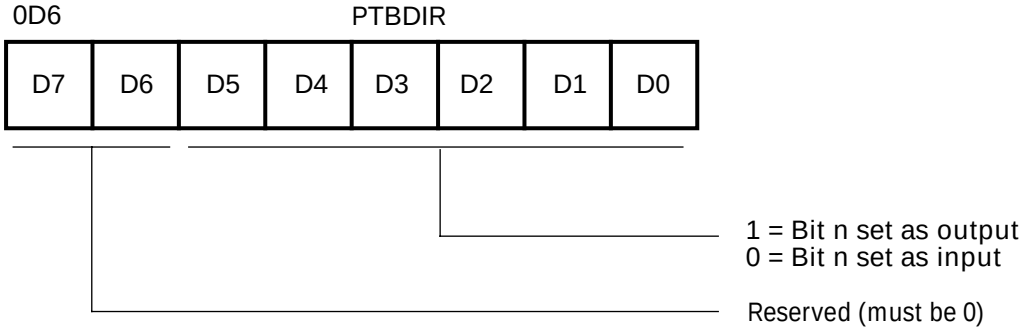

Figure 24. Port B Directional Control Register

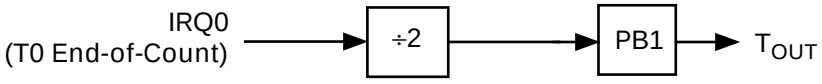

Figure 25. Timer T0 Output Through T_{OUT}

RESET CONDITIONS

After a $\overline{RESET}$, the timers are disabled. See Table 8 for timer control, value, and auto-initialization register status after $\overline{RESET}$.

I/O PORTS

The Z8Plus dedicates 14 lines to input and output. These lines are grouped into two ports known as Port A and Port B. Port A is an 8-bit port, bit programmable as either inputs or outputs. Port B can be programmed to provide either standard input/output, or the following special functions: T0 output, comparator inputs, SMR input, and external interrupt inputs.

All pins except PB5 include push-pull CMOS outputs. In addition, the outputs of Port A on a bit-wise basis can be configured for open-drain operation. The ports operate on a bit-wise basis. As such, the register values for/at a given bit position only affect the bit in question.

Each port is defined by a set of four control registers (Figure 26).

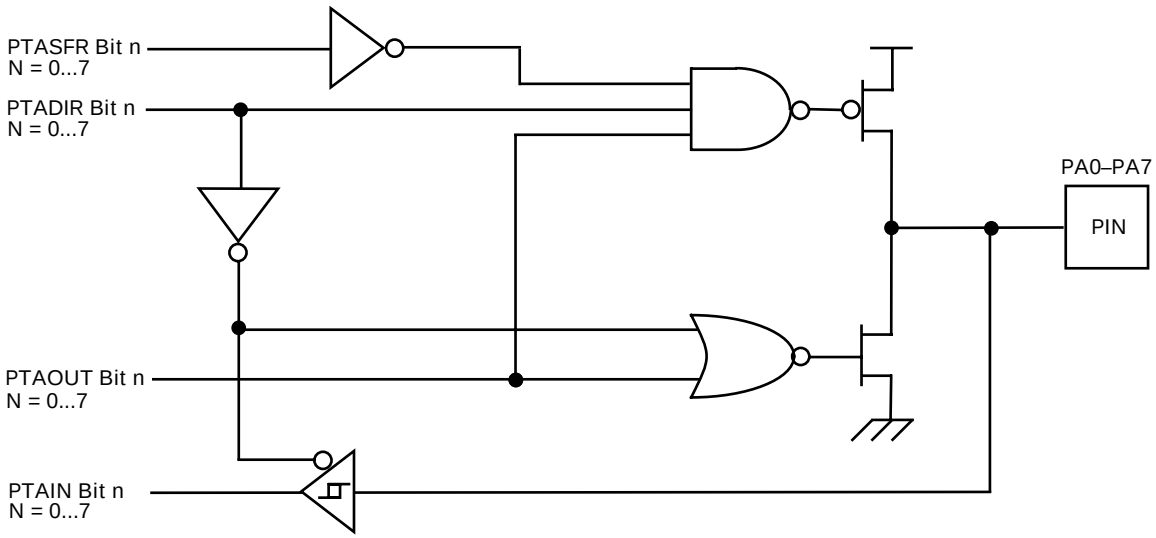

Figure 26. Port A Configuration with Open-Drain Capability and Schmitt-Trigger

Directional Control and Special Function Registers

Each port on the Z8Plus features a dedicated directional control register that determines (on a bit-wise basis) if a given port bit operates as input or output.

Each port on the Z8Plus features a special function register (SFR) that, in conjunction with the directional control register, implements (on a bit-by-bit basis) any special functionality that can be defined for each particular port bit.

Table 14. I/O Ports Registers

Register	Address	Identifier
Port B Special Function	0D7H	PTBSFR
Port B Directional Control	0D6H	PTBDIR
Port B Output Value	0D5H	PTBOUT
Port B Input Value	0D4H	PTBIN
Port A Special Function	0D3H	PTASFR
Port A Directional Control	0D2H	PTADIR
Port A Output Value	0D1H	PTAOUT
Port A Input Value	0D0H	PTAIN

Input and Output Value Registers

Each port features an Output Value Register and an input value register. For port bits configured as an input by means of the directional control register, the input value register

PORT A REGISTER DIAGRAMS

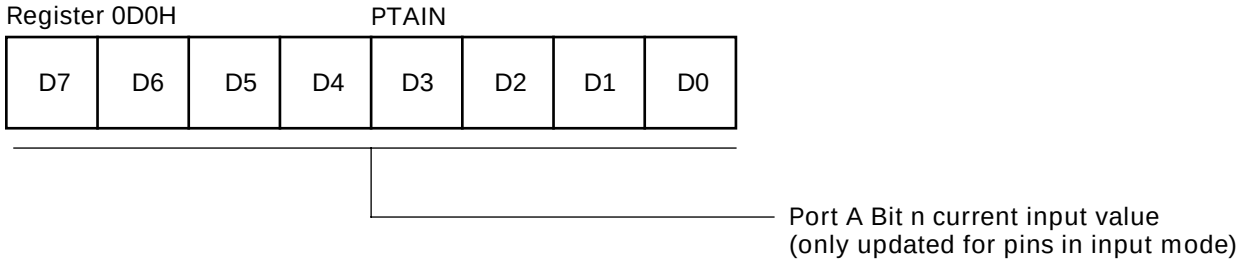

Figure 28. Port A Input Value Register

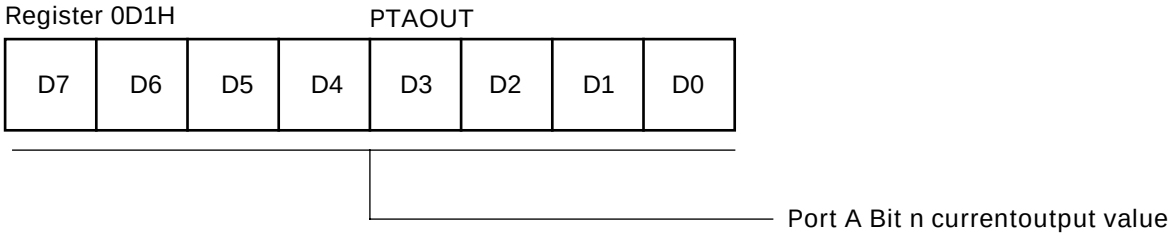

Figure 29. Port A Output Value Register

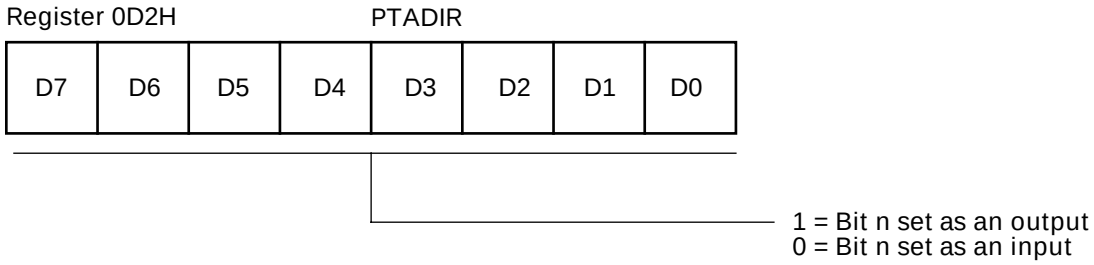

Figure 30. Port A Directional Control Register

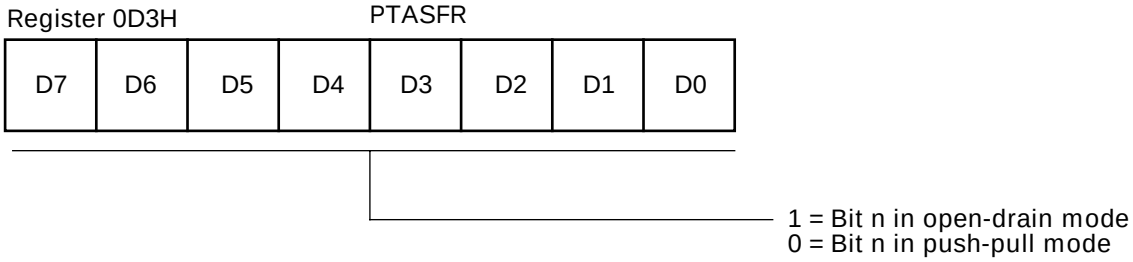

Figure 31. Port A Special Function Register

PORT B PIN 1 CONFIGURATION

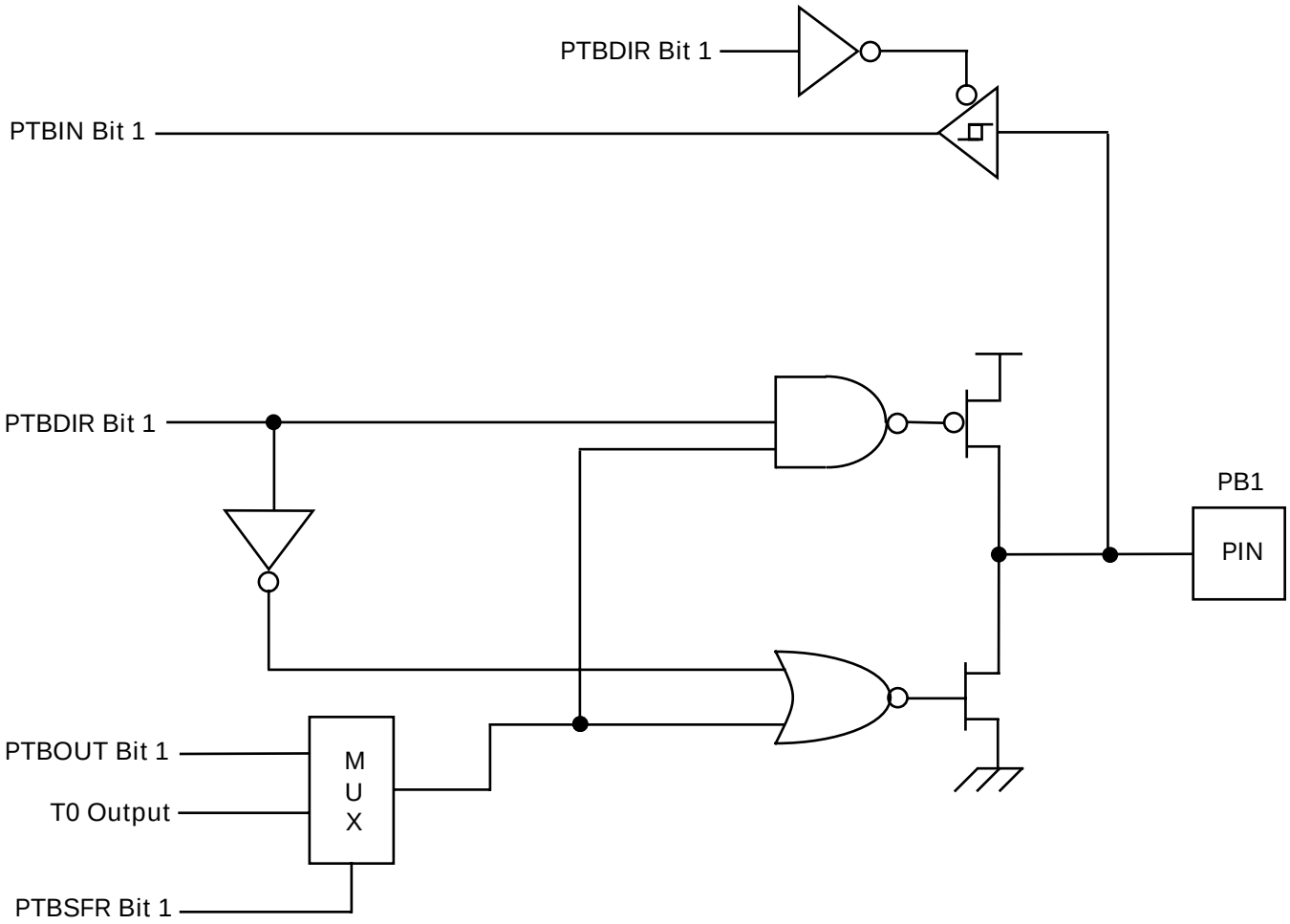

Figure 35. Port B Pin 1 Diagram

I/O PORT RESET CONDITIONS

Full Reset

Port A and Port B output value registers are not affected by $\overline{\text{RESET}}$.

On $\overline{\text{RESET}}$, the Port A and Port B directional control registers are cleared to all zeros, which defines all pins in both ports as inputs.

On $\overline{\text{RESET}}$, the directional control registers redefine all pins as inputs, and the Port A and Port B input value registers overwrites the previously held data with the current sample of the input pins.

On $\overline{\text{RESET}}$, the Port A and Port B special function registers are cleared to 00h, which deactivates all port special functions.

Note: The SMR and WDT time-out events are *not* full device resets. The port control registers are not affected by either of these events.

ANALOG COMPARATOR

The device includes one on-chip analog comparator. Pin PB4 features a comparator front end. The comparator reference voltage is on pin PB3.

Comparator Description

The on-chip comparator can process an analog signal on PB4 with reference to the voltage on PB3. The analog function is enabled by programming the Port B special function register bits 3 and 4.

When the analog comparator function is enabled, bit 4 of the input register is defined as holding the synchronized output of the comparator, while bit 3 retains a synchronized sample of the reference input.

If the interrupts for PB4 are enabled when the comparator special function is selected, the output of the comparator generates interrupts.

COMPARATOR OPERATION

The comparator output reflects the relationship between the analog input to the reference input. If the voltage on the analog input is higher than the voltage on the reference input, then the comparator output is at a High state. If the voltage on the analog input is lower than the voltage on the reference input, then the analog output is at a Low state.

Comparator Definitions

V_{ICR}

The usable voltage range for the positive input and reference input is called the Comparator Input Common Mode Voltage Range (V_{ICR}).

Note: The comparator is not guaranteed to work if the input is outside of the V_{ICR} range.

V_{OFFSET}

The absolute value of the voltage between the positive input and the reference input required to make the comparator output voltage switch is the Comparator Input Offset Voltage (V_{OFFSET}).

I_{IO}

For the CMOS voltage comparator input, the input offset current (I_{IO}) is the leakage current of the CMOS input gate.

HALT Mode

The analog comparator is functional during HALT mode. If the interrupts are enabled, an interrupt generated by the comparator causes a return from HALT mode.

STOP Mode

The analog comparator is disabled during STOP mode. The comparator is powered down to prevent it from drawing any current.

Low Voltage Protection. An on-board Voltage Comparator checks that the V_{CC} is at the required level to ensure correct operation of the device. A reset is globally driven if V_{CC} is below the specified voltage (Low Voltage Protection).

The device functions normally at or above 3.0V under all conditions, and is guaranteed to function normally at supply voltages above the Low Voltage Protection trip point. Below 3.0V, the device functions normally until the Low Volt-

PACKAGE INFORMATION

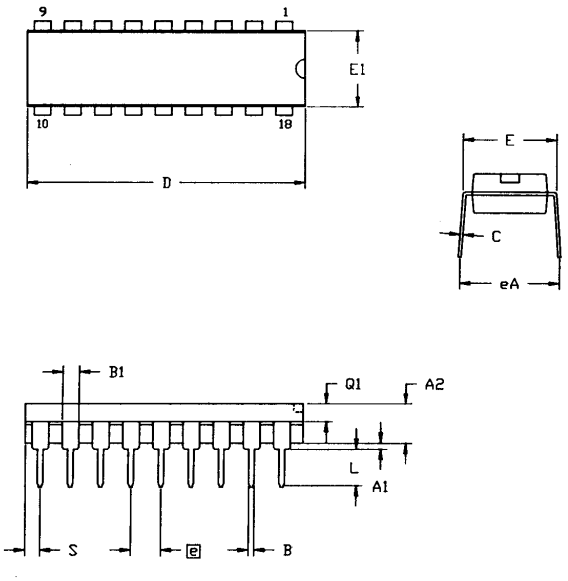

SYMBOL	MILLIMETER		INCH	
	MIN	MAX	MIN	MAX
A1	0.51	0.81	.020	.032
A2	3.25	3.43	.128	.135
B	0.38	0.53	.015	.021
B1	1.14	1.65	.045	.065
C	0.23	0.38	.009	.015
D	22.35	23.37	.880	.920
E	7.62	8.13	.300	.320
E1	6.22	6.48	.245	.255
e	2.54 TYP		.100 TYP	
eA	7.87	8.89	.310	.350
L	3.18	3.81	.125	.150
Q1	1.52	1.65	.060	.065
S	0.89	1.65	.035	.065

CONTROLLING DIMENSIONS : INCH

Figure 45. 18-Pin DIP Package Diagram

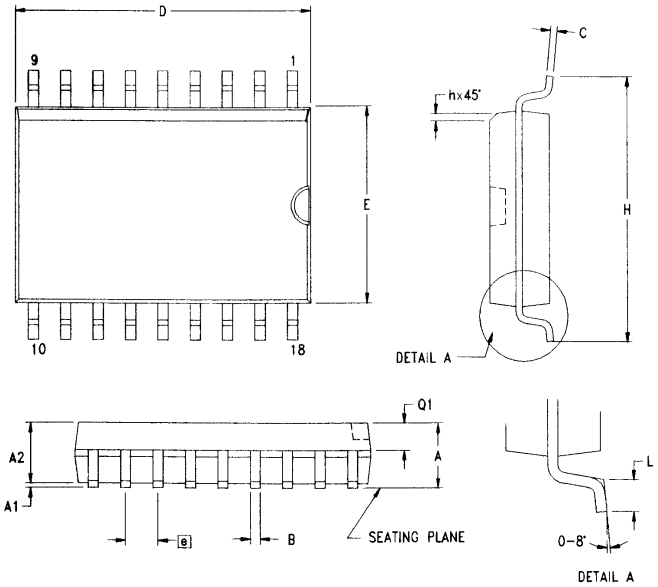

SYMBOL	MILLIMETER		INCH	
	MIN	MAX	MIN	MAX
A	2.40	2.65	0.094	0.104
A1	0.10	0.30	0.004	0.012
A2	2.24	2.44	0.088	0.096
B	0.36	0.46	0.014	0.018
C	0.23	0.30	0.009	0.012
D	11.40	11.75	0.449	0.463
E	7.40	7.60	0.291	0.299
e	1.27 TYP		0.050 TYP	
H	10.00	10.65	0.394	0.419
h	0.30	0.50	0.012	0.020
L	0.60	1.00	0.024	0.039
Q1	0.97	1.07	0.038	0.042

CONTROLLING DIMENSIONS : MM
LEADS ARE COPLANAR WITHIN .004 INCH.

Figure 46. 18-Pin SOIC Package Diagram