Welcome to E-XFL.COM

What is "Embedded - Microcontrollers"?

"Embedded - Microcontrollers" refer to small, integrated circuits designed to perform specific tasks within larger systems. These microcontrollers are essentially compact computers on a single chip, containing a processor core, memory, and programmable input/output peripherals. They are called "embedded" because they are embedded within electronic devices to control various functions, rather than serving as standalone computers. Microcontrollers are crucial in modern electronics, providing the intelligence and control needed for a wide range of applications.

Applications of "Embedded - Microcontrollers"

Details	
Product Status	Active
Core Processor	PIC
Core Size	8-Bit
Speed	20MHz
Connectivity	I²C, SPI, UART/USART
Peripherals	Brown-out Detect/Reset, POR, PWM, WDT
Number of I/O	22
Program Memory Size	7KB (4K x 14)
Program Memory Type	FLASH
EEPROM Size	128 x 8
RAM Size	192 x 8
Voltage - Supply (Vcc/Vdd)	4V ~ 5.5V
Data Converters	A/D 5x10b
Oscillator Type	External
Operating Temperature	-40°C ~ 125°C (TA)
Mounting Type	Surface Mount
Package / Case	28-SSOP (0.209", 5.30mm Width)
Supplier Device Package	28-SSOP
Purchase URL	https://www.e-xfl.com/product-detail/microchip-technology/pic16f873a-e-ss

Pin Diagrams (Continued)

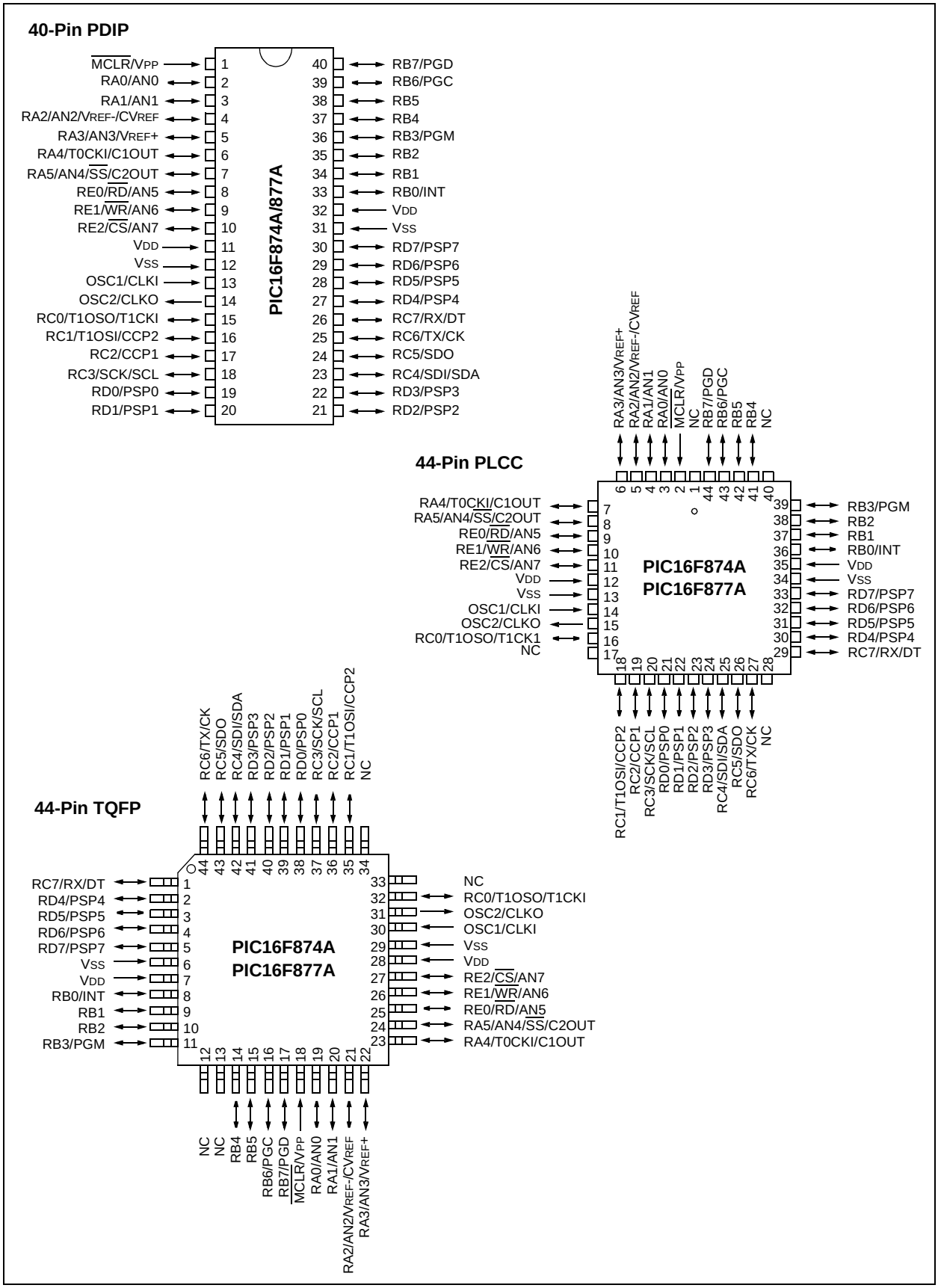

1.0 DEVICE OVERVIEW

This document contains device specific information about the following devices:

- PIC16F873A
- PIC16F874A
- PIC16F876A
- PIC16F877A

PIC16F873A/876A devices are available only in 28-pin packages, while PIC16F874A/877A devices are available in 40-pin and 44-pin packages. All devices in the PIC16F87XA family share common architecture with the following differences:

- The PIC16F873A and PIC16F874A have one-half of the total on-chip memory of the PIC16F876A and PIC16F877A
- The 28-pin devices have three I/O ports, while the 40/44-pin devices have five
- The 28-pin devices have fourteen interrupts, while the 40/44-pin devices have fifteen
- The 28-pin devices have five A/D input channels, while the 40/44-pin devices have eight
- The Parallel Slave Port is implemented only on the 40/44-pin devices

The available features are summarized in Table 1-1. Block diagrams of the PIC16F873A/876A and PIC16F874A/877A devices are provided in Figure 1-1 and Figure 1-2, respectively. The pinouts for these device families are listed in Table 1-2 and Table 1-3.

Additional information may be found in the PIC® Mid-Range Reference Manual (DS33023), which may be obtained from your local Microchip Sales Representative or downloaded from the Microchip web site. The Reference Manual should be considered a complementary document to this data sheet and is highly recommended reading for a better understanding of the device architecture and operation of the peripheral modules.

TABLE 1-1: PIC16F87XA DEVICE FEATURES

Key Features	PIC16F873A	PIC16F874A	PIC16F876A	PIC16F877A
Operating Frequency	DC – 20 MHz	DC – 20 MHz	DC – 20 MHz	DC – 20 MHz
Resets (and Delays)	POR, BOR (PWRT, OST)	POR, BOR (PWRT, OST)	POR, BOR (PWRT, OST)	POR, BOR (PWRT, OST)
Flash Program Memory (14-bit words)	4K	4K	8K	8K
Data Memory (bytes)	192	192	368	368
EEPROM Data Memory (bytes)	128	128	256	256
Interrupts	14	15	14	15
I/O Ports	Ports A, B, C	Ports A, B, C, D, E	Ports A, B, C	Ports A, B, C, D, E
Timers	3	3	3	3
Capture/Compare/PWM modules	2	2	2	2
Serial Communications	MSSP, USART	MSSP, USART	MSSP, USART	MSSP, USART
Parallel Communications	—	PSP	—	PSP
10-bit Analog-to-Digital Module	5 input channels	8 input channels	5 input channels	8 input channels
Analog Comparators	2	2	2	2
Instruction Set	35 Instructions	35 Instructions	35 Instructions	35 Instructions
Packages	28-pin PDIP 28-pin SOIC 28-pin SSOP 28-pin QFN	40-pin PDIP 44-pin PLCC 44-pin TQFP 44-pin QFN	28-pin PDIP 28-pin SOIC 28-pin SSOP 28-pin QFN	40-pin PDIP 44-pin PLCC 44-pin TQFP 44-pin QFN

© 2001-2013 Microchip Technology Inc.

2.2.2.2 OPTION_REG Register

The OPTION_REG Register is a readable and writable register, which contains various control bits to configure the TMR0 prescaler/WDT postscaler (single assignable register known also as the prescaler), the external INT interrupt, TMR0 and the weak pull-ups on PORTB.

> **Note:** To achieve a 1:1 prescaler assignment for the TMR0 register, assign the prescaler to the Watchdog Timer.

REGISTER 2-2: OPTION_REG REGISTER (ADDRESS 81h, 181h)

R/W-1	R/W-1	R/W-1	R/W-1	R/W-1	R/W-1	R/W-1	R/W-1
$\overline{\text{RBPU}}$	INTEDG	T0CS	T0SE	PSA	PS2	PS1	PS0
bit 7							bit 0

bit 7 **$\overline{\text{RBPU}}$:** PORTB Pull-up Enable bit
1 = PORTB pull-ups are disabled
0 = PORTB pull-ups are enabled by individual port latch values

bit 6 **INTEDG**: Interrupt Edge Select bit
1 = Interrupt on rising edge of RB0/INT pin
0 = Interrupt on falling edge of RB0/INT pin

bit 5 **T0CS**: TMR0 Clock Source Select bit
1 = Transition on RA4/T0CKI pin
0 = Internal instruction cycle clock (CLKO)

bit 4 **T0SE**: TMR0 Source Edge Select bit
1 = Increment on high-to-low transition on RA4/T0CKI pin
0 = Increment on low-to-high transition on RA4/T0CKI pin

bit 3 **PSA**: Prescaler Assignment bit
1 = Prescaler is assigned to the WDT
0 = Prescaler is assigned to the Timer0 module

bit 2-0 **PS2:PS0**: Prescaler Rate Select bits

Bit Value	TMR0 Rate	WDT Rate
000	1 : 2	1 : 1
001	1 : 4	1 : 2
010	1 : 8	1 : 4
011	1 : 16	1 : 8
100	1 : 32	1 : 16
101	1 : 64	1 : 32
110	1 : 128	1 : 64
111	1 : 256	1 : 128

Legend:			
R = Readable bit	W = Writable bit	U = Unimplemented bit, read as ‘0’	
- n = Value at POR	‘1’ = Bit is set	‘0’ = Bit is cleared	x = Bit is unknown

> **Note:** When using Low-Voltage ICSP Programming (LVP) and the pull-ups on PORTB are enabled, bit 3 in the TRISB register must be cleared to disable the pull-up on RB3 and ensure the proper operation of the device

TABLE 4-10: SUMMARY OF REGISTERS ASSOCIATED WITH PORTE

Address	Name	Bit 7	Bit 6	Bit 5	Bit 4	Bit 3	Bit 2	Bit 1	Bit 0	Value on: POR, BOR	Value on all other Resets
09h	PORTE	—	—	—	—	—	RE2	RE1	RE0	---- -xxx	---- -uuu
89h	TRISE	IBF	OBF	IBOV	PSPMODE	—	PORTE Data Direction bits			0000 -111	0000 -111
9Fh	ADCON1	ADFM	ADCS2	—	—	PCFG3	PCFG2	PCFG1	PCFG0	00-- 0000	00-- 0000

Legend: x = unknown, u = unchanged, - = unimplemented, read as '0'. Shaded cells are not used by PORTE.

REGISTER 4-1: TRISE REGISTER (ADDRESS 89h)

R-0	R-0	R/W-0	R/W-0	U-0	R/W-1	R/W-1	R/W-1
IBF	OBF	IBOV	PSPMODE	—	Bit 2	Bit 1	Bit 0
bit 7							bit 0

Parallel Slave Port Status/Control Bits:

bit 7 **IBF:** Input Buffer Full Status bit
1 = A word has been received and is waiting to be read by the CPU
0 = No word has been received

bit 6 **OBF**: Output Buffer Full Status bit
1 = The output buffer still holds a previously written word
0 = The output buffer has been read

bit 5 **IBOV**: Input Buffer Overflow Detect bit (in Microprocessor mode)
1 = A write occurred when a previously input word has not been read (must be cleared in software)
0 = No overflow occurred

bit 4 **PSPMODE**: Parallel Slave Port Mode Select bit
1 = PORTD functions in Parallel Slave Port mode
0 = PORTD functions in general purpose I/O mode

bit 3 **Unimplemented**: Read as '0'

PORTE Data Direction Bits:

bit 2 **Bit 2**: Direction Control bit for pin RE2/$\overline{CS}$/AN7
1 = Input
0 = Output

bit 1 **Bit 1**: Direction Control bit for pin RE1/$\overline{WR}$/AN6
1 = Input
0 = Output

bit 0 **Bit 0**: Direction Control bit for pin RE0/$\overline{RD}$/AN5
1 = Input
0 = Output

Legend:			
R = Readable bit	W = Writable bit	U = Unimplemented bit, read as '0'	
- n = Value at POR	'1' = Bit is set	'0' = Bit is cleared	x = Bit is unknown

© 2001-2013 Microchip Technology Inc.

5.2 Using Timer0 with an External Clock

When no prescaler is used, the external clock input is the same as the prescaler output. The synchronization of T0CKI with the internal phase clocks is accomplished by sampling the prescaler output on the Q2 and Q4 cycles of the internal phase clocks. Therefore, it is necessary for T0CKI to be high for at least 2 TOSC (and a small RC delay of 20 ns) and low for at least 2 TOSC (and a small RC delay of 20 ns). Refer to the electrical specification of the desired device.

5.3 Prescaler

There is only one prescaler available which is mutually exclusively shared between the Timer0 module and the Watchdog Timer. A prescaler assignment for the Timer0 module means that there is no prescaler for the Watchdog Timer and vice versa. This prescaler is not readable or writable (see Figure 5-1).

The PSA and PS2:PS0 bits (OPTION_REG<3:0>) determine the prescaler assignment and prescale ratio.

When assigned to the Timer0 module, all instructions writing to the TMR0 register (e.g., `CLRF 1`, `MOVWF 1`, `BSF 1,x`....etc.) will clear the prescaler. When assigned to WDT, a `CLRWDT` instruction will clear the prescaler along with the Watchdog Timer. The prescaler is not readable or writable.

> **Note:** Writing to TMR0 when the prescaler is assigned to Timer0 will clear the prescaler count, but will not change the prescaler assignment.

REGISTER 5-1: OPTION_REG REGISTER

R/W-1	R/W-1	R/W-1	R/W-1	R/W-1	R/W-1	R/W-1	R/W-1
$\overline{\text{RBPU}}$	INTEDG	T0CS	T0SE	PSA	PS2	PS1	PS0
bit 7							bit 0

bit 7 **$\overline{\text{RBPU}}$**

bit 6 **INTEDG**

bit 5 **T0CS**: TMR0 Clock Source Select bit
`1` = Transition on T0CKI pin
`0` = Internal instruction cycle clock (CLKO)

bit 4 **T0SE**: TMR0 Source Edge Select bit
`1` = Increment on high-to-low transition on T0CKI pin
`0` = Increment on low-to-high transition on T0CKI pin

bit 3 **PSA**: Prescaler Assignment bit
`1` = Prescaler is assigned to the WDT
`0` = Prescaler is assigned to the Timer0 module

bit 2-0 **PS2:PS0**: Prescaler Rate Select bits

Bit Value	TMR0 Rate	WDT Rate
000	1 : 2	1 : 1
001	1 : 4	1 : 2
010	1 : 8	1 : 4
011	1 : 16	1 : 8
100	1 : 32	1 : 16
101	1 : 64	1 : 32
110	1 : 128	1 : 64
111	1 : 256	1 : 128

Legend:			
R = Readable bit	W = Writable bit	U = Unimplemented bit, read as ‘0’	
- n = Value at POR	‘1’ = Bit is set	‘0’ = Bit is cleared	x = Bit is unknown

> **Note:** To avoid an unintended device Reset, the instruction sequence shown in the PIC® Mid-Range MCU Family Reference Manual (DS33023) must be executed when changing the prescaler assignment from Timer0 to the WDT. This sequence must be followed even if the WDT is disabled.

© 2001-2013 Microchip Technology Inc.

8.0 CAPTURE/COMPARE/PWM MODULES

Each Capture/Compare/PWM (CCP) module contains a 16-bit register which can operate as a:

- 16-bit Capture register
- 16-bit Compare register
- PWM Master/Slave Duty Cycle register

Both the CCP1 and CCP2 modules are identical in operation, with the exception being the operation of the special event trigger. Table 8-1 and Table 8-2 show the resources and interactions of the CCP module(s). In the following sections, the operation of a CCP module is described with respect to CCP1. CCP2 operates the same as CCP1 except where noted.

CCP1 Module:

Capture/Compare/PWM Register 1 (CCPR1) is comprised of two 8-bit registers: CCPR1L (low byte) and CCPR1H (high byte). The CCP1CON register controls the operation of CCP1. The special event trigger is generated by a compare match and will reset Timer1.

CCP2 Module:

Capture/Compare/PWM Register 2 (CCPR2) is comprised of two 8-bit registers: CCPR2L (low byte) and CCPR2H (high byte). The CCP2CON register controls the operation of CCP2. The special event trigger is generated by a compare match and will reset Timer1 and start an A/D conversion (if the A/D module is enabled).

Additional information on CCP modules is available in the PIC® Mid-Range MCU Family Reference Manual (DS33023) and in application note *AN594, "Using the CCP Module(s)"* (DS00594).

TABLE 8-1: CCP MODE – TIMER RESOURCES REQUIRED

CCP Mode	Timer Resource
Capture	Timer1
Compare	Timer1
PWM	Timer2

TABLE 8-2: INTERACTION OF TWO CCP MODULES

CCPx Mode	CCPy Mode	Interaction
Capture	Capture	Same TMR1 time base
Capture	Compare	The compare should be configured for the special event trigger which clears TMR1
Compare	Compare	The compare(s) should be configured for the special event trigger which clears TMR1
PWM	PWM	The PWMs will have the same frequency and update rate (TMR2 interrupt)
PWM	Capture	None
PWM	Compare	None

8.1 Capture Mode

In Capture mode, CCPR1H:CCPR1L captures the 16-bit value of the TMR1 register when an event occurs on pin RC2/CCP1. An event is defined as one of the following:

- Every falling edge
- Every rising edge
- Every 4th rising edge
- Every 16th rising edge

The type of event is configured by control bits, CCP1M3:CCP1M0 (CCPxCON<3:0>). When a capture is made, the interrupt request flag bit, CCP1IF (PIR1<2>), is set. The interrupt flag must be cleared in software. If another capture occurs before the value in register CCPR1 is read, the old captured value is overwritten by the new value.

8.1.1 CCP PIN CONFIGURATION

In Capture mode, the RC2/CCP1 pin should be configured as an input by setting the TRISC<2> bit.

Note:	If the RC2/CCP1 pin is configured as an output, a write to the port can cause a Capture condition.

FIGURE 8-1: CAPTURE MODE OPERATION BLOCK DIAGRAM

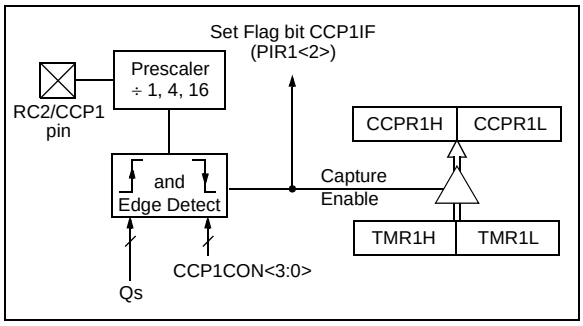

8.1.2 TIMER1 MODE SELECTION

Timer1 must be running in Timer mode, or Synchronized Counter mode, for the CCP module to use the capture feature. In Asynchronous Counter mode, the capture operation may not work.

8.1.3 SOFTWARE INTERRUPT

When the Capture mode is changed, a false capture interrupt may be generated. The user should keep bit CCP1IE (PIE1<2>) clear to avoid false interrupts and should clear the flag bit, CCP1IF, following any such change in operating mode.

8.1.4 CCP PRESCALER

There are four prescaler settings, specified by bits CCP1M3:CCP1M0. Whenever the CCP module is turned off, or the CCP module is not in Capture mode, the prescaler counter is cleared. Any Reset will clear the prescaler counter.

Switching from one capture prescaler to another may generate an interrupt. Also, the prescaler counter will not be cleared, therefore, the first capture may be from a non-zero prescaler. Example 8-1 shows the recommended method for switching between capture prescalers. This example also clears the prescaler counter and will not generate the “false” interrupt.

EXAMPLE 8-1: CHANGING BETWEEN CAPTURE PRESCALERS

```
CLRF    CCP1CON      ; Turn CCP module off
MOVLW   NEW_CAPT_PS  ; Load the W reg with
                     ; the new prescaler
                     ; move value and CCP ON
MOVWF   CCP1CON      ; Load CCP1CON with this
                     ; value
```

8.3 PWM Mode (PWM)

In Pulse Width Modulation mode, the CCPx pin produces up to a 10-bit resolution PWM output. Since the CCP1 pin is multiplexed with the PORTC data latch, the TRISC<2> bit must be cleared to make the CCP1 pin an output.

Note:	Clearing the CCP1CON register will force the CCP1 PWM output latch to the default low level. This is not the PORTC I/O data latch.

Figure 8-3 shows a simplified block diagram of the CCP module in PWM mode.

For a step-by-step procedure on how to set up the CCP module for PWM operation, see **Section 8.3.3 "Setup for PWM Operation"**.

FIGURE 8-3: SIMPLIFIED PWM BLOCK DIAGRAM

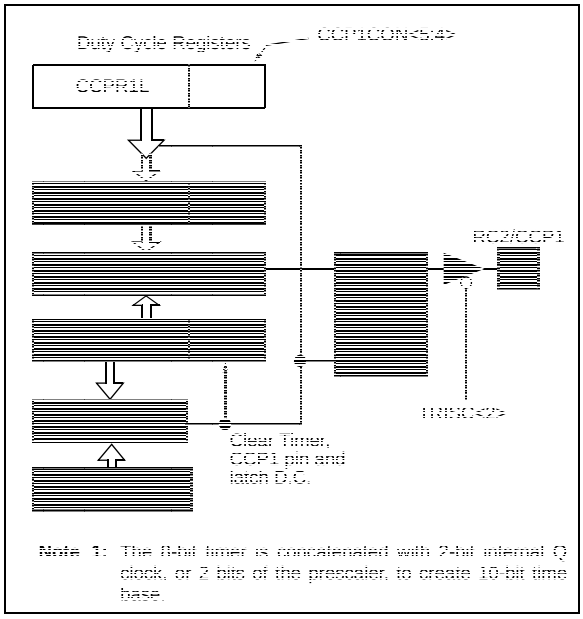

A PWM output (Figure 8-4) has a time base (period) and a time that the output stays high (duty cycle). The frequency of the PWM is the inverse of the period (1/period).

FIGURE 8-4: PWM OUTPUT

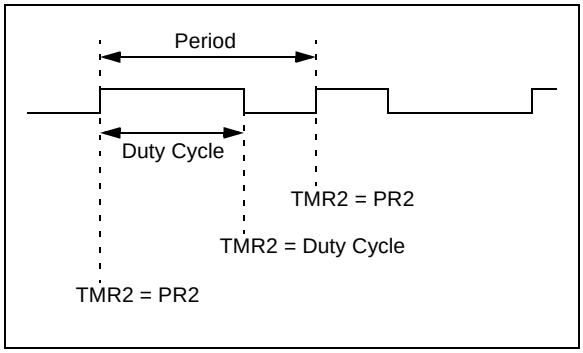

8.3.1 PWM PERIOD

The PWM period is specified by writing to the PR2 register. The PWM period can be calculated using the following formula:

$$\text{PWM Period} = [(PR2) + 1] \cdot 4 \cdot T_{OSC} \cdot (\text{TMR2 Prescale Value})$$

PWM frequency is defined as 1/[PWM period].

When TMR2 is equal to PR2, the following three events occur on the next increment cycle:

- TMR2 is cleared
- The CCP1 pin is set (exception: if PWM duty cycle = 0%, the CCP1 pin will not be set)
- The PWM duty cycle is latched from CCPR1L into CCPR1H

Note:	The Timer2 postscaler (see **Section 7.1 "Timer2 Prescaler and Postscaler"**) is not used in the determination of the PWM frequency. The postscaler could be used to have a servo update rate at a different frequency than the PWM output.

8.3.2 PWM DUTY CYCLE

The PWM duty cycle is specified by writing to the CCPR1L register and to the CCP1CON<5:4> bits. Up to 10-bit resolution is available. The CCPR1L contains the eight MSbs and the CCP1CON<5:4> contains the two LSbs. This 10-bit value is represented by CCPR1L:CCP1CON<5:4>. The following equation is used to calculate the PWM duty cycle in time:

$$\text{PWM Duty Cycle} = (CCPR1L{:}CCP1CON\langle 5{:}4\rangle) \cdot T_{OSC} \cdot (\text{TMR2 Prescale Value})$$

CCPR1L and CCP1CON<5:4> can be written to at any time, but the duty cycle value is not latched into CCPR1H until after a match between PR2 and TMR2 occurs (i.e., the period is complete). In PWM mode, CCPR1H is a read-only register.

The CCPR1H register and a 2-bit internal latch are used to double-buffer the PWM duty cycle. This double-buffering is essential for glitch-free PWM operation.

When the CCPR1H and 2-bit latch match TMR2, concatenated with an internal 2-bit Q clock or 2 bits of the TMR2 prescaler, the CCP1 pin is cleared.

The maximum PWM resolution (bits) for a given PWM frequency is given by the following formula.

EQUATION 8-1:

$$\text{Resolution} = \frac{\log\left(\frac{F_{OSC}}{F_{PWM}}\right)}{\log(2)} \text{ bits}$$

Note:	If the PWM duty cycle value is longer than the PWM period, the CCP1 pin will not be cleared.

NOTES:

© 2001-2013 Microchip Technology Inc.

9.4.9 I²C MASTER MODE REPEATED START CONDITION TIMING

A Repeated Start condition occurs when the RSEN bit (SSPCON2<1>) is programmed high and the I²C logic module is in the Idle state. When the RSEN bit is set, the SCL pin is asserted low. When the SCL pin is sampled low, the Baud Rate Generator is loaded with the contents of SSPADD<5:0> and begins counting. The SDA pin is released (brought high) for one Baud Rate Generator count (TBRG). When the Baud Rate Generator times out, if SDA is sampled high, the SCL pin will be deasserted (brought high). When SCL is sampled high, the Baud Rate Generator is reloaded with the contents of SSPADD<6:0> and begins counting. SDA and SCL must be sampled high for one TBRG. This action is then followed by assertion of the SDA pin (SDA = 0) for one TBRG while SCL is high. Following this, the RSEN bit (SSPCON2<1>) will be automatically cleared and the Baud Rate Generator will not be reloaded, leaving the SDA pin held low. As soon as a Start condition is detected on the SDA and SCL pins, the S bit (SSPSTAT<3>) will be set. The SSPIF bit will not be set until the Baud Rate Generator has timed out.

> **Note 1:** If RSEN is programmed while any other event is in progress, it will not take effect.
>
> **2:** A bus collision during the Repeated Start condition occurs if:
>
> - SDA is sampled low when SCL goes from low to high.
> - SCL goes low before SDA is asserted low. This may indicate that another master is attempting to transmit a data '1'.

Immediately following the SSPIF bit getting set, the user may write the SSPBUF with the 7-bit address in 7-bit mode or the default first address in 10-bit mode. After the first eight bits are transmitted and an ACK is received, the user may then transmit an additional eight bits of address (10-bit mode) or eight bits of data (7-bit mode).

9.4.9.1 WCOL Status Flag

If the user writes the SSPBUF when a Repeated Start sequence is in progress, the WCOL is set and the contents of the buffer are unchanged (the write doesn't occur).

> **Note:** Because queueing of events is not allowed, writing of the lower 5 bits of SSPCON2 is disabled until the Repeated Start condition is complete.

FIGURE 9-20: REPEAT START CONDITION WAVEFORM

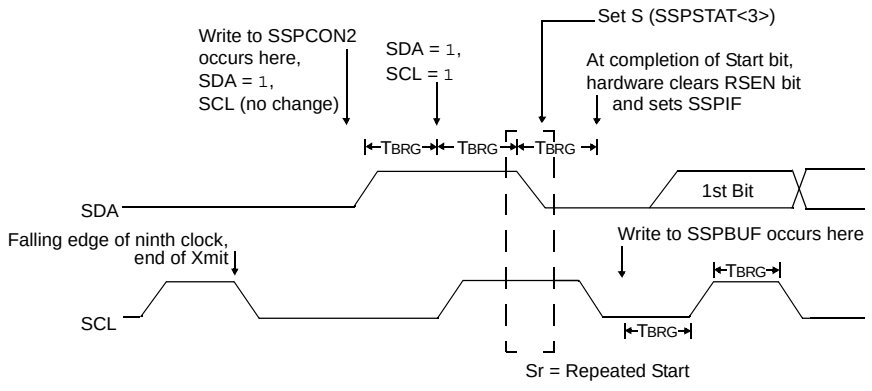

© 2001-2013 Microchip Technology Inc.

FIGURE 9-27: BUS COLLISION DURING START CONDITION (SCL = 0)

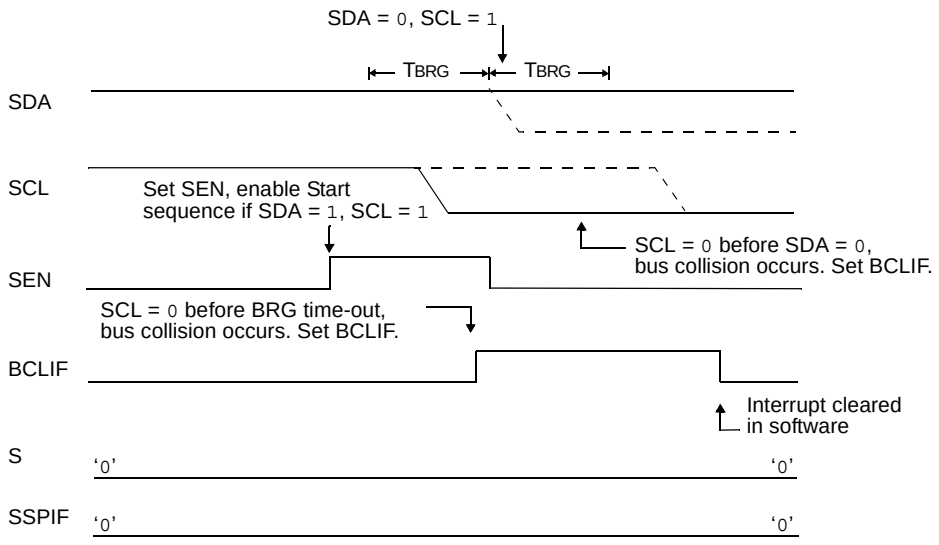

FIGURE 9-28: BRG RESET DUE TO SDA ARBITRATION DURING START CONDITION

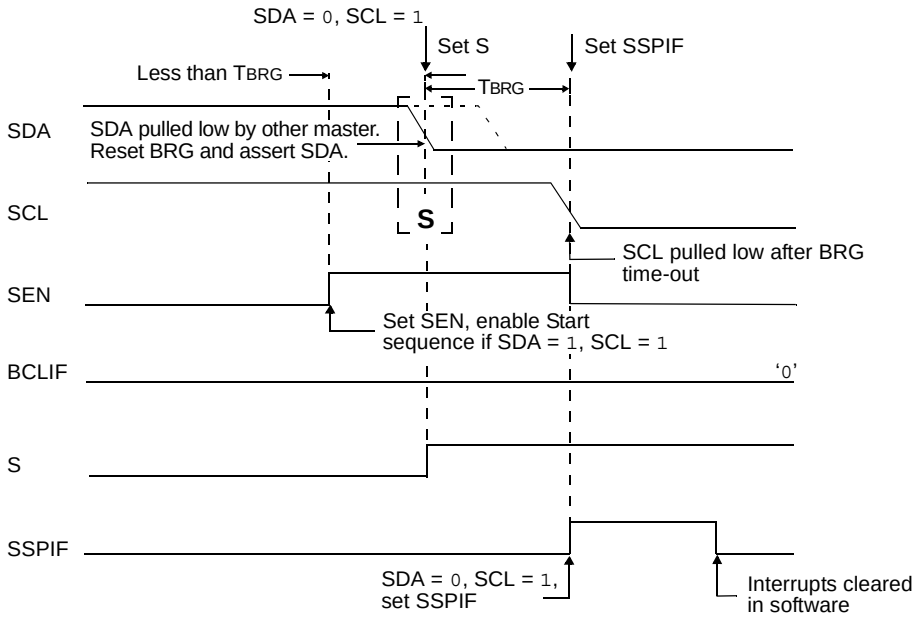

NOTES:

© 2001-2013 Microchip Technology Inc.

TABLE 10-3: BAUD RATES FOR ASYNCHRONOUS MODE (BRGH = 0)

BAUD RATE (K)	Fosc = 20 MHz			Fosc = 16 MHz			Fosc = 10 MHz		
	KBAUD	% ERROR	SPBRG value (decimal)	KBAUD	% ERROR	SPBRG value (decimal)	KBAUD	% ERROR	SPBRG value (decimal)
0.3	-	-	-	-	-	-	-	-	-
1.2	1.221	1.75	255	1.202	0.17	207	1.202	0.17	129
2.4	2.404	0.17	129	2.404	0.17	103	2.404	0.17	64
9.6	9.766	1.73	31	9.615	0.16	25	9.766	1.73	15
19.2	19.531	1.72	15	19.231	0.16	12	19.531	1.72	7
28.8	31.250	8.51	9	27.778	3.55	8	31.250	8.51	4
33.6	34.722	3.34	8	35.714	6.29	6	31.250	6.99	4
57.6	62.500	8.51	4	62.500	8.51	3	52.083	9.58	2
HIGH	1.221	-	255	0.977	-	255	0.610	-	255
LOW	312.500	-	0	250.000	-	0	156.250	-	0

BAUD RATE (K)	Fosc = 4 MHz			Fosc = 3.6864 MHz		
	KBAUD	% ERROR	SPBRG value (decimal)	KBAUD	% ERROR	SPBRG value (decimal)
0.3	0.300	0	207	0.3	0	191
1.2	1.202	0.17	51	1.2	0	47
2.4	2.404	0.17	25	2.4	0	23
9.6	8.929	6.99	6	9.6	0	5
19.2	20.833	8.51	2	19.2	0	2
28.8	31.250	8.51	1	28.8	0	1
33.6	-	-	-	-	-	-
57.6	62.500	8.51	0	57.6	0	0
HIGH	0.244	-	255	0.225	-	255
LOW	62.500	-	0	57.6	-	0

TABLE 10-4: BAUD RATES FOR ASYNCHRONOUS MODE (BRGH = 1)

BAUD RATE (K)	Fosc = 20 MHz			Fosc = 16 MHz			Fosc = 10 MHz		
	KBAUD	% ERROR	SPBRG value (decimal)	KBAUD	% ERROR	SPBRG value (decimal)	KBAUD	% ERROR	SPBRG value (decimal)
0.3	-	-	-	-	-	-	-	-	-
1.2	-	-	-	-	-	-	-	-	-
2.4	-	-	-	-	-	-	2.441	1.71	255
9.6	9.615	0.16	129	9.615	0.16	103	9.615	0.16	64
19.2	19.231	0.16	64	19.231	0.16	51	19.531	1.72	31
28.8	29.070	0.94	42	29.412	2.13	33	28.409	1.36	21
33.6	33.784	0.55	36	33.333	0.79	29	32.895	2.10	18
57.6	59.524	3.34	20	58.824	2.13	16	56.818	1.36	10
HIGH	4.883	-	255	3.906	-	255	2.441	-	255
LOW	1250.000	-	0	1000.000		0	625.000	-	0

BAUD RATE (K)	Fosc = 4 MHz			Fosc = 3.6864 MHz		
	KBAUD	% ERROR	SPBRG value (decimal)	KBAUD	% ERROR	SPBRG value (decimal)
0.3	-	-	-	-	-	-
1.2	1.202	0.17	207	1.2	0	191
2.4	2.404	0.17	103	2.4	0	95
9.6	9.615	0.16	25	9.6	0	23
19.2	19.231	0.16	12	19.2	0	11
28.8	27.798	3.55	8	28.8	0	7
33.6	35.714	6.29	6	32.9	2.04	6
57.6	62.500	8.51	3	57.6	0	3
HIGH	0.977	-	255	0.9	-	255
LOW	250.000	-	0	230.4	-	0

© 2001-2013 Microchip Technology Inc.

FIGURE 10-5: ASYNCHRONOUS RECEPTION

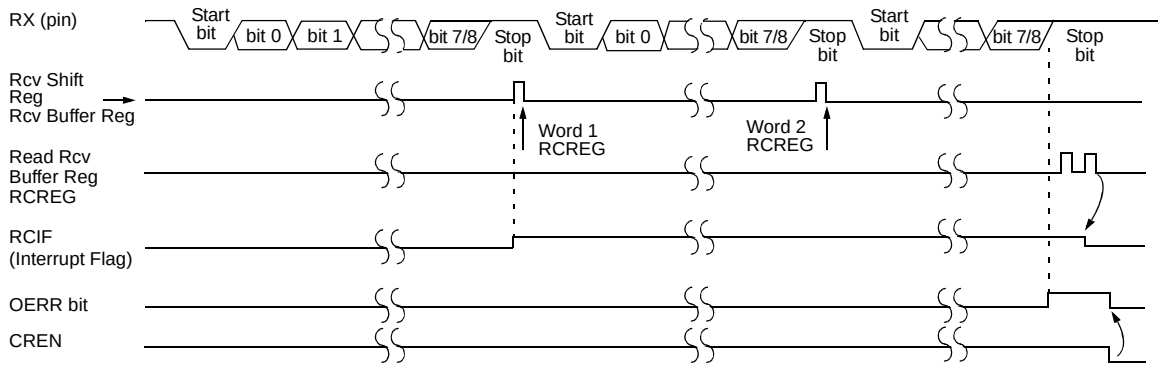

Note: This timing diagram shows three words appearing on the RX input. The RCREG (Receive Buffer) is read after the third word, causing the OERR (Overrun Error) bit to be set.

When setting up an Asynchronous Reception, follow these steps:

1. Initialize the SPBRG register for the appropriate baud rate. If a high-speed baud rate is desired, set bit BRGH (**Section 10.1 "USART Baud Rate Generator (BRG)"**).
2. Enable the asynchronous serial port by clearing bit SYNC and setting bit SPEN.
3. If interrupts are desired, then set enable bit RCIE.
4. If 9-bit reception is desired, then set bit RX9.
5. Enable the reception by setting bit CREN.
6. Flag bit RCIF will be set when reception is complete and an interrupt will be generated if enable bit RCIE is set.
7. Read the RCSTA register to get the ninth bit (if enabled) and determine if any error occurred during reception.
8. Read the 8-bit received data by reading the RCREG register.
9. If any error occurred, clear the error by clearing enable bit CREN.
10. If using interrupts, ensure that GIE and PEIE (bits 7 and 6) of the INTCON register are set.

TABLE 10-6: REGISTERS ASSOCIATED WITH ASYNCHRONOUS RECEPTION

Address	Name	Bit 7	Bit 6	Bit 5	Bit 4	Bit 3	Bit 2	Bit 1	Bit 0	Value on: POR, BOR	Value on all other Resets
0Bh, 8Bh, 10Bh,18Bh	INTCON	GIE	PEIE	TMR0IE	INTE	RBIE	TMR0IF	INTF	R0IF	0000 000x	0000 000u
0Ch	PIR1	PSPIF(1)	ADIF	RCIF	TXIF	SSPIF	CCP1IF	TMR2IF	TMR1IF	0000 0000	0000 0000
18h	RCSTA	SPEN	RX9	SREN	CREN	—	FERR	OERR	RX9D	0000 -00x	0000 -00x
1Ah	RCREG	USART Receive Register								0000 0000	0000 0000
8Ch	PIE1	PSPIE(1)	ADIE	RCIE	TXIE	SSPIE	CCP1IE	TMR2IE	TMR1IE	0000 0000	0000 0000
98h	TXSTA	CSRC	TX9	TXEN	SYNC	—	BRGH	TRMT	TX9D	0000 -010	0000 -010
99h	SPBRG	Baud Rate Generator Register								0000 0000	0000 0000

Legend: x = unknown, - = unimplemented locations read as '0'. Shaded cells are not used for asynchronous reception.
Note 1: Bits PSPIE and PSPIF are reserved on 28-pin devices; always maintain these bits clear.

© 2001-2013 Microchip Technology Inc.

TABLE 10-8: REGISTERS ASSOCIATED WITH SYNCHRONOUS MASTER TRANSMISSION

Address	Name	Bit 7	Bit 6	Bit 5	Bit 4	Bit 3	Bit 2	Bit 1	Bit 0	Value on: POR, BOR	Value on all other Resets
0Bh, 8Bh, 10Bh,18Bh	INTCON	GIE	PEIE	TMR0IE	INTE	RBIE	TMR0IF	INTF	R0IF	0000 000x	0000 000u
0Ch	PIR1	PSPIF(1)	ADIF	RCIF	TXIF	SSPIF	CCP1IF	TMR2IF	TMR1IF	0000 0000	0000 0000
18h	RCSTA	SPEN	RX9	SREN	CREN	—	FERR	OERR	RX9D	0000 -00x	0000 -00x
19h	TXREG	USART Transmit Register								0000 0000	0000 0000
8Ch	PIE1	PSPIE(1)	ADIE	RCIE	TXIE	SSPIE	CCP1IE	TMR2IE	TMR1IE	0000 0000	0000 0000
98h	TXSTA	CSRC	TX9	TXEN	SYNC	—	BRGH	TRMT	TX9D	0000 -010	0000 -010
99h	SPBRG	Baud Rate Generator Register								0000 0000	0000 0000

Legend: x = unknown, - = unimplemented, read as '0'. Shaded cells are not used for synchronous master transmission.

Note 1: Bits PSPIE and PSPIF are reserved on 28-pin devices; always maintain these bits clear.

FIGURE 10-9: SYNCHRONOUS TRANSMISSION

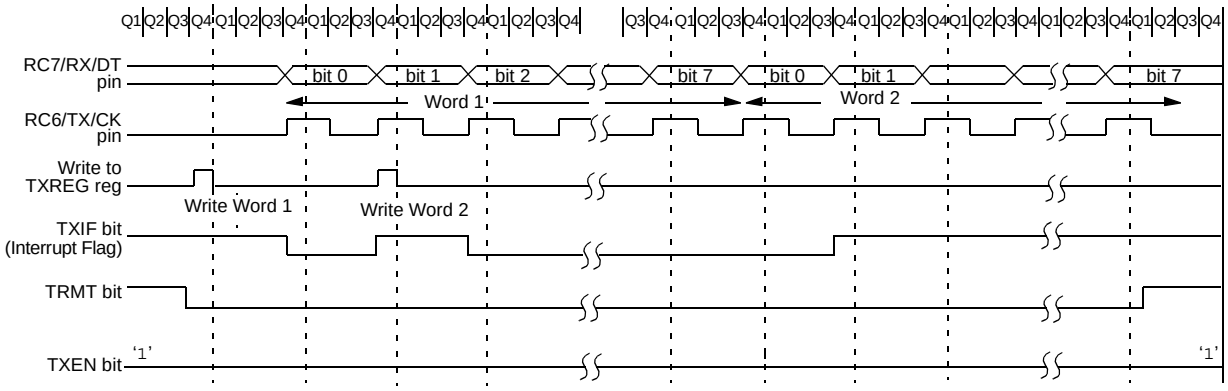

Note: Sync Master mode; SPBRG = 0. Continuous transmission of two 8-bit words.

FIGURE 10-10: SYNCHRONOUS TRANSMISSION (THROUGH TXEN)

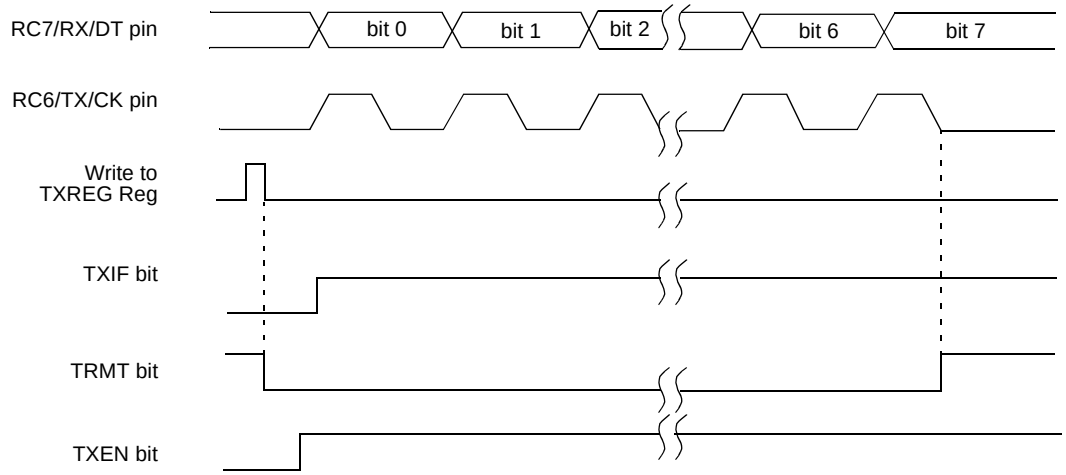

© 2001-2013 Microchip Technology Inc.

14.4 $\overline{\text{MCLR}}$

PIC16F87XA devices have a noise filter in the $\overline{\text{MCLR}}$ Reset path. The filter will detect and ignore small pulses.

It should be noted that a WDT Reset does not drive $\overline{\text{MCLR}}$ pin low.

The behavior of the ESD protection on the $\overline{\text{MCLR}}$ pin differs from previous devices of this family. Voltages applied to the pin that exceed its specification can result in both Resets and current consumption outside of device specification during the Reset event. For this reason, Microchip recommends that the $\overline{\text{MCLR}}$ pin no longer be tied directly to VDD. The use of an RCR network, as shown in Figure 14-5, is suggested.

FIGURE 14-5: RECOMMENDED $\overline{\text{MCLR}}$ CIRCUIT

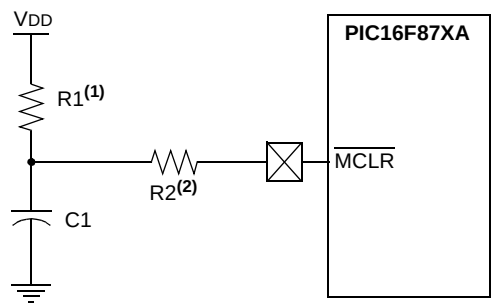

Note 1: R1 < 40 kΩ is recommended to make sure that the voltage drop across R does not violate the device's electrical specification.

2: R2 > than 1K will limit any current flowing into $\overline{\text{MCLR}}$ from the external capacitor C, in the event of $\overline{\text{MCLR}}$/VPP breakdown due to Electrostatic Discharge (ESD) or Electrical Overstress (EOS).

14.5 Power-on Reset (POR)

A Power-on Reset pulse is generated on-chip when VDD rise is detected (in the range of 1.2V-1.7V). To take advantage of the POR, tie the $\overline{\text{MCLR}}$ pin to VDD through an RC network, as described in **Section 14.4 "MCLR"**. A maximum rise time for VDD is specified. See **Section 17.0 "Electrical Characteristics"** for details.

When the device starts normal operation (exits the Reset condition), device operating parameters (voltage, frequency, temperature, etc.) must be met to ensure operation. If these conditions are not met, the device must be held in Reset until the operating conditions are met. Brown-out Reset may be used to meet the start-up conditions. For additional information, refer to application note, *AN607,* "*Power-up Trouble Shooting*" (DS00607).

14.6 Power-up Timer (PWRT)

The Power-up Timer provides a fixed 72 ms nominal time-out on power-up only from the POR. The Power-up Timer operates on an internal RC oscillator. The chip is kept in Reset as long as the PWRT is active. The PWRT's time delay allows VDD to rise to an acceptable level. A configuration bit is provided to enable or disable the PWRT.

The power-up time delay will vary from chip to chip due to VDD, temperature and process variation. See **Section 17.0 "Electrical Characteristics"** for details (TPWRT, parameter #33).

14.7 Oscillator Start-up Timer (OST)

The Oscillator Start-up Timer (OST) provides a delay of 1024 oscillator cycles (from OSC1 input) after the PWRT delay is over (if PWRT is enabled). This helps to ensure that the crystal oscillator or resonator has started and stabilized.

The OST time-out is invoked only for XT, LP and HS modes and only on Power-on Reset or wake-up from Sleep.

14.8 Brown-out Reset (BOR)

The configuration bit, BODEN, can enable or disable the Brown-out Reset circuit. If VDD falls below VBOR (parameter D005, about 4V) for longer than TBOR (parameter #35, about 100 μS), the brown-out situation will reset the device. If VDD falls below VBOR for less than TBOR, a Reset may not occur.

Once the brown-out occurs, the device will remain in Brown-out Reset until VDD rises above VBOR. The Power-up Timer then keeps the device in Reset for TPWRT (parameter #33, about 72 mS). If VDD should fall below VBOR during TPWRT, the Brown-out Reset process will restart when VDD rises above VBOR with the Power-up Timer Reset. The Power-up Timer is always enabled when the Brown-out Reset circuit is enabled, regardless of the state of the PWRT configuration bit.

14.9 Time-out Sequence

On power-up, the time-out sequence is as follows: the PWRT delay starts (if enabled) when a POR Reset occurs. Then, OST starts counting 1024 oscillator cycles when PWRT ends (LP, XT, HS). When the OST ends, the device comes out of Reset.

If $\overline{\text{MCLR}}$ is kept low long enough, the time-outs will expire. Bringing $\overline{\text{MCLR}}$ high will begin execution immediately. This is useful for testing purposes or to synchronize more than one PIC16F87XA device operating in parallel.

Table 14-5 shows the Reset conditions for the Status, PCON and PC registers, while Table 14-6 shows the Reset conditions for all the registers.

© 2001-2013 Microchip Technology Inc.

FIGURE 14-7: TIME-OUT SEQUENCE ON POWER-UP ($\overline{\text{MCLR}}$ NOT TIED TO V_{DD}): CASE 1

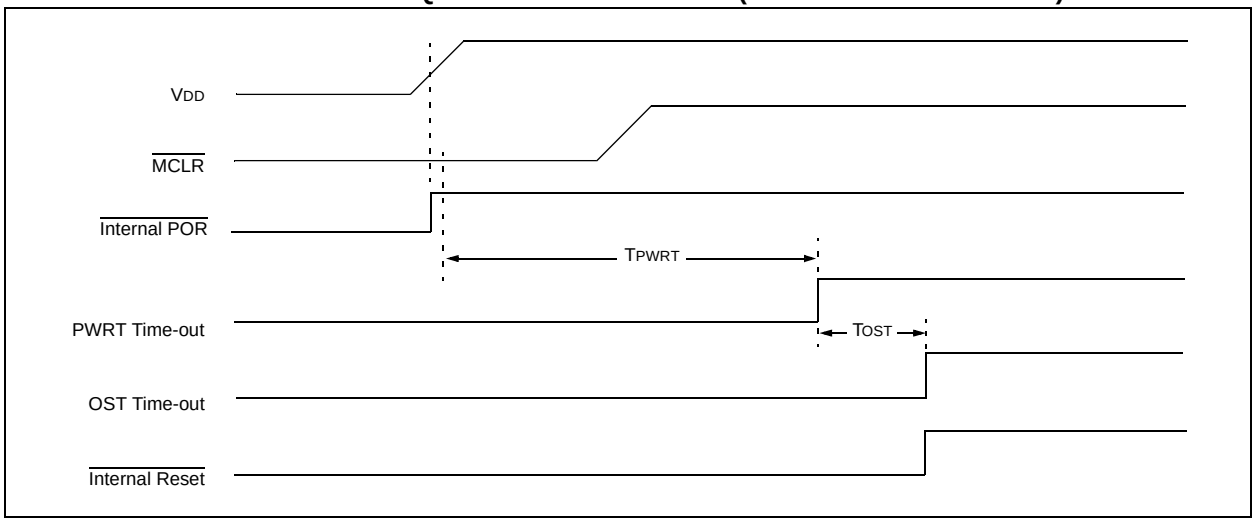

FIGURE 14-8: TIME-OUT SEQUENCE ON POWER-UP ($\overline{\text{MCLR}}$ NOT TIED TO V_{DD}): CASE 2

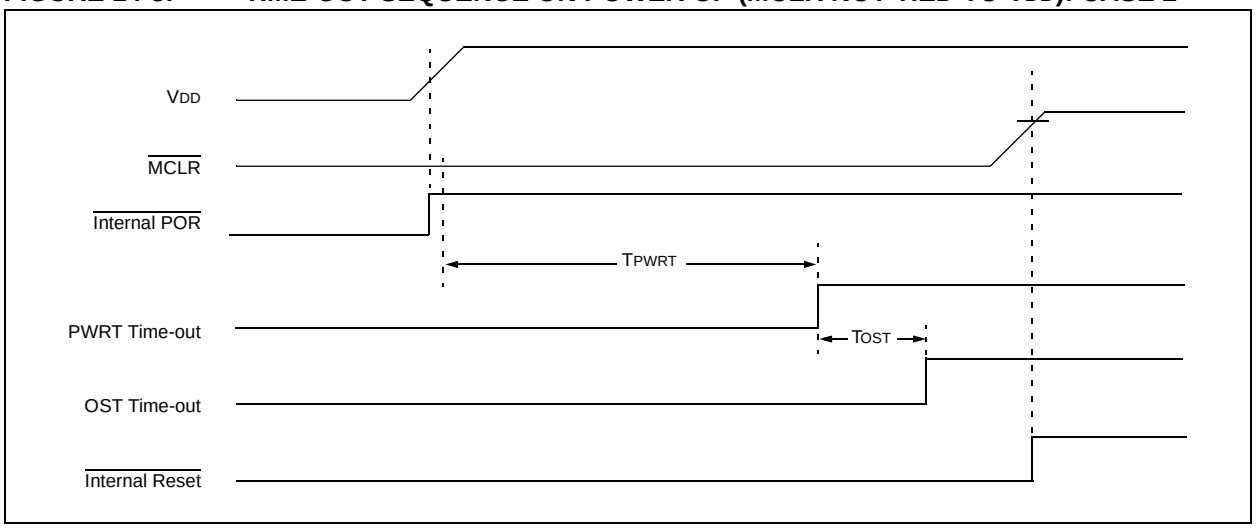

FIGURE 14-9: SLOW RISE TIME ($\overline{\text{MCLR}}$ TIED TO V_{DD} VIA RC NETWORK)

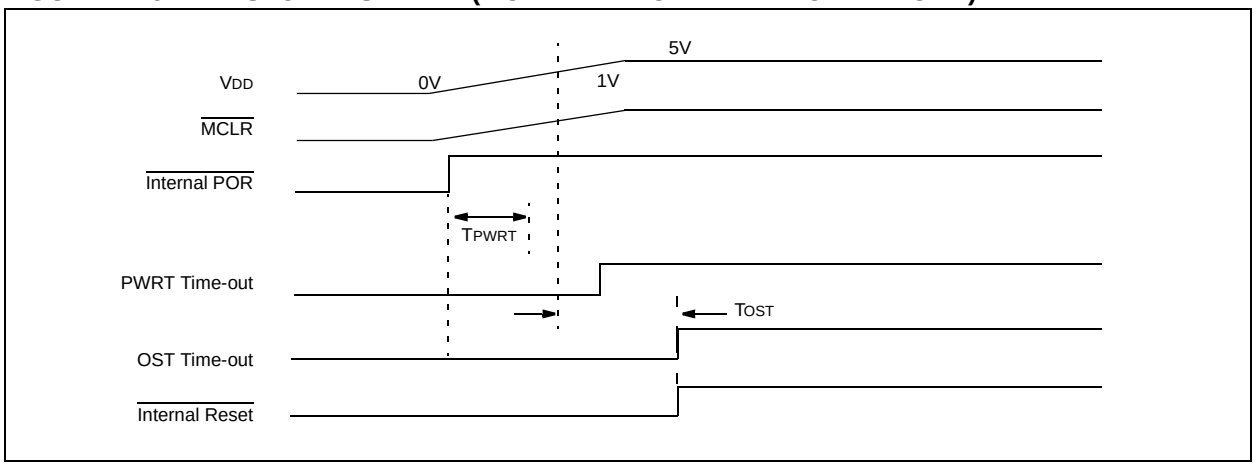

© 2001-2013 Microchip Technology Inc.

TABLE 15-2: PIC16F87XA INSTRUCTION SET

Mnemonic, Operands		Description	Cycles	14-Bit Opcode MSb			LSb	Status Affected	Notes
BYTE-ORIENTED FILE REGISTER OPERATIONS									
ADDWF	f, d	Add W and f	1	00	0111	dfff	ffff	C,DC,Z	1,2
ANDWF	f, d	AND W with f	1	00	0101	dfff	ffff	Z	1,2
CLRF	f	Clear f	1	00	0001	1fff	ffff	Z	2
CLRW	-	Clear W	1	00	0001	0xxx	xxxx	Z	
COMF	f, d	Complement f	1	00	1001	dfff	ffff	Z	1,2
DECF	f, d	Decrement f	1	00	0011	dfff	ffff	Z	1,2
DECFSZ	f, d	Decrement f, Skip if 0	1(2)	00	1011	dfff	ffff		1,2,3
INCF	f, d	Increment f	1	00	1010	dfff	ffff	Z	1,2
INCFSZ	f, d	Increment f, Skip if 0	1(2)	00	1111	dfff	ffff		1,2,3
IORWF	f, d	Inclusive OR W with f	1	00	0100	dfff	ffff	Z	1,2
MOVF	f, d	Move f	1	00	1000	dfff	ffff	Z	1,2
MOVWF	f	Move W to f	1	00	0000	1fff	ffff		
NOP	-	No Operation	1	00	0000	0xx0	0000		
RLF	f, d	Rotate Left f through Carry	1	00	1101	dfff	ffff	C	1,2
RRF	f, d	Rotate Right f through Carry	1	00	1100	dfff	ffff	C	1,2
SUBWF	f, d	Subtract W from f	1	00	0010	dfff	ffff	C,DC,Z	1,2
SWAPF	f, d	Swap nibbles in f	1	00	1110	dfff	ffff		1,2
XORWF	f, d	Exclusive OR W with f	1	00	0110	dfff	ffff	Z	1,2
BIT-ORIENTED FILE REGISTER OPERATIONS									
BCF	f, b	Bit Clear f	1	01	00bb	bfff	ffff		1,2
BSF	f, b	Bit Set f	1	01	01bb	bfff	ffff		1,2
BTFSC	f, b	Bit Test f, Skip if Clear	1 (2)	01	10bb	bfff	ffff		3
BTFSS	f, b	Bit Test f, Skip if Set	1 (2)	01	11bb	bfff	ffff		3
LITERAL AND CONTROL OPERATIONS									
ADDLW	k	Add Literal and W	1	11	111x	kkkk	kkkk	C,DC,Z	
ANDLW	k	AND Literal with W	1	11	1001	kkkk	kkkk	Z	
CALL	k	Call Subroutine	2	10	0kkk	kkkk	kkkk		
CLRWDT	-	Clear Watchdog Timer	1	00	0000	0110	0100	$\overline{TO}$,$\overline{PD}$	
GOTO	k	Go to Address	2	10	1kkk	kkkk	kkkk		
IORLW	k	Inclusive OR Literal with W	1	11	1000	kkkk	kkkk	Z	
MOVLW	k	Move Literal to W	1	11	00xx	kkkk	kkkk		
RETFIE	-	Return from Interrupt	2	00	0000	0000	1001		
RETLW	k	Return with Literal in W	2	11	01xx	kkkk	kkkk		
RETURN	-	Return from Subroutine	2	00	0000	0000	1000		
SLEEP	-	Go into Standby mode	1	00	0000	0110	0011	$\overline{TO}$,$\overline{PD}$	
SUBLW	k	Subtract W from Literal	1	11	110x	kkkk	kkkk	C,DC,Z	
XORLW	k	Exclusive OR Literal with W	1	11	1010	kkkk	kkkk	Z	

Note 1: When an I/O register is modified as a function of itself (e.g., `MOVF PORTB, 1`), the value used will be that value present on the pins themselves. For example, if the data latch is '`1`' for a pin configured as input and is driven low by an external device, the data will be written back with a '`0`'.

2: If this instruction is executed on the TMR0 register (and where applicable, d = `1`), the prescaler will be cleared if assigned to the Timer0 module.

3: If Program Counter (PC) is modified, or a conditional test is true, the instruction requires two cycles. The second cycle is executed as a `NOP`.

Note: Additional information on the mid-range instruction set is available in the PIC® Mid-Range MCU Family Reference Manual (DS33023).

© 2001-2013 Microchip Technology Inc.

I

I/O Ports 41
I2C Bus Data Requirements 192
I^{2}C Bus Start/Stop Bits Requirements 191
I^{2}C Mode
    Registers 80
I^{2}C Mode 80
    $\overline{\text{ACK}}$ Pulse 84, 85
    Acknowledge Sequence Timing 104
    Baud Rate Generator 97
    Bus Collision
        Repeated Start Condition 108
        Start Condition 106
        Stop Condition 109
    Clock Arbitration 98
    Effect of a Reset 105
    General Call Address Support 94
    Master Mode 95
        Operation 96
        Repeated Start Timing 100
    Master Mode Reception 101
    Master Mode Start Condition 99
    Master Mode Transmission 101
    Multi-Master Communication, Bus Collision
        and Arbitration 105
    Multi-Master Mode 105
    Read/Write Bit Information (R/$\overline{\text{W}}$ Bit) 84, 85
    Serial Clock (RC3/SCK/SCL) 85
    Slave Mode 84
        Addressing 84
        Reception 85
        Transmission 85
    Sleep Operation 105
    Stop Condition Timing 104
ID Locations 143, 157
In-Circuit Debugger 143, 157
    Resources 157
In-Circuit Serial Programming (ICSP) 143, 158
INDF Register 19, 20, 31
Indirect Addressing 31
    FSR Register 16
Instruction Format 159
Instruction Set 159
    ADDLW 161
    ADDWF 161
    ANDLW 161
    ANDWF 161
    BCF 161
    BSF 161
    BTFSC 161
    BTFSS 161
    CALL 162
    CLRF 162
    CLRW 162
    CLRWDT 162
    COMF 162
    DECF 162
    DECFSZ 163
    GOTO 163
    INCF 163
    INCFSZ 163
    IORLW 163
    IORWF 163
    RETURN 164
    RLF 164
    RRF 164
    SLEEP 164
    SUBLW 164
    SUBWF 164
    SWAPF 165
    XORLW 165
    XORWF 165
    Summary Table 160
INT Interrupt (RB0/INT). *See* Interrupt Sources.
INTCON Register 24
    GIE Bit 24
    INTE Bit 24
    INTF Bit 24
    PEIE Bit 24
    RBIE Bit 24
    RBIF Bit 24, 44
    TMR0IE Bit 24
    TMR0IF Bit 24
Inter-Integrated Circuit. *See* I^{2}C.
Internal Reference Signal 137
Internal Sampling Switch (Rss) Impedance 130
Interrupt Sources 143, 153
    Interrupt-on-Change (RB7:RB4) 44
    RB0/INT Pin, External 9, 11, 154
    TMR0 Overflow 154
    USART Receive/Transmit Complete 111
Interrupts
    Bus Collision Interrupt 28
    Synchronous Serial Port Interrupt 26
Interrupts, Context Saving During 154
Interrupts, Enable Bits
    Global Interrupt Enable (GIE Bit) 24, 153
    Interrupt-on-Change (RB7:RB4)
        Enable (RBIE Bit) 24, 154
    Peripheral Interrupt Enable (PEIE Bit) 24
    RB0/INT Enable (INTE Bit) 24
    TMR0 Overflow Enable (TMR0IE Bit) 24
Interrupts, Flag Bits
    Interrupt-on-Change (RB7:RB4) Flag
        (RBIF Bit) 24, 44, 154
    RB0/INT Flag (INTF Bit) 24
    TMR0 Overflow Flag (TMR0IF Bit) 24, 154

L

Loading of PC 30
Low-Voltage ICSP Programming 158
Low-Voltage In-Circuit Serial Programming 143

M

Master Clear ($\overline{\text{MCLR}}$) 8
    $\overline{\text{MCLR}}$ Reset, Normal Operation 147, 149, 150
    $\overline{\text{MCLR}}$ Reset, Sleep 147, 149, 150
Master Synchronous Serial Port (MSSP). *See* MSSP.
$\overline{\text{MCLR}}$ 148
$\overline{\text{MCLR}}$/VPP 10
Memory Organization 15
    Data EEPROM Memory 33
    Data Memory 16
    Flash Program Memory 33
    Program Memory 15
MPLAB ASM30 Assembler, Linker, Librarian 168
MPLAB ICD 2 In-Circuit Debugger 169
MPLAB ICE 2000 High-Performance Universal
    In-Circuit Emulator 169

Power-up Timer (PWRT) 148
PR2 Register 20, 61
Prescaler, Timer0
    Assignment (PSA Bit) 23
    Rate Select (PS2:PS0 Bits) 23
PRO MATE II Universal Device Programmer 169
Program Counter
    Reset Conditions 149
Program Memory 15
    Interrupt Vector 15
    Paging 30
    Program Memory Map and Stack
        (PIC16F873A/874A) 15
    Program Memory Map and Stack
        (PIC16F876A/877A) 15
    Reset Vector 15
Program Verification 157
Programming Pin (VPP) 8
Programming, Device Instructions 159
PSP. *See* Parallel Slave Port.
Pulse Width Modulation. *See* Capture/Compare/PWM,
    PWM Mode.
PUSH 30

R

RA0/AN0 Pin 8, 10
RA1/AN1 Pin 8, 10
RA2/AN2/VREF-/CVREF Pin 8, 10
RA3/AN3/VREF+ Pin 8, 10
RA4/T0CKI/C1OUT Pin 8, 10
RA5/AN4/$\overline{SS}$/C2OUT Pin 8, 10
RAM. *See* Data Memory.
RB0/INT Pin 9, 11
RB1 Pin 9, 11
RB2 Pin 9, 11
RB3/PGM Pin 9, 11
RB4 Pin 9, 11
RB5 Pin 9, 11
RB6/PGC Pin 9, 11
RB7/PGD Pin 9, 11
RC0/T1OSO/T1CKI Pin 9, 12
RC1/T1OSI/CCP2 Pin 9, 12
RC2/CCP1 Pin 9, 12
RC3/SCK/SCL Pin 9, 12
RC4/SDI/SDA Pin 9, 12
RC5/SDO Pin 9, 12
RC6/TX/CK Pin 9, 12
RC7/RX/DT Pin 9, 12
RCREG Register 19
RCSTA Register 19
    ADDEN Bit 112
    CREN Bit 112
    FERR Bit 112
    OERR Bit 112
    RX9 Bit 112
    RX9D Bit 112
    SPEN Bit 111, 112
    SREN Bit 112
RD0/PSP0 Pin 13
RD1/PSP1 Pin 13
RD2/PSP2 Pin 13
RD3/PSP3 Pin 13
RD4/PSP4 Pin 13
RD5/PSP5 Pin 13
RD6/PSP6 Pin 13
RD7/PSP7 Pin 13
RE0/$\overline{RD}$/AN5 Pin 13
RE1/$\overline{WR}$/AN6 Pin 13
RE2/$\overline{CS}$/AN7 Pin 13
Read-Modify-Write Operations 159
Register File 16
Register File Map (PIC16F873A/874A) 18
Register File Map (PIC16F876A/877A) 17
Registers
    ADCON0 (A/D Control 0) 127
    ADCON1 (A/D Control 1) 128
    CCP1CON/CCP2CON (CCP Control 1
        and CCP Control 2) 64
    CMCON (Comparator Control) 135
    CVRCON (Comparator Voltage
        Reference Control) 141
    EECON1 (EEPROM Control 1) 34
    FSR 31
    INTCON 24
    OPTION_REG 23, 54
    PCON (Power Control) 29
    PIE1 (Peripheral Interrupt Enable 1) 25
    PIE2 (Peripheral Interrupt Enable 2) 27
    PIR1 (Peripheral Interrupt Request 1) 26
    PIR2 (Peripheral Interrupt Request 2) 28
    RCSTA (Receive Status and Control) 112
    Special Function, Summary 19
    SSPCON (MSSP Control 1, I^{2}C Mode) 82
    SSPCON (MSSP Control 1, SPI Mode) 73
    SSPCON2 (MSSP Control 2, I^{2}C Mode) 83
    SSPSTAT (MSSP Status, I^{2}C Mode) 81
    SSPSTAT (MSSP Status, SPI Mode) 72
    Status 22
    T1CON (Timer1 Control) 57
    T2CON (Timer2 Control) 61
    TRISE Register 50
    TXSTA (Transmit Status and Control) 111
Reset 143, 147
    Brown-out Reset (BOR). *See* Brown-out Reset (BOR).
    $\overline{MCLR}$ Reset. *See* $\overline{MCLR}$.
    Power-on Reset (POR). *See* Power-on Reset (POR).
    Reset Conditions for PCON Register 149
    Reset Conditions for Program Counter 149
    Reset Conditions for Status Register 149
    WDT Reset. *See* Watchdog Timer (WDT).
Reset, Watchdog Timer, Oscillator Start-up Timer,
    Power-up Timer and Brown-out Reset
    Requirements 184
Revision History 219

S

SCI. *See* USART.
SCK 71
SDI 71
SDO 71
Serial Clock, SCK 71
Serial Communication Interface. *See* USART.
Serial Data In, SDI 71
Serial Data Out, SDO 71
Serial Peripheral Interface. *See* SPI.
Slave Select Synchronization 77
Slave Select, $\overline{SS}$ 71
Sleep 143, 147, 156
Software Simulator (MPLAB SIM) 168
Software Simulator (MPLAB SIM30) 168
SPBRG Register 20
Special Features of the CPU 143