Welcome to E-XFL.COM

What is "Embedded - Microcontrollers"?

"Embedded - Microcontrollers" refer to small, integrated circuits designed to perform specific tasks within larger systems. These microcontrollers are essentially compact computers on a single chip, containing a processor core, memory, and programmable input/output peripherals. They are called "embedded" because they are embedded within electronic devices to control various functions, rather than serving as standalone computers. Microcontrollers are crucial in modern electronics, providing the intelligence and control needed for a wide range of applications.

Applications of "Embedded - Microcontrollers"

Details	
Product Status	Not For New Designs
Core Processor	RX
Core Size	32-Bit Single-Core
Speed	100MHz
Connectivity	CANbus, EBI/EMI, I²C, LINbus, SCI, SPI, USB
Peripherals	DMA, LVD, POR, PWM, WDT
Number of I/O	57
Program Memory Size	384KB (384K x 8)
Program Memory Type	FLASH
EEPROM Size	32K x 8
RAM Size	32K x 8
Voltage - Supply (Vcc/Vdd)	2.7V ~ 3.6V
Data Converters	A/D 12x10b, 8x12b; D/A 2x10b
Oscillator Type	Internal
Operating Temperature	-40°C ~ 85°C (TA)
Mounting Type	Surface Mount
Package / Case	100-LQFP
Supplier Device Package	100-LFQFP (14x14)
Purchase URL	https://www.e-xfl.com/product-detail/renesas-electronics-america/r5f563tcbdfp-v1

Table 1.1 Outline of Specifications (7/7)

Classification	Module/Function	Description
Operating temperature		D version: -40 to +85°C, G version: -40 to +105°C *1
Package		144-pin LQFP (PLQP0144KA-A (20 × 20, 0.5-mm pitch)) 120-pin LQFP (PLQP0120KA-A (16 × 16, 0.5-mm pitch)) 112-pin LQFP (PLQP0112JA-A (20 × 20, 0.65-mm pitch)) 100-pin LQFP (PLQP0100KB-A (14 × 14, 0.5-mm pitch)) 64-pin LQFP (PLQP0064KB-A (10 × 10, 0.5-mm pitch)) 48-pin LQFP (PLQP0048KB-A (07 × 07, 0.5-mm pitch))
On-chip debugging system		• E1 emulator (JTAG and FINE interfaces) • E20 emulator (JTAG interface)

Note 1. Please contact Renesas Electronics sales office for derating of operation under Ta = +85°C to +105°C. Derating is the systematic reduction of load for the sake of improved reliability.

Table 1.4 Pin Functions (3/5)

Classifications	Pin Name	I/O	Description
Serial communications interface (SCIc)	Asynchronous mode/clock synchronous mode		
	SCK0, SCK1, SCK2, SCK3	I/O	Input/output pins for clock signals.
	RXD0, RXD1, RXD2, RXD3	Input	Input pins for data reception.
	TXD0, TXD1, TXD2, TXD3	Output	Output pins for data transmission.
	CTS0#, CTS1#, CTS2#, CTS3#	Input	Transmit/receive start control input pins
	RTS0#, RTS1#, RTS2#, RTS3#	Output	Transmit/receive start control output pins
	Simple I^2C mode		
	SSCL0, SSCL1, SSCL2, SSCL3	I/O	Input/output pins for the I^2C clock
	SSDA0, SSDA1, SSDA2, SSDA3	I/O	Input/output pins for the I^2C data
	Simple SPI mode		
	SCK0, SCK1, SCK2, SCK3	I/O	Input/output pins for the clock
	SMISO0, SMISO1, SMISO2, SMISO3	I/O	Input/output pins for slave transmit data.
	SMOSI0, SMOSI1, SMOSI2, SMOSI3	I/O	Input/output pins for master transmit data.
	SS0#, SS1#, SS2#, SS3#	Input	Input pins for chip select signals
Serial communications interface (SCId)	Asynchronous mode/clock synchronous mode		
	SCK12	I/O	Input/output pin for clock signals.
	RXD12	Input	Input pin for data reception.
	TXD12	Output	Output pin for data transmission.
	CTS12#	Input	Transmit/receive start control input pins
	RTS12#	Output	Transmit/receive start control output pins
	Simple I^2C mode		
	SSCL12	I/O	Input/output pins for the I^2C clock
	SSDA12	I/O	Input/output pins for the I^2C data
	Simple SPI mode		
	SCK12	I/O	Input/output pins for the clock
	SMISO12	I/O	Input/output pins for slave transmit data.
	SMOSI12	I/O	Input/output pins for master transmit data.
	SS12#	Input	Input pins for chip select signals
	Extended serial mode		
	RXDX12	Input	Input pin for receive data
	TXDX12	Output	Output pin for transmit data
	SIOX12	I/O	Input/output pin for transfer data
I^2C bus interface	SCL, SCL0, SCL1	I/O	Clock input/output pin. N-channel open drain can directly drive buses.
	SDA, SDA0, SDA1	I/O	Data input/output pin. N-channel open drain can directly drive buses.

Table 1.4 Pin Functions (5/5)

Classifications	Pin Name	I/O	Description
I/O ports	P00 to P05	I/O	6-bit input/output pins
	P10 to P14	I/O	5-bit input/output pins
	P20 to P26	I/O	7-bit input/output pins
	P30 to P35	I/O	6-bit input/output pins
	P40 to P47	Input	8-bit input pins
	P50 to P57	Input	8-bit input pins
	P60 to P65	Input	6-bit input pins
	P70 to P76	I/O	7-bit input/output pins
	P80 to P82	I/O	3-bit input/output pins
	P90 to P96	I/O	7-bit input/output pins
	PA0 to PA6	I/O	7-bit input/output pins
	PB0 to PB7	I/O	8-bit input/output pins
	PC0 to PC5	Input	6-bit input pins
	PD0 to PD7	I/O	8-bit input/output pins
	PE0, PE1, PE3 to PE5	I/O	6-bit input/output pins
	PE2	Input	1-bit input pin
	PF0 to PF4	I/O	5-bit input/output pins
	PG0 to PG6	I/O	7-bit input/output pins

Table 1.5 List of Pins and Pin Functions (144-Pin LQFP) (2/4)

Pin Number 144-Pin LQFP	Power Supply Clock System Control	I/O Port	Bus	Timer (MTU3, GPT, POE3, CAC)	Communications (SCIc, SCId, RSPI, RIIC, CAN, USB)	Interrupt	S12ADB, AD, DA
39		PB6	A18		RXD12/SMISO12/ SSCL12/RXDX12/ CRX1	IRQ2	
40		PB5	A17		TXD12/SMOSI12/ SSDA12/TXDX12/ SIOX12/ CTX1		
41	PLLVCC						
42		PB4	A16	POE8#/ GTETRG0		IRQ3-DS	
43	PLLVSS						
44	TDI				RXD1*1		
45	TCK/FINEC						
46	TDO				TXD1*1		
47		PB3	A15	MTIOC0A/CACREF	SCK0		
48		PB2		MTIOC0B	TXD0/SMOSI0/ SSDA0/SDA0		
49		PB1		MTIOC0C	RXD0/SMISO0/ SSCL0/SCL0	IRQ4	
50		PB0	A14	MTIOC0D	MOSIA/MOSIB		
51	TRDATA1	PA6	CS3#		CTS3#/RTS3#/SS3#		
52		PA5		MTIOC1A	RXD0/SMISO0/ SSCL0/ MISOA/MISOB		ADTRG1#
53		PA4		MTIOC1B	TXD0/SMOSI0/ SSDA0/SMOSI0/ RSPCKA/RSPCKB		ADTRG0#
54		PA3		MTIOC2A	SCK0/SSLA0/SSLB0		
55		PA2		MTIOC2B	RXD2/SMISO2/ SSCL2/ SSLA1/SSLB1		
56		PA1		MTIOC6A	TXD2/SMOSI2/ SSDA2/SMOSI2/ SSLA2/SSLB2		
57		PA0		MTIOC6C	SCK2/SSLA3/SSLB3		
58	TRDATA0	P35			TXD3/SMOSI3/SSDA3		
59	TRCLK	P34		GTETRG1	RXD3/SMISO3/SSCL3	IRQ3	
60	VCC						
61		P96	A13	POE4#	RXD1/SMISO1/SSCL1	IRQ4-DS	
62		PG6	CS2#		SCK1		
63	VSS						
64		P95		MTIOC6B/GTIOC4A	TXD1/SMOSI1/SSDA1		
65		P94		MTIOC7A/GTIOC5A	CTS1#/RTS1#/SS1#		
66		P93		MTIOC7B/GTIOC6A	CTS2#/RTS2#/SS2#		
67		P92		MTIOC6D/GTIOC4B			
68		P91		MTIOC7C/GTIOC5B			
69		P90		MTIOC7D/GTIOC6B			
70		PG5		POE12#	SCK3		ADTRG#
71		PG4		GTIOC6B	RXD3/SMISO3/SSCL3	IRQ6	

Table 1.7 List of Pins and Pin Functions (112-Pin LQFP) (1/4)

Pin Number 112-Pin LQFP	Power Supply Clock System Control	I/O Port	Bus	Timer (MTU3, GPT, POE3, CAC)	Communications (SCIc, SCId, RSPI, RIIC, CAN)	Interrupt	S12ADB, AD, DA
1		PE5	BCLK			IRQ0	
2	EMLE						
3	VSS						
4		P01	RD#		CTS0#/RTS0#/SS0#		
5	VCL						
6		P00	CS1#	CACREF			
7	MD/FINED						
8		PE4	A10	POE10#/MTCLKC		IRQ1	
9		PE3	A11	POE11#/MTCLKD		IRQ2-DS	
10	RES#						
11	XTAL						
12	VSS						
13	EXTAL						
14	VCC						
15		PE2		POE10#		NMI	
16		PE1	WR0#/WR#		CTS12#/RTS12#/ SS12#/SSLA3/SSLB3		
17		PE0	WR1#/BC1#/ WAIT#		SSLA2/SSLB2/CRX1	IRQ7	
18		PD7		GTIOC0A	CTS0#/RTS0#/SS0#/ SSLA1/SSLB1/CTX1		
19		PD6		GTIOC0B	SSLA0/SSLB0		
20		PD5		GTIOC1A	RXD1/SMISO1/SSCL1	IRQ6	
21		PD4		GTIOC1B	SCK1		
22		PD3		GTIOC2A	TXD1/SMOSI1/SSDA1		
23		PD2	CS2#	GTIOC2B	MOSIA/MOSIB		
24		PD1	CS0#	GTIOC3A	MISOA/MISOB		
25		PD0	A12	GTIOC3B	RSPCKA/RSPCKB		
26	TDI	PF4	CS3#		RXD1*1		
27	TCK/FINEC	PF3			TXD1/SMOSI1/SSDA1		
28	TDO	PF2	CS1#		RXD1/SMISO1/ SSCL1/TXD1*1	IRQ5	
29		PB7	A19		SCK12		
30		PB6	A18		RXD12/SMISO12/ SSCL12/RXDX12/ CRX1	IRQ2	
31		PB5	A17		TXD12/SMOSI12/ SSDA12/TXDX12/ SIOX12/CTX1		
32	PLLVCC						
33		PB4	A16	POE8#/GTETRG0		IRQ3-DS	
34	PLLVSS						
35		PB3	A15	MTIOC0A/CACREF	SCK0		
36		PB2		MTIOC0B	TXD0/SMOSI0/ SSDA0/SDA0		
37		PB1		MTIOC0C	RXD0/SMISO0/ SSCL0/SCL0	IRQ4	

Table 1.10 List of Pins and Pin Functions (48-Pin LQFP) (2/2)

Pin Number 64-Pin LQFP	Power Supply Clock System Control	I/O Port	POE3	Timer (MTU3, GPT, CAC)	Communications (SCIc, SCId)	Communications (RSPI, RIIC)	Interrupt	S12ADB
26		P74		MTIOC3D GTIOC0B MTIOC6D				
27		P73		MTIOC4B GTIOC2A MTIOC7B				
28		P72		MTIOC4A GTIOC1A MTIOC7A				
29		P71		MTIOC3B GTIOC0A MTIOC6B				
30		P70	POE0#		CTS1# RTS1# SS1#		IRQ5-DS	
31	VCC							
32		P30		MTIOC0B MTCLKD	TXD0 SMOSI0 SSDA0	SSLA0		
33	VSS							
34		P24		MTIC5U MTCLKC	RXD0 SMISO0 SSCL0	RSPCKA		
35		P23		MTIC5V MTCLKB CACREF	SCK0	MOSIA		
36		P22		MTIC5W MTCLKA	CTS0# RTS0# SS0#	MISOA		
37		P47						AN007 CVREFH
38		P44						AN004
39		P43						AN003 CVREFL
40		P42						AN002
41		P41						AN001
42		P40						AN000
43	AVCC0							
44	VREFH0							
45	VREFL0							
46	AVSS0							
47	VCL							
48	EMLE							

2. CPU

The RX CPU has sixteen general-purpose registers, nine control registers, and one accumulator used for DSP instructions.

General-purpose register

b31 … b0
R0 (SP)*1
R1
R2
R3
R4
R5
R6
R7
R8
R9
R10
R11
R12
R13
R14
R15

Control register

b31 … b0	
ISP	(Interrupt stack pointer)
USP	(User stack pointer)
INTB	(Interrupt table register)
PC	(Program counter)
PSW	(Processor status word)
BPC	(Backup PC)
BPSW	(Backup PSW)
FINTV	(Fast interrupt vector register)
FPSW	(Floating-point status word)

DSP instruction register

b63 … b0
ACC (Accumulator)

Note 1. The stack pointer (SP) can be the interrupt stack pointer (ISP) or user stack pointer (USP), according to the value of the U bit in the PSW.

Figure 2.1 Register Set of the CPU

Table 4.1 List of I/O Registers (Address Order) (20/48)

Address	Module Symbol	Register Name	Register Symbol	Number of Bits	Access Size	Number of Access States		Module Name	Remarks
						ICLK ≥ PCLK	ICLK < PCLK		
0008 9873h	AD	A/D Sampling State Register 1	ADSSTR1	8	8	2, 3 PCLKB	2 ICLK	AD	Not present in versions with 64 or 48 pins.
0008 9874h	AD	A/D Sampling State Register 2	ADSSTR2	8	8	2, 3 PCLKB	2 ICLK		Not present in versions with 64 or 48 pins.
0008 9875h	AD	A/D Sampling State Register 3	ADSSTR3	8	8	2, 3 PCLKB	2 ICLK		Not present in versions with 64 or 48 pins.
0008 9876h	AD	A/D Sampling State Register 4	ADSSTR4	8	8	2, 3 PCLKB	2 ICLK		Not present in versions with 64 or 48 pins.
0008 9877h	AD	A/D Sampling State Register 5	ADSSTR5	8	8	2, 3 PCLKB	2 ICLK		Not present in versions with 64 or 48 pins.
0008 9878h	AD	A/D Sampling State Register 6	ADSSTR6	8	8	2, 3 PCLKB	2 ICLK		Not present in versions with 64 or 48 pins.
0008 9879h	AD	A/D Sampling State Register 7	ADSSTR7	8	8	2, 3 PCLKB	2 ICLK		Not present in versions with 64 or 48 pins.
0008 987Dh	AD	Digital Power Supply Control Circuit Output Register	ADDPCONR	8	8	2, 3 PCLKB	2 ICLK		Not present in versions with 64, or 48 pins.
0008 A000h	SCI0	Serial Mode Register	SMR	8	8	2, 3 PCLKB	2 ICLK	SCIc, SCId	
0008 A001h	SCI0	Bit Rate Register	BRR	8	8	2, 3 PCLKB	2 ICLK		
0008 A002h	SCI0	Serial Control Register	SCR	8	8	2, 3 PCLKB	2 ICLK		
0008 A003h	SCI0	Transmit Data Register	TDR	8	8	2, 3 PCLKB	2 ICLK		
0008 A004h	SCI0	Serial Status Register	SSR	8	8	2, 3 PCLKB	2 ICLK		
0008 A005h	SCI0	Receive Data Register	RDR	8	8	2, 3 PCLKB	2 ICLK		
0008 A006h	SCI0	Smart Card Mode Register	SCMR	8	8	2, 3 PCLKB	2 ICLK		
0008 A007h	SCI0	Serial Extended Mode Register	SEMR	8	8	2, 3 PCLKB	2 ICLK		
0008 A008h	SCI0	Noise Filter Setting Register	SNFR	8	8	2, 3 PCLKB	2 ICLK		
0008 A009h	SCI0	I^2C Mode Register 1	SIMR1	8	8	2, 3 PCLKB	2 ICLK		
0008 A00Ah	SCI0	I^2C Mode Register 2	SIMR2	8	8	2, 3 PCLKB	2 ICLK		
0008 A00Bh	SCI0	I^2C Mode Register 3	SIMR3	8	8	2, 3 PCLKB	2 ICLK		
0008 A00Ch	SCI0	I^2C Status Register	SISR	8	8	2, 3 PCLKB	2 ICLK		
0008 A00Dh	SCI0	SPI Mode Register	SPMR	8	8	2, 3 PCLKB	2 ICLK		
0008 A020h	SCI1	Serial Mode Register	SMR	8	8	2, 3 PCLKB	2 ICLK		
0008 A021h	SCI1	Bit Rate Register	BRR	8	8	2, 3 PCLKB	2 ICLK		
0008 A022h	SCI1	Serial Control Register	SCR	8	8	2, 3 PCLKB	2 ICLK		
0008 A023h	SCI1	Transmit Data Register	TDR	8	8	2, 3 PCLKB	2 ICLK		
0008 A024h	SCI1	Serial Status Register	SSR	8	8	2, 3 PCLKB	2 ICLK		
0008 A025h	SCI1	Receive Data Register	RDR	8	8	2, 3 PCLKB	2 ICLK		
0008 A026h	SCI1	Smart Card Mode Register	SCMR	8	8	2, 3 PCLKB	2 ICLK		
0008 A027h	SCI1	Serial Extended Mode Register	SEMR	8	8	2, 3 PCLKB	2 ICLK		
0008 A028h	SCI1	Noise Filter Setting Register	SNFR	8	8	2, 3 PCLKB	2 ICLK		
0008 A029h	SCI1	I^2C Mode Register 1	SIMR1	8	8	2, 3 PCLKB	2 ICLK		
0008 A02Ah	SCI1	I^2C Mode Register 2	SIMR2	8	8	2, 3 PCLKB	2 ICLK		
0008 A02Bh	SCI1	I^2C Mode Register 3	SIMR3	8	8	2, 3 PCLKB	2 ICLK		
0008 A02Ch	SCI1	I^2C Status Register	SISR	8	8	2, 3 PCLKB	2 ICLK		
0008 A02Dh	SCI1	SPI Mode Register	SPMR	8	8	2, 3 PCLKB	2 ICLK		
0008 A040h	SCI2	Serial Mode Register	SMR	8	8	2, 3 PCLKB	2 ICLK		Not present in versions with 64 or 48 pins.
0008 A041h	SCI2	Bit Rate Register	BRR	8	8	2, 3 PCLKB	2 ICLK		Not present in versions with 64 or 48 pins.
0008 A042h	SCI2	Serial Control Register	SCR	8	8	2, 3 PCLKB	2 ICLK		Not present in versions with 64 or 48 pins.
0008 A043h	SCI2	Transmit Data Register	TDR	8	8	2, 3 PCLKB	2 ICLK		Not present in versions with 64 or 48 pins.
0008 A044h	SCI2	Serial Status Register	SSR	8	8	2, 3 PCLKB	2 ICLK		Not present in versions with 64 or 48 pins.
0008 A045h	SCI2	Receive Data Register	RDR	8	8	2, 3 PCLKB	2 ICLK		Not present in versions with 64 or 48 pins.
0008 A046h	SCI2	Smart Card Mode Register	SCMR	8	8	2, 3 PCLKB	2 ICLK		Not present in versions with 64 or 48 pins.

Table 4.1 List of I/O Registers (Address Order) (27/48)

Address	Module Symbol	Register Name	Register Symbol	Number of Bits	Access Size	Number of Access States		Module Name	Remarks
						ICLK ≥ PCLK	ICLK < PCLK		
0008 C1A3h	MPC	PC3 Pin Function Control Register	PC3PFS	8	8	2, 3 PCLKB	2 ICLK	MPC	Not present in versions with 120, 112, 100, 64, or 48 pins.
0008 C1A4h	MPC	PC4 Pin Function Control Register	PC4PFS	8	8	2, 3 PCLKB	2 ICLK		Not present in versions with 120, 112, 100, 64, or 48 pins.
0008 C1A5h	MPC	PC5 Pin Function Control Register	PC5PFS	8	8	2, 3 PCLKB	2 ICLK		Not present in versions with 120, 112, 100, 64, or 48 pins.
0008 C1A8h	MPC	PD0 Pin Function Control Register	PD0PFS	8	8	2, 3 PCLKB	2 ICLK		Not present in versions with 64 or 48 pins.
0008 C1A9h	MPC	PD1 Pin Function Control Register	PD1PFS	8	8	2, 3 PCLKB	2 ICLK		Not present in versions with 64 or 48 pins.
0008 C1AAh	MPC	PD2 Pin Function Control Register	PD2PFS	8	8	2, 3 PCLKB	2 ICLK		Not present in versions with 64 or 48 pins.
0008 C1ABh	MPC	PD3 Pin Function Control Register	PD3PFS	8	8	2, 3 PCLKB	2 ICLK		
0008 C1ACh	MPC	PD4 Pin Function Control Register	PD4PFS	8	8	2, 3 PCLKB	2 ICLK		
0008 C1ADh	MPC	PD5 Pin Function Control Register	PD5PFS	8	8	2, 3 PCLKB	2 ICLK		
0008 C1AEh	MPC	PD6 Pin Function Control Register	PD6PFS	8	8	2, 3 PCLKB	2 ICLK		
0008 C1AFh	MPC	PD7 Pin Function Control Register	PD7PFS	8	8	2, 3 PCLKB	2 ICLK		
0008 C1B0h	MPC	PE0 Pin Function Control Register	PE0PFS	8	8	2, 3 PCLKB	2 ICLK		Not present in versions with 64 or 48 pins.
0008 C1B1h	MPC	PE1 Pin Function Control Register	PE1PFS	8	8	2, 3 PCLKB	2 ICLK		Not present in versions with 64 or 48 pins.
0008 C1B2h	MPC	PE2 Pin Function Control Register	PE2PFS	8	8	2, 3 PCLKB	2 ICLK		
0008 C1B3h	MPC	PE3 Pin Function Control Register	PE3PFS	8	8	2, 3 PCLKB	2 ICLK		Not present in versions with 64 or 48 pins.
0008 C1B4h	MPC	PE4 Pin Function Control Register	PE4PFS	8	8	2, 3 PCLKB	2 ICLK		Not present in versions with 64 or 48 pins.
0008 C1B5h	MPC	PE5 Pin Function Control Register	PE5PFS	8	8	2, 3 PCLKB	2 ICLK		Not present in versions with 64 or 48 pins.
0008 C1BAh	MPC	PF2 Pin Function Control Register	PF2PFS	8	8	2, 3 PCLKB	2 ICLK		Not present in versions with 100, 64, or 48 pins.
0008 C1BBh	MPC	PF3 Pin Function Control Register	PF3PFS	8	8	2, 3 PCLKB	2 ICLK		Not present in versions with 100, 64, or 48 pins.
0008 C1C0h	MPC	PG0 Pin Function Control Register	PG0PFS	8	8	2, 3 PCLKB	2 ICLK		Not present in versions with 100, 64, or 48 pins.
0008 C1C1h	MPC	PG1 Pin Function Control Register	PG1PFS	8	8	2, 3 PCLKB	2 ICLK		Not present in versions with 100, 64, or 48 pins.
0008 C1C2h	MPC	PG2 Pin Function Control Register	PG2PFS	8	8	2, 3 PCLKB	2 ICLK		Not present in versions with 100, 64, or 48 pins.
0008 C1C3h	MPC	PG3 Pin Function Control Register	PG3PFS	8	8	2, 3 PCLKB	2 ICLK		Not present in versions with 100, 64, or 48 pins.
0008 C1C4h	MPC	PG4 Pin Function Control Register	PG4PFS	8	8	2, 3 PCLKB	2 ICLK		Not present in versions with 100, 64, or 48 pins.
0008 C1C5h	MPC	PG5 Pin Function Control Register	PG5PFS	8	8	2, 3 PCLKB	2 ICLK		Not present in versions with 100, 64, or 48 pins.
0008 C1C6h	MPC	PG6 Pin Function Control Register	PG6PFS	8	8	2, 3 PCLKB	2 ICLK		Not present in versions with 112, 100, 64, or 48 pins.
0008 C1D0h	MPC	USB0_DPUPE Pin Function Control Register	UDPUPEPFS	8	8	2, 3 PCLKB	2 ICLK		Not present in versions with 112, 100, 64, or 48 pins.
0008 C280h	SYSTEM	Deep Standby Control Register	DPSBYCR	8	8	4, 5 PCLKB	2, 3 ICLK	Low Power Consumption	
0008 C282h	SYSTEM	Deep Standby Interrupt Enable Register 0	DPSIER0	8	8	4, 5 PCLKB	2, 3 ICLK		
0008 C284h	SYSTEM	Deep Standby Interrupt Enable Register 2	DPSIER2	8	8	4, 5 PCLKB	2, 3 ICLK		
0008 C286h	SYSTEM	Deep Standby Interrupt Flag Register 0	DPSIFR0	8	8	4, 5 PCLKB	2, 3 ICLK		
0008 C288h	SYSTEM	Deep Standby Interrupt Flag Register 2	DPSIFR2	8	8	4, 5 PCLKB	2, 3 ICLK		
0008 C28Ah	SYSTEM	Deep Standby Interrupt Edge Register 0	DPSIEGR0	8	8	4, 5 PCLKB	2, 3 ICLK		
0008 C28Ch	SYSTEM	Deep Standby Interrupt Edge Register 2	DPSIEGR2	8	8	4, 5 PCLKB	2, 3 ICLK		
0008 C290h	SYSTEM	Reset Status Register 0	RSTSR0	8	8	4, 5 PCLKB	2, 3 ICLK	Resets	
0008 C291h	SYSTEM	Reset Status Register 1	RSTSR1	8	8	4, 5 PCLKB	2, 3 ICLK		

Table 4.1 List of I/O Registers (Address Order) (28/48)

Address	Module Symbol	Register Name	Register Symbol	Number of Bits	Access Size	Number of Access States		Module Name	Remarks
						ICLK ≥ PCLK	ICLK < PCLK		
0008 C293h	SYSTEM	Main Clock Oscillator Forced Oscillation Control Register	MOFCR	8	8	4, 5 PCLKB	2, 3 ICLK	Clock Generation Circuit	
0008 C296h	FLASH	Flash P/E Protection Register	FWEPROR	8	8	4, 5 PCLKB	2, 3 ICLK	ROM	
0008 C297h	SYSTEM	Voltage Monitoring Circuit Control Register	LVCMPCR	8	8	4, 5 PCLKB	2, 3 ICLK	LVDA	
0008 C298h	SYSTEM	Voltage Detection Level Select Register	LVDLVLR	8	8	4, 5 PCLKB	2, 3 ICLK		
0008 C29Ah	SYSTEM	Voltage Monitoring 1 Circuit Control Register 0	LVD1CR0	8	8	4, 5 PCLKB	2, 3 ICLK		
0008 C29Bh	SYSTEM	Voltage Monitoring 2 Circuit Control Register 0	LVD2CR0	8	8	4, 5 PCLKB	2, 3 ICLK		
0008 C2A0h to 0008 C2BFh	SYSTEM	Deep Standby Backup Register 0 to 31	DPSBKR0 to 31	8	8	4, 5 PCLKB	2, 3 ICLK	Low Power Consumption	
0008 C300h	ICU	Group 0 Interrupt Source Register	GRP00	32	32	1, 2 PCLKB	2 ICLK	ICUb	Not present in versions with 64 or 48 pins.
0008 C330h	ICU	Group 12 Interrupt Source Register	GRP12	32	32	1, 2 PCLKB	2 ICLK		
0008 C340h	ICU	Group 0 Interrupt Enable Register	GEN00	32	32	1, 2 PCLKB	2 ICLK		Not present in versions with 64 or 48 pins.
0008 C370h	ICU	Group 12 Interrupt Enable Register	GEN12	32	32	1, 2 PCLKB	2 ICLK		
0008 C380h	ICU	Group 0 Interrupt Clear Register	GCR00	32	32	1, 2 PCLKB	2 ICLK		Not present in versions with 64 or 48 pins.
0008 C4C0h	POE	Input Level Control/Status Register 1	ICSR1	16	8, 16	2, 3 PCLKB	2 ICLK	POE3	
0008 C4C2h	POE	Output Level Control/Status Register 1	OCSR1	16	8, 16	2, 3 PCLKB	2 ICLK		
0008 C4C4h	POE	Input Level Control/Status Register 2	ICSR2	16	8, 16	2, 3 PCLKB	2 ICLK		Not present in versions with 64 or 48 pins.
0008 C4C6h	POE	Output Level Control/Status Register 2	OCSR2	16	8, 16	2, 3 PCLKB	2 ICLK		Not present in versions with 64 or 48 pins.
0008 C4C8h	POE	Input Level Control/Status Register 3	ICSR3	16	8, 16	2, 3 PCLKB	2 ICLK		
0008 C4CAh	POE	Software Port Output Enable Register	SPOER	8	8	2, 3 PCLKB	2 ICLK		
0008 C4CBh	POE	Port Output Enable Control Register 1	POECR1	8	8	2, 3 PCLKB	2 ICLK		
0008 C4CCh	POE	Port Output Enable Control Register 2	POECR2	16	16	2, 3 PCLKB	2 ICLK		
0008 C4CEh	POE	Port Output Enable Control Register 3	POECR3	16	16	2, 3 PCLKB	2 ICLK		
0008 C4D0h	POE	Port Output Enable Control Register 4	POECR4	16	16	2, 3 PCLKB	2 ICLK		
0008 C4D2h	POE	Port Output Enable Control Register 5	POECR5	16	16	2, 3 PCLKB	2 ICLK		
0008 C4D4h	POE	Port Output Enable Control Register 6	POECR6	16	16	2, 3 PCLKB	2 ICLK		
0008 C4D6h	POE	Input Level Control/Status Register 4	ICSR4	16	8, 16	2, 3 PCLKB	2 ICLK		
0008 C4D8h	POE	Input Level Control/Status Register 5	ICSR5	16	8, 16	2, 3 PCLKB	2 ICLK		
0008 C4DAh	POE	Active Level Setting Register 1	ALR1	16	8, 16	2, 3 PCLKB	2 ICLK		
0008 C4DCh	POE	Input Level Control/Status Register 6	ICSR6	16	16	2, 3 PCLKB	2 ICLK		
0008 C4DEh	POE	Active Level Setting Register 2	ALR2	16	8, 16	2, 3 PCLKB	2 ICLK		Not present in versions with 64 or 48 pins.
0008 C4E0h	POE	Input Level Control/Status Register 7	ICSR7	16	8, 16	2, 3 PCLKB	2 ICLK		Not present in versions with 64 or 48 pins.
0008 C4E2h	POE	Port Output Enable Control Register 7	POECR7	16	16	2, 3 PCLKB	2 ICLK		Not present in versions with 64 or 48 pins.
0008 C4E4h	POE	Port Output Enable Control Register 8	POECR8	16	16	2, 3 PCLKB	2 ICLK		Not present in versions with 64 or 48 pins.
0009 1200h to 0009 13FFh	CAN1	Mailbox Register 0 to 31	MB0 to 31	128	8, 16, 32	2, 3 PCLKB	2 ICLK	CAN	Not present in versions with 64 or 48 pins.
0009 1400h to 0009 141Ch	CAN1	Mask Register 0 to 7	MKR0 to 7	32	8, 16, 32	2, 3 PCLKB	2 ICLK		Not present in versions with 64 or 48 pins.
0009 1420h	CAN1	FIFO Received ID Compare Register 0 and 1	FIDCR0	32	8, 16, 32	2, 3 PCLKB	2 ICLK		Not present in versions with 64 or 48 pins.
0009 1424h	CAN1	FIFO Received ID Compare Register 0 and 1	FIDCR1	32	8, 16, 32	2, 3 PCLKB	2 ICLK		Not present in versions with 64 or 48 pins.
0009 1428h	CAN1	Mask Invalid Register	MKIVLR	32	8, 16, 32	2, 3 PCLKB	2 ICLK		Not present in versions with 64 or 48 pins.
0009 142Ch	CAN1	Mailbox Interrupt Enable Register	MIER	32	8, 16, 32	2, 3 PCLKB	2 ICLK		Not present in versions with 64 or 48 pins.
0009 1820h to 0009 183Fh	CAN1	Message Control Register 0 to 31	MCTL0 to 31	8	8	2, 3 PCLKB	2 ICLK		Not present in versions with 64 or 48 pins.

Table 4.1 List of I/O Registers (Address Order) (30/48)

Address	Module Symbol	Register Name	Register Symbol	Number of Bits	Access Size	Number of Access States		Module Name	Remarks
						ICLK ≥ PCLK	ICLK < PCLK		
000A 002Eh	USB0	D1FIFO Port Control Register	D1FIFOCTR	16	16	3, 4 PCLKB	2, 3 ICLK	USBa	Not present in versions with 112, 100, 64, or 48 pins.
000A 0030h	USB0	Interrupt Enable Register 0	INTENB0	16	16	9 PCLKB or more	Rounded up to the nearest integer greater than 1 + 9/(frequency ratio of ICLK/PCLKB)*1		Not present in versions with 112, 100, 64, or 48 pins.
000A 0032h	USB0	Interrupt Enable Register 1	INTENB1	16	16	9 PCLKB or more	Rounded up to the nearest integer greater than 1 + 9/(frequency ratio of ICLK/PCLKB)*1		Not present in versions with 112, 100, 64, or 48 pins.
000A 0036h	USB0	BRDY Interrupt Enable Register	BRDYENB	16	16	9 PCLKB or more	Rounded up to the nearest integer greater than 1 + 9/(frequency ratio of ICLK/PCLKB)*1		Not present in versions with 112, 100, 64, or 48 pins.
000A 0038h	USB0	NRDY Interrupt Enable Register	NRDYENB	16	16	9 PCLKB or more	Rounded up to the nearest integer greater than 1 + 9/(frequency ratio of ICLK/PCLKB)*1		Not present in versions with 112, 100, 64, or 48 pins.
000A 003Ah	USB0	BEMP Interrupt Enable Register	BEMPENB	16	16	9 PCLKB or more	Rounded up to the nearest integer greater than 1 + 9/(frequency ratio of ICLK/PCLKB)*1		Not present in versions with 112, 100, 64, or 48 pins.
000A 003Ch	USB0	SOF Output Configuration Register	SOFCFG	16	16	9 PCLKB or more	Rounded up to the nearest integer greater than 1 + 9/(frequency ratio of ICLK/PCLKB)*1		Not present in versions with 112, 100, 64, or 48 pins.
000A 0040h	USB0	Interrupt Status Register 0	INTSTS0	16	16	9 PCLKB or more	Rounded up to the nearest integer greater than 1 + 9/(frequency ratio of ICLK/PCLKB)*1		Not present in versions with 112, 100, 64, or 48 pins.
000A 0042h	USB0	Interrupt Status Register 1	INTSTS1	16	16	9 PCLKB or more	Rounded up to the nearest integer greater than 1 + 9/(frequency ratio of ICLK/PCLKB)*1		Not present in versions with 112, 100, 64, or 48 pins.
000A 0046h	USB0	BRDY Interrupt Status Register	BRDYSTS	16	16	9 PCLKB or more	Rounded up to the nearest integer greater than 1 + 9/(frequency ratio of ICLK/PCLKB)*1		Not present in versions with 112, 100, 64, or 48 pins.
000A 0048h	USB0	NRDY Interrupt Status Register	NRDYSTS	16	16	9 PCLKB or more	Rounded up to the nearest integer greater than 1 + 9/(frequency ratio of ICLK/PCLKB)*1		Not present in versions with 112, 100, 64, or 48 pins.
000A 004Ah	USB0	BEMP Interrupt Status Register	BEMPSTS	16	16	9 PCLKB or more	Rounded up to the nearest integer greater than 1 + 9/(frequency ratio of ICLK/PCLKB)*1		Not present in versions with 112, 100, 64, or 48 pins.

Table 4.1 List of I/O Registers (Address Order) (38/48)

Address	Module Symbol	Register Name	Register Symbol	Number of Bits	Access Size	Number of Access States		Module Name	Remarks
						ICLK ≥ PCLK	ICLK < PCLK		
000C 211Ah	GPT0	General PWM Timer Compare Capture Register F	GTCCRF	16	16, 32	2 to 5 PCLKA	2, 3 ICLK	GPT	
000C 211Ch	GPT0	General PWM Timer Cycle Setting Register	GTPR	16	16, 32	2 to 5 PCLKA	2, 3 ICLK		
000C 211Eh	GPT0	General PWM Timer Cycle Setting Buffer Register	GTPBR	16	16, 32	2 to 5 PCLKA	2, 3 ICLK		
000C 2120h	GPT0	General PWM Timer Cycle Setting Double-Buffer Register	GTPDBR	16	16, 32	2 to 5 PCLKA	2, 3 ICLK		
000C 2124h	GPT0	A/D Converter Start Request Timing Register A	GTADTRA	16	16, 32	2 to 5 PCLKA	2, 3 ICLK		
000C 2126h	GPT0	A/D Converter Start Request Timing Buffer Register A	GTADTBRA	16	16, 32	2 to 5 PCLKA	2, 3 ICLK		
000C 2128h	GPT0	A/D Converter Start Request Timing Double-Buffer Register A	GTADTDBRA	16	16, 32	2 to 5 PCLKA	2, 3 ICLK		
000C 212Ch	GPT0	A/D Converter Start Request Timing Register B	GTADTRB	16	16, 32	2 to 5 PCLKA	2, 3 ICLK		
000C 212Eh	GPT0	A/D Converter Start Request Timing Buffer Register B	GTADTBRB	16	16, 32	2 to 5 PCLKA	2, 3 ICLK		
000C 2130h	GPT0	A/D Converter Start Request Timing Double-Buffer Register B	GTADTDBRB	16	16, 32	2 to 5 PCLKA	2, 3 ICLK		
000C 2134h	GPT0	General PWM Timer Output Negate Control Register	GTONCR	16	16, 32	2 to 5 PCLKA	2, 3 ICLK		
000C 2136h	GPT0	General PWM Timer Dead Time Control Register	GTDTCR	16	16, 32	2 to 5 PCLKA	2, 3 ICLK		
000C 2138h	GPT0	General PWM Timer Dead Time Value Register U	GTDVU	16	16, 32	2 to 5 PCLKA	2, 3 ICLK		
000C 213Ah	GPT0	General PWM Timer Dead Time Value Register D	GTDVD	16	16, 32	2 to 5 PCLKA	2, 3 ICLK		
000C 213Ch	GPT0	General PWM Timer Dead Time Buffer Register U	GTDBU	16	16, 32	2 to 5 PCLKA	2, 3 ICLK		
000C 213Eh	GPT0	General PWM Timer Dead Time Buffer Register D	GTDBD	16	16, 32	2 to 5 PCLKA	2, 3 ICLK		
000C 2140h	GPT0	General PWM Timer Output Protection Function Status Register	GTSOS	16	16, 32	2 to 5 PCLKA	2, 3 ICLK		
000C 2142h	GPT0	General PWM Timer Output Protection Function Temporary Release Register	GTSOTR	16	16, 32	2 to 5 PCLKA	2, 3 ICLK		
000C 2180h	GPT1	General PWM Timer I/O Control Register	GTIOR	16	8, 16, 32	2 to 5 PCLKA	2, 3 ICLK		
000C 2182h	GPT1	General PWM Timer Interrupt Output Setting Register	GTINTAD	16	8, 16, 32	2 to 5 PCLKA	2, 3 ICLK		
000C 2184h	GPT1	General PWM Timer Control Register	GTCR	16	8, 16, 32	2 to 5 PCLKA	2, 3 ICLK		
000C 2186h	GPT1	General PWM Timer Buffer Enable Register	GTBER	16	8, 16, 32	2 to 5 PCLKA	2, 3 ICLK		
000C 2188h	GPT1	General PWM Timer Count Direction Register	GTUDC	16	8, 16, 32	2 to 5 PCLKA	2, 3 ICLK		
000C 218Ah	GPT1	General PWM Timer Interrupt, A/D Converter Start Request Skipping Setting Register	GTITC	16	8, 16, 32	2 to 5 PCLKA	2, 3 ICLK		
000C 218Ch	GPT1	General PWM Timer Status Register	GTST	16	8, 16, 32	2 to 5 PCLKA	2, 3 ICLK		
000C 218Eh	GPT1	General PWM Timer Counter	GTCNT	16	16	2 to 5 PCLKA	2, 3 ICLK		
000C 2190h	GPT1	General PWM Timer Compare Capture Register A	GTCCRA	16	16, 32	2 to 5 PCLKA	2, 3 ICLK		
000C 2192h	GPT1	General PWM Timer Compare Capture Register B	GTCCRB	16	16, 32	2 to 5 PCLKA	2, 3 ICLK		
000C 2194h	GPT1	General PWM Timer Compare Capture Register C	GTCCRC	16	16, 32	2 to 5 PCLKA	2, 3 ICLK		
000C 2196h	GPT1	General PWM Timer Compare Capture Register D	GTCCRD	16	16, 32	2 to 5 PCLKA	2, 3 ICLK		
000C 2198h	GPT1	General PWM Timer Compare Capture Register E	GTCCRE	16	16, 32	2 to 5 PCLKA	2, 3 ICLK		
000C 219Ah	GPT1	General PWM Timer Compare Capture Register F	GTCCRF	16	16, 32	2 to 5 PCLKA	2, 3 ICLK		
000C 219Ch	GPT1	General PWM Timer Cycle Setting Register	GTPR	16	16, 32	2 to 5 PCLKA	2, 3 ICLK		
000C 219Eh	GPT1	General PWM Timer Cycle Setting Buffer Register	GTPBR	16	16, 32	2 to 5 PCLKA	2, 3 ICLK		
000C 21A0h	GPT1	General PWM Timer Cycle Setting Double-Buffer Register	GTPDBR	16	16, 32	2 to 5 PCLKA	2, 3 ICLK		
000C 21A4h	GPT1	A/D Converter Start Request Timing Register A	GTADTRA	16	16, 32	2 to 5 PCLKA	2, 3 ICLK		

Table 4.1 List of I/O Registers (Address Order) (46/48)

Address	Module Symbol	Register Name	Register Symbol	Number of Bits	Access Size	Number of Access States		Module Name	Remarks
						ICLK ≥ PCLK	ICLK < PCLK		
000C 2AA8h	GPT7	A/D Converter Start Request Timing Double-Buffer Register A	GTADTDBRA	16	16, 32	2 to 5 PCLKA	2, 3 ICLK	GPT	Not present in versions with 64 or 48 pins.
000C 2AACh	GPT7	A/D Converter Start Request Timing Register B	GTADTRB	16	16, 32	2 to 5 PCLKA	2, 3 ICLK		Not present in versions with 64 or 48 pins.
000C 2AAEh	GPT7	A/D Converter Start Request Timing Buffer Register B	GTADTBRB	16	16, 32	2 to 5 PCLKA	2, 3 ICLK		Not present in versions with 64 or 48 pins.
000C 2AB0h	GPT7	A/D Converter Start Request Timing Double-Buffer Register B	GTADTDBRB	16	16, 32	2 to 5 PCLKA	2, 3 ICLK		Not present in versions with 64 or 48 pins.
000C 2AB4h	GPT7	General PWM Timer Output Negate Control Register	GTONCR	16	16, 32	2 to 5 PCLKA	2, 3 ICLK		Not present in versions with 64 or 48 pins.
000C 2AB6h	GPT7	General PWM Timer Dead Time Control Register	GTDTCR	16	16, 32	2 to 5 PCLKA	2, 3 ICLK		Not present in versions with 64 or 48 pins.
000C 2AB8h	GPT7	General PWM Timer Dead Time Value Register U	GTDVU	16	16, 32	2 to 5 PCLKA	2, 3 ICLK		Not present in versions with 64 or 48 pins.
000C 2ABAh	GPT7	General PWM Timer Dead Time Value Register D	GTDVD	16	16, 32	2 to 5 PCLKA	2, 3 ICLK		Not present in versions with 64 or 48 pins.
000C 2ABCh	GPT7	General PWM Timer Dead Time Buffer Register U	GTDBU	16	16, 32	2 to 5 PCLKA	2, 3 ICLK		Not present in versions with 64 or 48 pins.
000C 2ABEh	GPT7	General PWM Timer Dead Time Buffer Register D	GTDBD	16	16, 32	2 to 5 PCLKA	2, 3 ICLK		Not present in versions with 64 or 48 pins.
000C 2AC0h	GPT7	General PWM Timer Output Protection Function Status Register	GTSOS	16	16, 32	2 to 5 PCLKA	2, 3 ICLK		Not present in versions with 64 or 48 pins.
000C 2AC2h	GPT7	General PWM Timer Output Protection Function Temporary Release Register	GTSOTR	16	16, 32	2 to 5 PCLKA	2, 3 ICLK		Not present in versions with 64 or 48 pins.
000C3002h	DPC	Software Start Setting Register 0	SOFTSTART 0	16	16	3 to 5 PCLKA	2, 3 ICLK	DPC	Not present in versions with 64 or 48 pins.
000C3006h	DPC	Software Start Setting Register 1	SOFTSTART 1	16	16	3 to 5 PCLKA	2, 3 ICLK		Not present in versions with 64 or 48 pins.
000C300Ah	DPC	Software Start Setting Register 2	SOFTSTART 2	16	16	3 to 5 PCLKA	2, 3 ICLK		Not present in versions with 64 or 48 pins.
000C300Eh	DPC	Software Start Setting Register 3	SOFTSTART 3	16	16	3 to 5 PCLKA	2, 3 ICLK		Not present in versions with 64 or 48 pins.
000C3012h	DPC	Reference Value Setting Register 0	VOTARGET 0	16	16	3 to 5 PCLKA	2, 3 ICLK		Not present in versions with 64 or 48 pins.
000C3016h	DPC	Reference Value Setting Register 1	VOTARGET 1	16	16	3 to 5 PCLKA	2, 3 ICLK		Not present in versions with 64 or 48 pins.
000C301Ah	DPC	Reference Value Setting Register 2	VOTARGET 2	16	16	3 to 5 PCLKA	2, 3 ICLK		Not present in versions with 64 or 48 pins.
000C301Eh	DPC	Reference Value Setting Register 3	VOTARGET 3	16	16	3 to 5 PCLKA	2, 3 ICLK		Not present in versions with 64 or 48 pins.
000C3022h	DPC	Reference Value Select Register	REFSEL	16	16	3 to 5 PCLKA	2, 3 ICLK		Not present in versions with 64 or 48 pins.
000C3026h	DPC	PWM Channel Setting Register	CHLSEL	16	16	3 to 5 PCLKA	2, 3 ICLK		Not present in versions with 64 or 48 pins.
000C302Ah	DPC	Control Enable Setting Register	ENABLE	16	16	3 to 5 PCLKA	2, 3 ICLK		Not present in versions with 64 or 48 pins.
000C302Eh	DPC	Control Calculation Parameter Setting Register KP0	PARAMKP0	16	16	3 to 5 PCLKA	2, 3 ICLK		Not present in versions with 64 or 48 pins.
000C3032h	DPC	Control Calculation Parameter Setting Register KI0	PARAMKI0	16	16	3 to 5 PCLKA	2, 3 ICLK		Not present in versions with 64 or 48 pins.
000C3036h	DPC	Control Calculation Parameter Setting Register KQ0	PARAMKQ0	16	16	3 to 5 PCLKA	2, 3 ICLK		Not present in versions with 64 or 48 pins.
000C303Ah	DPC	Control Calculation Parameter Setting Register KF0	PARAMKF0	16	16	3 to 5 PCLKA	2, 3 ICLK		Not present in versions with 64 or 48 pins.
000C303Eh	DPC	Control Calculation Parameter Setting Register KP1	PARAMKP1	16	16	3 to 5 PCLKA	2, 3 ICLK		Not present in versions with 64 or 48 pins.
000C3042h	DPC	Control Calculation Parameter Setting Register KI1	PARAMKI1	16	16	3 to 5 PCLKA	2, 3 ICLK		Not present in versions with 64 or 48 pins.
000C3046h	DPC	Control Calculation Parameter Setting Register KQ1	PARAMKQ1	16	16	3 to 5 PCLKA	2, 3 ICLK		Not present in versions with 64 or 48 pins.
000C304Ah	DPC	Control Calculation Parameter Setting Register KF1	PARAMKF1	16	16	3 to 5 PCLKA	2, 3 ICLK		Not present in versions with 64 or 48 pins.
000C304Eh	DPC	Control Calculation Parameter Setting Register KP2	PARAMKP2	16	16	3 to 5 PCLKA	2, 3 ICLK		Not present in versions with 64 or 48 pins.
000C3052h	DPC	Control Calculation Parameter Setting Register KI2	PARAMKI2	16	16	3 to 5 PCLKA	2, 3 ICLK		Not present in versions with 64 or 48 pins.

Table 4.1 List of I/O Registers (Address Order) (48/48)

Address	Module Symbol	Register Name	Register Symbol	Number of Bits	Access Size	Number of Access States		Module Name	Remarks
						ICLK ≥ PCLK	ICLK < PCLK		
007F FFB0h	FLASH	Flash Status Register 0	FSTATR0	8	8	2, 3 FCLK	2, 3 ICLK	ROM	
007F FFB1h	FLASH	Flash Status Register 1	FSTATR1	8	8	2, 3 FCLK	2, 3 ICLK		
007F FFB2h	FLASH	Flash P/E Mode Entry Register	FENTRYR	16	16	2, 3 FCLK	2, 3 ICLK	ROM/ E2 DataFlash Memory	
007F FFB4h	FLASH	Flash Protection Register	FPROTR	16	16	2, 3 FCLK	2, 3 ICLK	ROM	
007F FFB6h	FLASH	Flash Reset Register	FRESETR	16	16	2, 3 FCLK	2, 3 ICLK		
007F FFBAh	FLASH	FCU Command Register	FCMDR	16	16	2, 3 FCLK	2, 3 ICLK		
007F FFC8h	FLASH	FCU Processing Switching Register	FCPSR	16	16	2, 3 FCLK	2, 3 ICLK		
007F FFCAh	FLASH	E2 DataFlash Blank Check Control Register	DFLBCCNT	16	16	2, 3 FCLK	2, 3 ICLK	E2 DataFlash Memory	
007F FFCCh	FLASH	Flash P/E Status Register	FPESTAT	16	16	2, 3 FCLK	2, 3 ICLK	ROM	
007F FFCEh	FLASH	E2 DataFlash Blank Check Status Register	DFLBCSTAT	16	16	2, 3 FCLK	2, 3 ICLK	E2 DataFlash Memory	
007F FFE8h	FLASH	Peripheral Clock Notification Register	PCKAR	16	16	2, 3 FCLK	2, 3 ICLK	ROM	

Note: • This table shows the maximum specifications of I/O registers. The I/O registers of individual products correspond to the list of functions given as Table 1.2. For details, refer to Table 1.2, Comparison of Functions for Different Packages.
Note 1. When the register is accessed while the USB is operating, a delay may be generated in accessing.
Note 2. Odd addresses are not accessible in 16-bit units. Obtain 16-bit access to the two registers by access to the address of TMOCNTL.
Note 3. Pins USB0 and RIIC1 are not present in 112-pin products.
Note 4. Pins USB0, RIIC1, and SCI3 are not present in 100-pin products.
Note 5. Pins GPT4 to GPT7, USB0, RSPI1, RIIC1, SCI2, SCI3, CAN1, AD, and S12AD1 are not present in 64- and 48-pin products.

Note 4. This is calculated from the formula below, where n is the number of cycles set by the PLLWTCR.PSTS[4:0] bits.

$$t_{PLLWT1} = t_{PLL1} + \frac{n + 131072}{f_{PLL}}$$

$$t_{PLLWT2} = t_{PLL2} + \frac{n + 131072}{f_{PLL}} = t_{MAINOSC} + t_{PLL1} + \frac{n + 131072}{f_{PLL}}$$

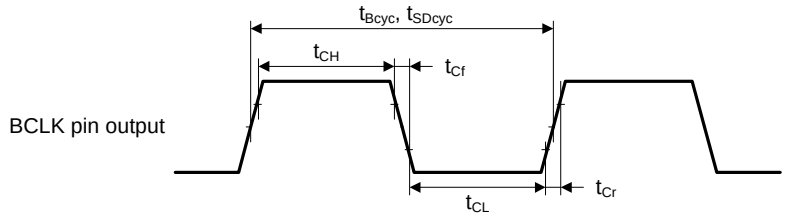

Test conditions: VOH = VCC × 0.7, VOL = VCC × 0.3, IOH = –1.0 mA, IOL = 1.0 mA, C = 30 pF

Figure 5.3 BCLK Pin Output Timing

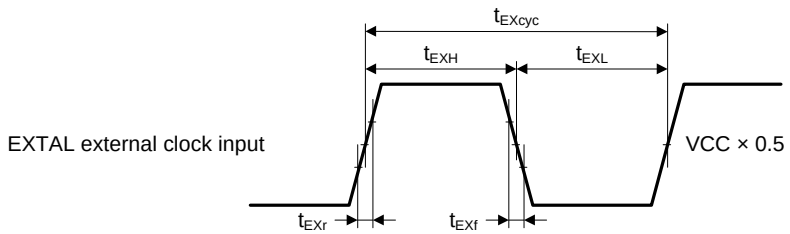

Figure 5.4 EXTAL External Clock Input Timing

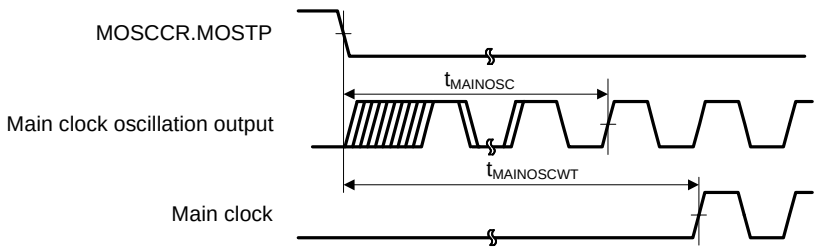

Figure 5.5 Main Clock Oscillation Start Timing

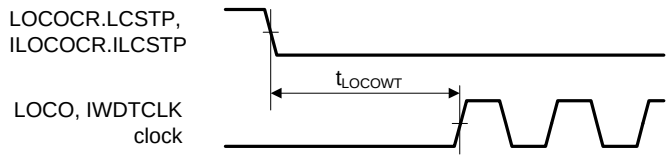

Figure 5.6 LOCO, IWDTCLK Clock Oscillation Start Timing

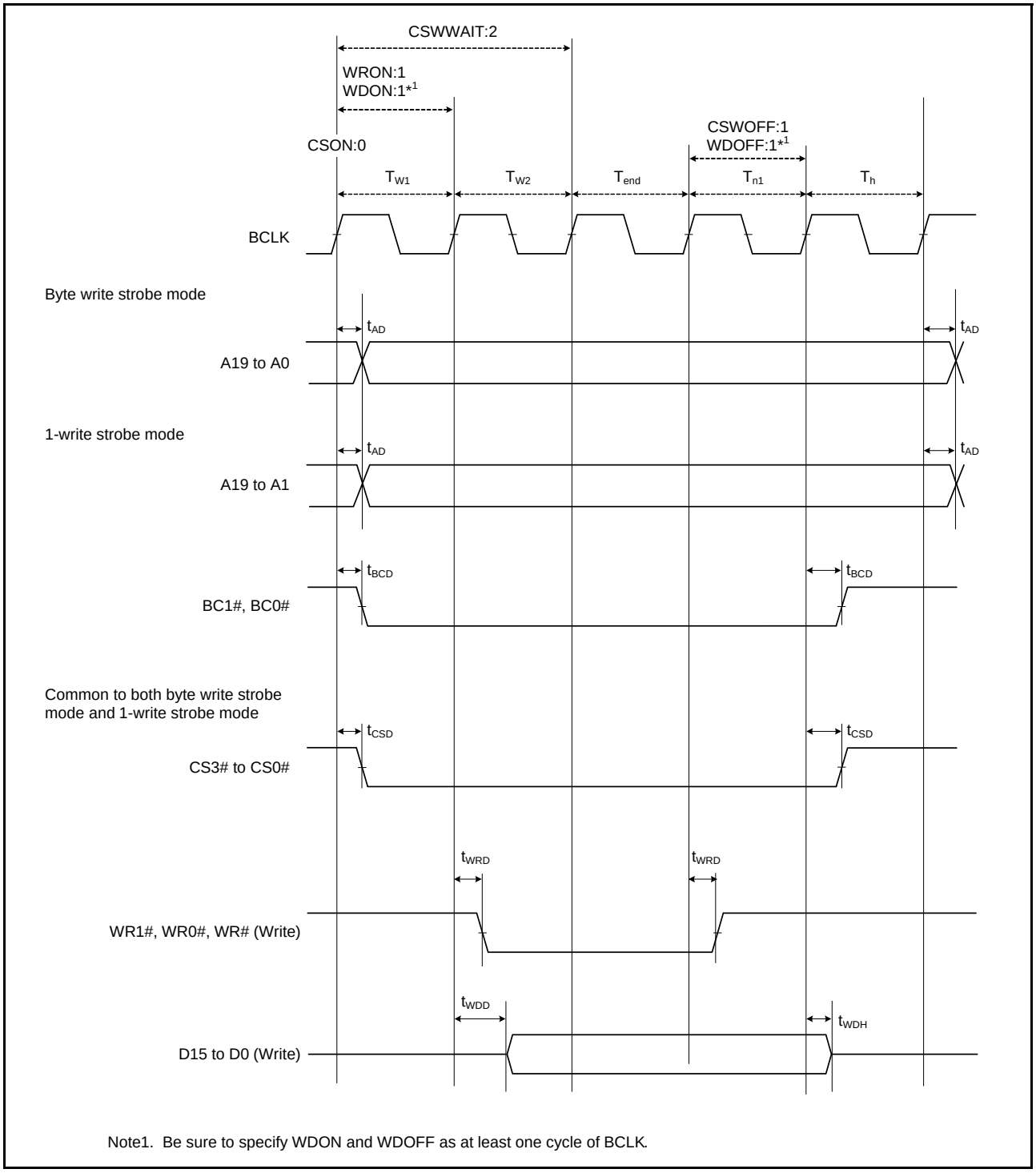

Note1. Be sure to specify WDON and WDOFF as at least one cycle of BCLK.

Figure 5.14 External Bus Timing/Normal Write Cycle (Bus Clock Synchronized)

6.5 Power-on Reset Circuit and Voltage Detection Circuit Characteristics

Table 6.18 Power-on Reset Circuit and Voltage Detection Circuit Characteristics

Conditions: VCC = 2.7 to 3.6 V, VSS = AVSS0 = VREFL0 = 0 V,
AVCC0 = 3.0 to 3.6 V, VREFH0 = 3.0 V to AVCC0,
Ta = T_{opr}

Item		Symbol	Min.	Typ.	Max.	Unit	Test Conditions
Voltage detection level	Power-on reset (POR)	V_{POR}	2.5	2.6	2.7	V	Figure 6.26
	Voltage detection circuit (LVD0)	V_{DET0}	2.7	2.8	2.9		Figure 6.27
	Voltage detection circuit (LVD1)	V_{DET1}	2.80	2.95	3.10		
	Voltage detection circuit (LVD2)	V_{DET2}	2.80	2.95	3.10		
Internal reset time	Power-on reset (POR)	t_{POR}	—	4.6		ms	Figure 6.26
	Voltage detection circuit (LVD0)	t_{LVD0}	—	4.6			Figure 6.27
	Voltage detection circuit (LVD1)	t_{LVD1}	—	0.9			Figure 6.28
	Voltage detection circuit (LVD2)	t_{LVD2}	—	0.9			Figure 6.29
Minimum VCC down time*1		t_{VOFF}	200	—	—	μs	Figure 6.26, Figure 6.27
Response delay time		t_{det}			200	μs	Figure 6.26 to Figure 6.29
LVD operation stabilization time (after LVD is enabled)		$Td_{(E-A)}$			3	μs	Figure 6.28 Figure 6.29
Hysteresis width (LVD1 and LVD2)		V_{LVH}		80		mV	

Note 1. The minimum VCC down time indicates the time when VCC is below the minimum value of voltage detection levels V_{POR}, V_{DET1}, and V_{DET2} for the POR/ LVD.

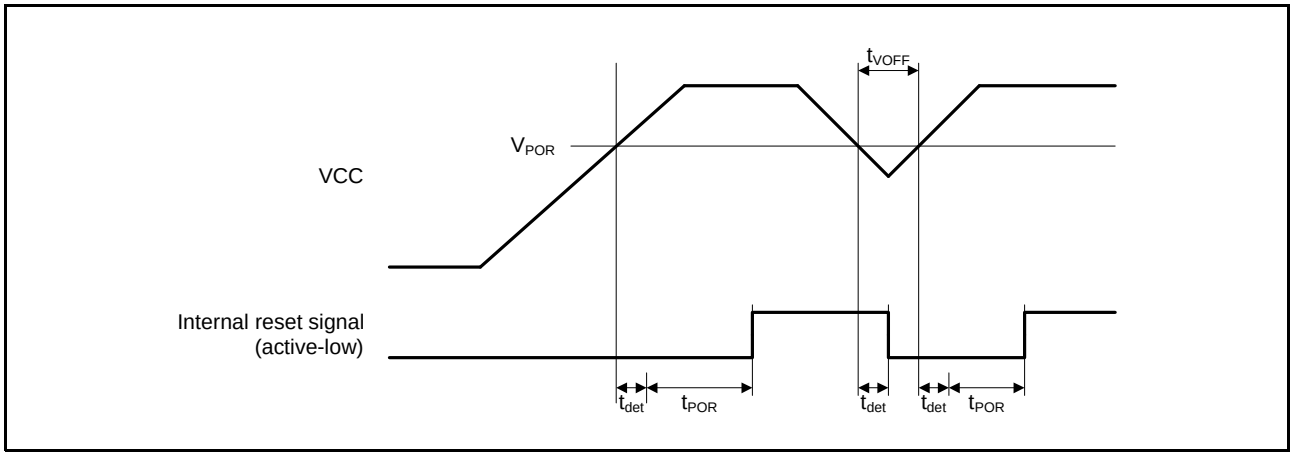

Figure 6.26 Power-on Reset Timing

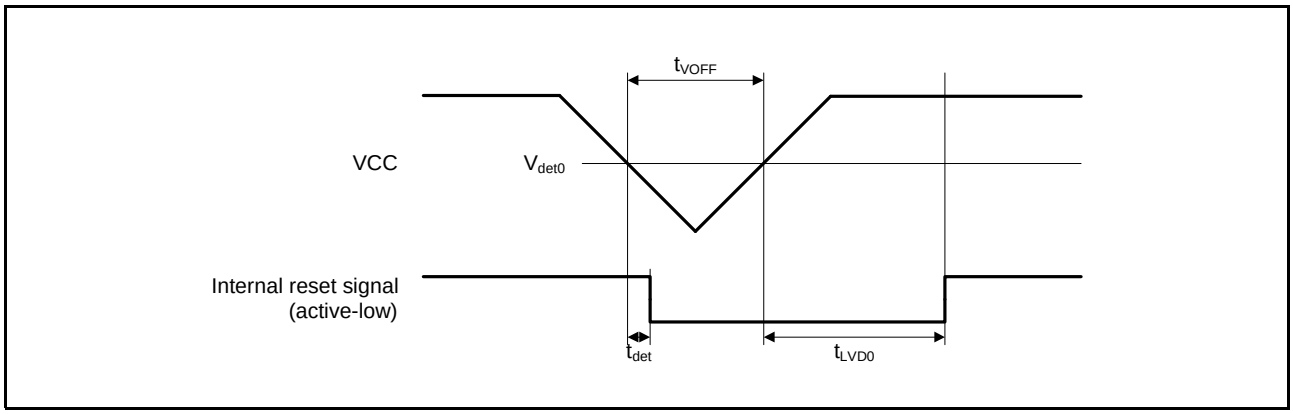

Figure 6.27 Voltage Detection Circuit Timing (V_{det0})

JEITA Package Code	RENESAS Code	Previous Code	MASS[Typ.]
P-LQFP112-20x20-0.65	PLQP0112JA-A	FP-112E/FP-112EV	1.2g

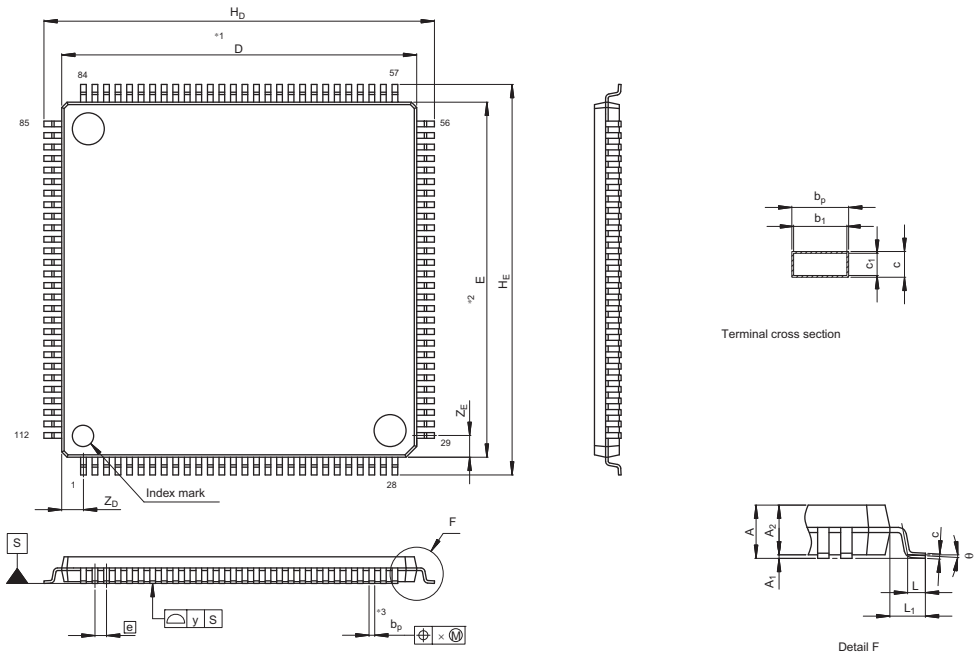

NOTE)
1. DIMENSIONS "*1" AND "*2" DO NOT INCLUDE MOLD FLASH.
2. DIMENSION "*3" DOES NOT INCLUDE TRIM OFFSET.

Reference Symbol	Dimension in Millimeters		
	Min	Nom	Max
D	19.9	20.0	20.1
E	19.9	20.0	20.1
A_2	—	1.4	—
H_D	21.8	22.0	22.2
H_E	21.8	22.0	22.2
A	—	—	1.7
A_1	0.05	0.1	0.15
b_p	0.27	0.32	0.37
b_1	—	0.30	—
c	0.09	0.145	0.20
c_1	—	0.125	—
θ	0°	—	8°
e	—	0.65	—
x	—	—	0.13
y	—	—	0.10
Z_D	—	1.225	—
Z_E	—	1.225	—
L	0.35	0.5	0.65
L_1	—	1.0	—

Figure C 112-Pin LQFP (PLQP0112JA-A)

JEITA Package Code	RENESAS Code	Previous Code	MASS[Typ.]
P-LQFP48-7x7-0.50	PLQP0048KB-A	48P6Q-A	0.2g

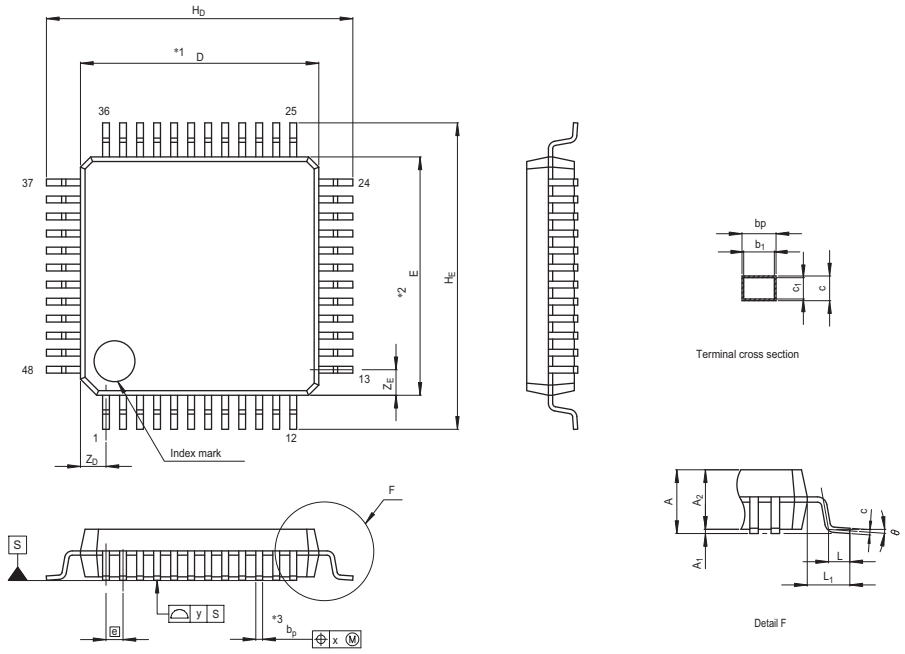

NOTE)
1. DIMENSIONS "*1" AND "*2" DO NOT INCLUDE MOLD FLASH.
2. DIMENSION "*3" DOES NOT INCLUDE TRIM OFFSET.

Reference Symbol	Dimension in Millimeters		
	Min	Nom	Max
D	6.9	7.0	7.1
E	6.9	7.0	7.1
A_2	—	1.4	—
H_D	8.8	9.0	9.2
H_E	8.8	9.0	9.2
A	—	—	1.7
A_1	0	0.1	0.2
b_p	0.17	0.22	0.27
b_1	—	0.20	—
c	0.09	0.145	0.20
c_1	—	0.125	—
θ	0°	—	8°
e	—	0.5	—
x	—	—	0.08
y	—	—	0.10
Z_D	—	0.75	—
Z_E	—	0.75	—
L	0.35	0.5	0.65
L_1	—	1.0	—

Figure F 48-Pin LQFP (PLQP0048KB-A)

General Precautions in the Handling of Microprocessing Unit and Microcontroller Unit Products

The following usage notes are applicable to all Microprocessing unit and Microcontroller unit products from Renesas. For detailed usage notes on the products covered by this document, refer to the relevant sections of the document as well as any technical updates that have been issued for the products.

1. Handling of Unused Pins

   Handle unused pins in accordance with the directions given under Handling of Unused Pins in the manual.

   ¾ The input pins of CMOS products are generally in the high-impedance state. In operation with an unused pin in the open-circuit state, extra electromagnetic noise is induced in the vicinity of LSI, an associated shoot-through current flows internally, and malfunctions occur due to the false recognition of the pin state as an input signal become possible. Unused pins should be handled as described under Handling of Unused Pins in the manual.

2. Processing at Power-on

   The state of the product is undefined at the moment when power is supplied.

   ¾ The states of internal circuits in the LSI are indeterminate and the states of register settings and pins are undefined at the moment when power is supplied.
   In a finished product where the reset signal is applied to the external reset pin, the states of pins are not guaranteed from the moment when power is supplied until the reset process is completed.
   In a similar way, the states of pins in a product that is reset by an on-chip power-on reset function are not guaranteed from the moment when power is supplied until the power reaches the level at which resetting has been specified.

3. Prohibition of Access to Reserved Addresses

   Access to reserved addresses is prohibited.

   ¾ The reserved addresses are provided for the possible future expansion of functions. Do not access these addresses; the correct operation of LSI is not guaranteed if they are accessed.

4. Clock Signals

   After applying a reset, only release the reset line after the operating clock signal has become stable. When switching the clock signal during program execution, wait until the target clock signal has stabilized.

   ¾ When the clock signal is generated with an external resonator (or from an external oscillator) during a reset, ensure that the reset line is only released after full stabilization of the clock signal. Moreover, when switching to a clock signal produced with an external resonator (or by an external oscillator) while program execution is in progress, wait until the target clock signal is stable.

5. Differences between Products

   Before changing from one product to another, i.e. to a product with a different part number, confirm that the change will not lead to problems.

   ¾ The characteristics of Microprocessing unit or Microcontroller unit products in the same group but having a different part number may differ in terms of the internal memory capacity, layout pattern, and other factors, which can affect the ranges of electrical characteristics, such as characteristic values, operating margins, immunity to noise, and amount of radiated noise. When changing to a product with a different part number, implement a system-evaluation test for the given product.