Intel - 5SGTMC5K3F40C1N Datasheet

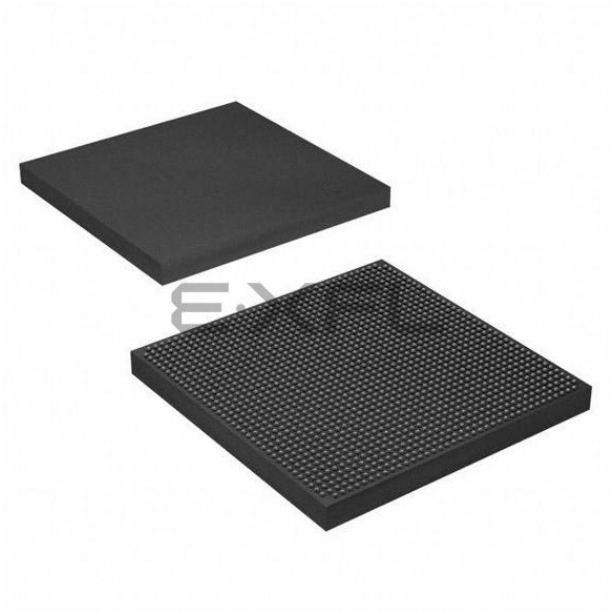

Welcome to E-XFL.COM

Understanding Embedded - FPGAs (Field Programmable Gate Array)

Embedded - FPGAs, or Field Programmable Gate Arrays, are advanced integrated circuits that offer unparalleled flexibility and performance for digital systems. Unlike traditional fixed-function logic devices, FPGAs can be programmed and reprogrammed to execute a wide array of logical operations, enabling customized functionality tailored to specific applications. This reprogrammability allows developers to iterate designs quickly and implement complex functions without the need for custom hardware.

Applications of Embedded - FPGAs

The versatility of Embedded - FPGAs makes them indispensable in numerous fields. In telecommunications.

Details	
Product Status	Obsolete
Number of LABs/CLBs	160500
Number of Logic Elements/Cells	425000
Total RAM Bits	46080000
Number of I/O	600
Number of Gates	-
Voltage - Supply	0.87V ~ 0.93V
Mounting Type	Surface Mount
Operating Temperature	0°C ~ 85°C (TJ)
Package / Case	1517-BBGA, FCBGA
Supplier Device Package	1517-FBGA (40x40)
Purchase URL	https://www.e-xfl.com/product-detail/intel/5sgtmc5k3f40c1n

Table 6. Recommended Operating Conditions for Stratix V Devices (Part 2 of 2)

Symbol	Description	Condition	Min (4)	Typ	Max (4)	Unit
t_{RAMP}	Power supply ramp time	Standard POR	200 µs	—	100 ms	—
		Fast POR	200 µs	—	4 ms	—

Notes toTable 6

(1) V_{CCPD} must be 2.5 V when V_{CCIO} is 2.5, 1.8, 1.5, 1.35, 1.25 or 1.2 V. V_{CCPD} must be 3.0 V when V_{CCIO} is 3.0 V.

(2) If you do not use the design security feature in Stratix V devices, connect V_{CCBAT} to a 1.2- to 3.0-V power supply. Stratix V power-on-reset (POR) circuitry monitors V_{CCBAT}. Stratix V devices will not exit POR if V_{CCBAT} stays at logic low.

(3) C2L and I2L can also be run at 0.90 V for legacy boards that were designed for the C2 and I2 speed grades.

(4) The power supply value describes the budget for the DC (static) power supply tolerance and does not include the dynamic tolerance requirements. Refer to the PDN tool for the additional budget for the dynamic tolerance requirements.

Table 7 lists the transceiver power supply recommended operating conditions for Stratix V GX, GS, and GT devices.

Table 7. Recommended Transceiver Power Supply Operating Conditions for Stratix V GX, GS, and GT Devices (Part 1 of 2)

Symbol	Description	Devices	Minimum (4)	Typical	Maximum (4)	Unit
V_{CCA_GXBL} (1), (3)	Transceiver channel PLL power supply (left side)	GX, GS, GT	2.85	3.0	3.15	V
			2.375	2.5	2.625	
V_{CCA_GXBR} (1), (3)	Transceiver channel PLL power supply (right side)	GX, GS	2.85	3.0	3.15	V
			2.375	2.5	2.625	
V_{CCA_GTBR}	Transceiver channel PLL power supply (right side)	GT	2.85	3.0	3.15	V
V_{CCHIP_L}	Transceiver hard IP power supply (left side; C1, C2, I2, and I3YY speed grades)	GX, GS, GT	0.87	0.9	0.93	V
	Transceiver hard IP power supply (left side; C2L, C3, C4, I2L, I3, I3L, and I4 speed grades)	GX, GS, GT	0.82	0.85	0.88	V
V_{CCHIP_R}	Transceiver hard IP power supply (right side; C1, C2, I2, and I3YY speed grades)	GX, GS, GT	0.87	0.9	0.93	V
	Transceiver hard IP power supply (right side; C2L, C3, C4, I2L, I3, I3L, and I4 speed grades)	GX, GS, GT	0.82	0.85	0.88	V
V_{CCHSSI_L}	Transceiver PCS power supply (left side; C1, C2, I2, and I3YY speed grades)	GX, GS, GT	0.87	0.9	0.93	V
	Transceiver PCS power supply (left side; C2L, C3, C4, I2L, I3, I3L, and I4 speed grades)	GX, GS, GT	0.82	0.85	0.88	V
V_{CCHSSI_R}	Transceiver PCS power supply (right side; C1, C2, I2, and I3YY speed grades)	GX, GS, GT	0.87	0.9	0.93	V
	Transceiver PCS power supply (right side; C2L, C3, C4, I2L, I3, I3L, and I4 speed grades)	GX, GS, GT	0.82	0.85	0.88	V
V_{CCR_GXBL} (2)	Receiver analog power supply (left side)	GX, GS, GT	0.82	0.85	0.88	V
			0.87	0.90	0.93	
			0.97	1.0	1.03	
			1.03	1.05	1.07	

Table 13. OCT Variation after Power-Up Calibration for Stratix V Devices (Part 2 of 2) (1)

Symbol	Description	V_{CCIO} (V)	Typical	Unit
dR/dT	OCT variation with temperature without recalibration	3.0	0.189	%/°C
		2.5	0.208	
		1.8	0.266	
		1.5	0.273	
		1.2	0.317	

Note toTable 13

(1) Valid for a V_{CCIO} range of ±5% and a temperature range of 0° to 85°C.

Pin Capacitance

Table 14 lists the Stratix V device family pin capacitance.

Table 14. Pin Capacitance for Stratix V Devices

Symbol	Description	Value	Unit
C_{IOTB}	Input capacitance on the top and bottom I/O pins	6	pF
C_{IOLR}	Input capacitance on the left and right I/O pins	6	pF
C_{OUTFB}	Input capacitance on dual-purpose clock output and feedback pins	6	pF

Hot Socketing

Table 15 lists the hot socketing specifications for Stratix V devices.

Table 15. Hot Socketing Specifications for Stratix V Devices

Symbol	Description	Maximum
$I_{IOPIN\ (DC)}$	DC current per I/O pin	300 μA
$I_{IOPIN\ (AC)}$	AC current per I/O pin	8 mA (1)
$I_{XCVR\text{-}TX\ (DC)}$	DC current per transceiver transmitter pin	100 mA
$I_{XCVR\text{-}RX\ (DC)}$	DC current per transceiver receiver pin	50 mA

Note toTable 15

(1) The I/O ramp rate is 10 ns or more. For ramp rates faster than 10 ns, $|I_{IOPIN}|$ = C dv/dt, in which C is the I/O pin capacitance and dv/dt is the slew rate.

Table 18. Single-Ended SSTL, HSTL, and HSUL I/O Reference Voltage Specifications for Stratix V Devices

I/O Standard	V_{CCIO} (V)			V_{REF} (V)			V_{TT} (V)		
	Min	Typ	Max	Min	Typ	Max	Min	Typ	Max
SSTL-2 Class I, II	2.375	2.5	2.625	0.49 * V_{CCIO}	0.5 * V_{CCIO}	0.51 * V_{CCIO}	V_{REF} – 0.04	V_{REF}	V_{REF} + 0.04
SSTL-18 Class I, II	1.71	1.8	1.89	0.833	0.9	0.969	V_{REF} – 0.04	V_{REF}	V_{REF} + 0.04
SSTL-15 Class I, II	1.425	1.5	1.575	0.49 * V_{CCIO}	0.5 * V_{CCIO}	0.51 * V_{CCIO}	0.49 * V_{CCIO}	0.5 * VCCIO	0.51 * V_{CCIO}
SSTL-135 Class I, II	1.283	1.35	1.418	0.49 * V_{CCIO}	0.5 * V_{CCIO}	0.51 * V_{CCIO}	0.49 * V_{CCIO}	0.5 * V_{CCIO}	0.51 * V_{CCIO}
SSTL-125 Class I, II	1.19	1.25	1.26	0.49 * V_{CCIO}	0.5 * V_{CCIO}	0.51 * V_{CCIO}	0.49 * V_{CCIO}	0.5 * VCCIO	0.51 * V_{CCIO}
SSTL-12 Class I, II	1.14	1.20	1.26	0.49 * V_{CCIO}	0.5 * V_{CCIO}	0.51 * V_{CCIO}	0.49 * V_{CCIO}	0.5 * VCCIO	0.51 * V_{CCIO}
HSTL-18 Class I, II	1.71	1.8	1.89	0.85	0.9	0.95	—	V_{CCIO}/2	—
HSTL-15 Class I, II	1.425	1.5	1.575	0.68	0.75	0.9	—	V_{CCIO}/2	—
HSTL-12 Class I, II	1.14	1.2	1.26	0.47 * V_{CCIO}	0.5 * V_{CCIO}	0.53 * V_{CCIO}	—	V_{CCIO}/2	—
HSUL-12	1.14	1.2	1.3	0.49 * V_{CCIO}	0.5 * V_{CCIO}	0.51 * V_{CCIO}	—	—	—

Table 19. Single-Ended SSTL, HSTL, and HSUL I/O Standards Signal Specifications for Stratix V Devices (Part 1 of 2)

I/O Standard	$V_{IL(DC)}$ (V)		$V_{IH(DC)}$ (V)		$V_{IL(AC)}$ (V)	$V_{IH(AC)}$ (V)	V_{OL} (V)	V_{OH} (V)	I_{ol} (mA)	I_{oh} (mA)
	Min	Max	Min	Max	Max	Min	Max	Min		
SSTL-2 Class I	–0.3	V_{REF} – 0.15	V_{REF} + 0.15	V_{CCIO} + 0.3	V_{REF} – 0.31	V_{REF} + 0.31	V_{TT} – 0.608	V_{TT} + 0.608	8.1	–8.1
SSTL-2 Class II	–0.3	V_{REF} – 0.15	V_{REF} + 0.15	V_{CCIO} + 0.3	V_{REF} – 0.31	V_{REF} + 0.31	V_{TT} – 0.81	V_{TT} + 0.81	16.2	–16.2
SSTL-18 Class I	–0.3	V_{REF} – 0.125	V_{REF} + 0.125	V_{CCIO} + 0.3	V_{REF} – 0.25	V_{REF} + 0.25	V_{TT} – 0.603	V_{TT} + 0.603	6.7	–6.7
SSTL-18 Class II	–0.3	V_{REF} – 0.125	V_{REF} + 0.125	V_{CCIO} + 0.3	V_{REF} – 0.25	V_{REF} + 0.25	0.28	V_{CCIO} – 0.28	13.4	–13.4
SSTL-15 Class I	—	V_{REF} – 0.1	V_{REF} + 0.1	—	V_{REF} – 0.175	V_{REF} + 0.175	0.2 * V_{CCIO}	0.8 * V_{CCIO}	8	–8
SSTL-15 Class II	—	V_{REF} – 0.1	V_{REF} + 0.1	—	V_{REF} – 0.175	V_{REF} + 0.175	0.2 * V_{CCIO}	0.8 * V_{CCIO}	16	–16
SSTL-135 Class I, II	—	V_{REF} – 0.09	V_{REF} + 0.09	—	V_{REF} – 0.16	V_{REF} + 0.16	0.2 * V_{CCIO}	0.8 * V_{CCIO}	—	—
SSTL-125 Class I, II	—	V_{REF} – 0.85	V_{REF} + 0.85	—	V_{REF} – 0.15	V_{REF} + 0.15	0.2 * V_{CCIO}	0.8 * V_{CCIO}	—	—
SSTL-12 Class I, II	—	V_{REF} – 0.1	V_{REF} + 0.1	—	V_{REF} – 0.15	V_{REF} + 0.15	0.2 * V_{CCIO}	0.8 * V_{CCIO}	—	—

Table 21. Differential HSTL and HSUL I/O Standards for Stratix V Devices (Part 2 of 2)

I/O Standard	V_{CCIO} (V)			$V_{DIF(DC)}$ (V)		$V_{X(AC)}$ (V)			$V_{CM(DC)}$ (V)			$V_{DIF(AC)}$ (V)	
	Min	Typ	Max	Min	Max	Min	Typ	Max	Min	Typ	Max	Min	Max
HSTL-12 Class I, II	1.14	1.2	1.26	0.16	V_{CCIO} + 0.3	—	0.5* V_{CCIO}	—	0.4* V_{CCIO}	0.5* V_{CCIO}	0.6* V_{CCIO}	0.3	V_{CCIO} + 0.48
HSUL-12	1.14	1.2	1.3	0.26	0.26	0.5*V_{CCIO} – 0.12	0.5* V_{CCIO}	0.5*V_{CCIO} + 0.12	0.4* V_{CCIO}	0.5* V_{CCIO}	0.6* V_{CCIO}	0.44	0.44

Table 22. Differential I/O Standard Specifications for Stratix V Devices (7)

I/O Standard	V_{CCIO} (V) (10)			V_{ID} (mV) (8)			$V_{ICM(DC)}$ (V)			V_{OD} (V) (6)			V_{OCM} (V) (6)		
	Min	Typ	Max	Min	Condition	Max	Min	Condition	Max	Min	Typ	Max	Min	Typ	Max
PCML	Transmitter, receiver, and input reference clock pins of the high-speed transceivers use the PCML I/O standard. For transmitter, receiver, and reference clock I/O pin specifications, refer to Table 23 on page 18.														
2.5 V LVDS (1)	2.375	2.5	2.625	100	V_{CM} = 1.25 V	—	0.05	$D_{MAX} \leq$ 700 Mbps	1.8	0.247	—	0.6	1.125	1.25	1.375
						—	1.05	$D_{MAX} >$ 700 Mbps	1.55	0.247	—	0.6	1.125	1.25	1.375
BLVDS (5)	2.375	2.5	2.625	100	—	—	—	—	—	—	—	—	—	—	—
RSDS (HIO) (2)	2.375	2.5	2.625	100	V_{CM} = 1.25 V	—	0.3	—	1.4	0.1	0.2	0.6	0.5	1.2	1.4
Mini-LVDS (HIO) (3)	2.375	2.5	2.625	200	—	600	0.4	—	1.325	0.25	—	0.6	1	1.2	1.4
LVPECL (4), (9)	—	—	—	300	—	—	0.6	$D_{MAX} \leq$ 700 Mbps	1.8	—	—	—	—	—	—
	—	—	—	300	—	—	1	$D_{MAX} >$ 700 Mbps	1.6	—	—	—	—	—	—

Notes toTable 22

(1) For optimized LVDS receiver performance, the receiver voltage input range must be between 1.0 V to 1.6 V for data rates above 700 Mbps, and 0 V to 1.85 V for data rates below 700 Mbps.

(2) For optimized RSDS receiver performance, the receiver voltage input range must be between 0.25 V to 1.45 V.

(3) For optimized Mini-LVDS receiver performance, the receiver voltage input range must be between 0.3 V to 1.425 V.

(4) For optimized LVPECL receiver performance, the receiver voltage input range must be between 0.85 V to 1.75 V for data rate above 700 Mbps and 0.45 V to 1.95 V for data rate below 700 Mbps.

(5) There are no fixed V_{ICM}, V_{OD}, and V_{OCM} specifications for BLVDS. They depend on the system topology.

(6) RL range: $90 \leq RL \leq 110\ \Omega$.

(7) The 1.4-V and 1.5-V PCML transceiver I/O standard specifications are described in “Transceiver Performance Specifications” on page 18.

(8) The minimum VID value is applicable over the entire common mode range, VCM.

(9) LVPECL is only supported on dedicated clock input pins.

(10) Differential inputs are powered by VCCPD which requires 2.5 V.

Power Consumption

Altera offers two ways to estimate power consumption for a design—the Excel-based Early Power Estimator and the Quartus® II PowerPlay Power Analyzer feature.

You typically use the interactive Excel-based Early Power Estimator before designing the FPGA to get a magnitude estimate of the device power. The Quartus II PowerPlay Power Analyzer provides better quality estimates based on the specifics of the design after you complete place-and-route. The PowerPlay Power Analyzer can apply a combination of user-entered, simulation-derived, and estimated signal activities that, when combined with detailed circuit models, yields very accurate power estimates.

For more information about power estimation tools, refer to the *PowerPlay Early Power Estimator User Guide* and the *PowerPlay Power Analysis* chapter in the *Quartus II Handbook*.

Table 23. Transceiver Specifications for Stratix V GX and GS Devices (1) (Part 2 of 7)

Symbol/ Description	Conditions	Transceiver Speed Grade 1			Transceiver Speed Grade 2			Transceiver Speed Grade 3			Unit
		Min	Typ	Max	Min	Typ	Max	Min	Typ	Max	
Spread-spectrum downspread	PCIe	—	0 to –0.5	—	—	0 to –0.5	—	—	0 to –0.5	—	%
On-chip termination resistors (21)	—	—	100	—	—	100	—	—	100	—	Ω
Absolute V_{MAX} (5)	Dedicated reference clock pin	—	—	1.6	—	—	1.6	—	—	1.6	V
	RX reference clock pin	—	—	1.2	—	—	1.2	—	—	1.2	
Absolute V_{MIN}	—	–0.4	—	—	–0.4	—	—	–0.4	—	—	V
Peak-to-peak differential input voltage	—	200	—	1600	200	—	1600	200	—	1600	mV
V_{ICM} (AC coupled) (3)	Dedicated reference clock pin	1050/1000/900/850 (2)			1050/1000/900/850 (2)			1050/1000/900/850 (2)			mV
	RX reference clock pin	1.0/0.9/0.85 (4)			1.0/0.9/0.85 (4)			1.0/0.9/0.85 (4)			V
V_{ICM} (DC coupled)	HCSL I/O standard for PCIe reference clock	250	—	550	250	—	550	250	—	550	mV
Transmitter REFCLK Phase Noise (622 MHz) (20)	100 Hz	—	—	-70	—	—	-70	—	—	-70	dBc/Hz
	1 kHz	—	—	-90	—	—	-90	—	—	-90	dBc/Hz
	10 kHz	—	—	-100	—	—	-100	—	—	-100	dBc/Hz
	100 kHz	—	—	-110	—	—	-110	—	—	-110	dBc/Hz
	≥1 MHz	—	—	-120	—	—	-120	—	—	-120	dBc/Hz
Transmitter REFCLK Phase Jitter (100 MHz) (17)	10 kHz to 1.5 MHz (PCIe)	—	—	3	—	—	3	—	—	3	ps (rms)
R_{REF} (19)	—	—	1800 ±1%	—	—	1800 ±1%	—	—	180 0 ±1%	—	Ω
Transceiver Clocks											
`fixedclk` clock frequency	PCIe Receiver Detect	—	100 or 125	—	—	100 or 125	—	—	100 or 125	—	MHz

Table 23. Transceiver Specifications for Stratix V GX and GS Devices (1) (Part 5 of 7)

Symbol/ Description	Conditions	Transceiver Speed Grade 1			Transceiver Speed Grade 2			Transceiver Speed Grade 3			Unit
		Min	Typ	Max	Min	Typ	Max	Min	Typ	Max	
Programmable DC gain	DC Gain Setting = 0	—	0	—	—	0	—	—	0	—	dB
	DC Gain Setting = 1	—	2	—	—	2	—	—	2	—	dB
	DC Gain Setting = 2	—	4	—	—	4	—	—	4	—	dB
	DC Gain Setting = 3	—	6	—	—	6	—	—	6	—	dB
	DC Gain Setting = 4	—	8	—	—	8	—	—	8	—	dB
Transmitter											
Supported I/O Standards	—	1.4-V and 1.5-V PCML									
Data rate (Standard PCS)	—	600	—	12200	600	—	12200	600	—	8500/ 10312.5 (24)	Mbps
Data rate (10G PCS)	—	600	—	14100	600	—	12500	600	—	8500/ 10312.5 (24)	Mbps
Differential on-chip termination resistors	85-Ω setting	—	85 ± 20%	—	—	85 ± 20%	—	—	85 ± 20%	—	Ω
	100-Ω setting	—	100 ± 20%	—	—	100 ± 20%	—	—	100 ± 20%	—	Ω
	120-Ω setting	—	120 ± 20%	—	—	120 ± 20%	—	—	120 ± 20%	—	Ω
	150-Ω setting	—	150 ± 20%	—	—	150 ± 20%	—	—	150 ± 20%	—	Ω
V_{OCM} (AC coupled)	0.65-V setting	—	650	—	—	650	—	—	650	—	mV
V_{OCM} (DC coupled)	—	—	650	—	—	650	—	—	650	—	mV
Rise time (7)	20% to 80%	30	—	160	30	—	160	30	—	160	ps
Fall time (7)	80% to 20%	30	—	160	30	—	160	30	—	160	ps
Intra-differential pair skew	Tx V_{CM} = 0.5 V and slew rate of 15 ps	—	—	15	—	—	15	—	—	15	ps
Intra-transceiver block transmitter channel-to-channel skew	x6 PMA bonded mode	—	—	120	—	—	120	—	—	120	ps

Table 23. Transceiver Specifications for Stratix V GX and GS Devices (1) (Part 6 of 7)

Symbol/ Description	Conditions	Transceiver Speed Grade 1			Transceiver Speed Grade 2			Transceiver Speed Grade 3			Unit
		Min	Typ	Max	Min	Typ	Max	Min	Typ	Max	
Inter-transceiver block transmitter channel-to-channel skew	xN PMA bonded mode	—	—	500	—	—	500	—	—	500	ps
CMU PLL											
Supported Data Range	—	600	—	12500	600	—	12500	600	—	8500/ 10312.5 (24)	Mbps
$t_{pll_powerdown}$ (15)	—	1	—	—	1	—	—	1	—	—	µs
t_{pll_lock} (16)	—	—	—	10	—	—	10	—	—	10	µs
ATX PLL											
Supported Data Rate Range	VCO post-divider L=2	8000	—	14100	8000	—	12500	8000	—	8500/ 10312.5 (24)	Mbps
	L=4	4000	—	7050	4000	—	6600	4000	—	6600	Mbps
	L=8	2000	—	3525	2000	—	3300	2000	—	3300	Mbps
	L=8, Local/Central Clock Divider =2	1000	—	1762.5	1000	—	1762.5	1000	—	1762.5	Mbps
$t_{pll_powerdown}$ (15)	—	1	—	—	1	—	—	1	—	—	µs
t_{pll_lock} (16)	—	—	—	10	—	—	10	—	—	10	µs
fPLL											
Supported Data Range	—	600	—	3250/ 3125 (25)	600	—	3250/ 3125 (25)	600	—	3250/ 3125 (25)	Mbps
$t_{pll_powerdown}$ (15)	—	1	—	—	1	—	—	1	—	—	µs

Table 23. Transceiver Specifications for Stratix V GX and GS Devices (1) (Part 7 of 7)

Symbol/ Description	Conditions	Transceiver Speed Grade 1			Transceiver Speed Grade 2			Transceiver Speed Grade 3			Unit
		Min	Typ	Max	Min	Typ	Max	Min	Typ	Max	
t_{pll_lock} (16)	—	—	—	10	—	—	10	—	—	10	µs

Notes toTable 23

(1) Speed grades shown in Table 23 refer to the PMA Speed Grade in the device ordering code. The maximum data rate could be restricted by the Core/PCS speed grade. Contact your Altera Sales Representative for the maximum data rate specifications in each speed grade combination offered. For more information about device ordering codes, refer to the *Stratix V Device Overview*.

(2) The reference clock common mode voltage is equal to the V_{CCR_GXB} power supply level.

(3) This supply must be connected to 1.0 V if the transceiver is configured at a data rate > 6.5 Gbps, and to 1.05 V if configured at a data rate > 10.3 Gbps when DFE is used. For data rates up to 6.5 Gbps, you can connect this supply to 0.85 V.

(4) This supply follows VCCR_GXB.

(5) The device cannot tolerate prolonged operation at this absolute maximum.

(6) The differential eye opening specification at the receiver input pins assumes that Receiver Equalization is disabled. If you enable Receiver Equalization, the receiver circuitry can tolerate a lower minimum eye opening, depending on the equalization level.

(7) The Quartus II software automatically selects the appropriate slew rate depending on the configured data rate or functional mode.

(8) The input reference clock frequency options depend on the data rate and the device speed grade.

(9) The line data rate may be limited by PCS-FPGA interface speed grade.

(10) Refer to Figure 1 for the GX channel AC gain curves. The total effective AC gain is the AC gain minus the DC gain.

(11) t_{LTR} is the time required for the receive CDR to lock to the input reference clock frequency after coming out of reset.

(12) t_{LTD} is time required for the receiver CDR to start recovering valid data after the rx_is_lockedtodata signal goes high.

(13) t_{LTD_manual} is the time required for the receiver CDR to start recovering valid data after the rx_is_lockedtodata signal goes high when the CDR is functioning in the manual mode.

(14) $t_{LTR_LTD_manual}$ is the time the receiver CDR must be kept in lock to reference (LTR) mode after the rx_is_lockedtoref signal goes high when the CDR is functioning in the manual mode.

(15) $t_{pll_powerdown}$ is the PLL powerdown minimum pulse width.

(16) t_{pll_lock} is the time required for the transmitter CMU/ATX PLL to lock to the input reference clock frequency after coming out of reset.

(17) To calculate the REFCLK rms phase jitter requirement for PCIe at reference clock frequencies other than 100 MHz, use the following formula: REFCLK rms phase jitter at f(MHz) = REFCLK rms phase jitter at 100 MHz × 100/f.

(18) The maximum peak to peak differential input voltage V_{ID} after device configuration is equal to 4 × (absolute V_{MAX} for receiver pin - V_{ICM}).

(19) For ES devices, R_{REF} is 2000 Ω ±1%.

(20) To calculate the REFCLK phase noise requirement at frequencies other than 622 MHz, use the following formula: REFCLK phase noise at f(MHz) = REFCLK phase noise at 622 MHz + 20*log(f/622).

(21) SFP/+ optical modules require the host interface to have RD+/- differentially terminated with 100 Ω. The internal OCT feature is available after the Stratix V FPGA configuration is completed. Altera recommends that FPGA configuration is completed before inserting the optical module. Otherwise, minimize unnecessary removal and insertion with unconfigured devices.

(22) Refer to Figure 2.

(23) For oversampling designs to support data rates less than the minimum specification, the CDR needs to be in LTR mode only.

(24) I3YY devices can achieve data rates up to 10.3125 Gbps.

(25) When you use fPLL as a TXPLL of the transceiver.

(26) `REFCLK` performance requires to meet transmitter `REFCLK` phase noise specification.

(27) Minimum eye opening of 85 mV is only for the unstressed input eye condition.

PLL Specifications

Table 31 lists the Stratix V PLL specifications when operating in both the commercial junction temperature range (0° to 85°C) and the industrial junction temperature range (–40° to 100°C).

Table 31. PLL Specifications for Stratix V Devices (Part 1 of 3)

Symbol	Parameter	Min	Typ	Max	Unit
f_{IN}	Input clock frequency (C1, C2, C2L, I2, and I2L speed grades)	5	—	800 (1)	MHz
	Input clock frequency (C3, I3, I3L, and I3YY speed grades)	5	—	800 (1)	MHz
	Input clock frequency (C4, I4 speed grades)	5	—	650 (1)	MHz
f_{INPFD}	Input frequency to the PFD	5	—	325	MHz
f_{FINPFD}	Fractional Input clock frequency to the PFD	50	—	160	MHz
f_{VCO} (9)	PLL VCO operating range (C1, C2, C2L, I2, I2L speed grades)	600	—	1600	MHz
	PLL VCO operating range (C3, I3, I3L, I3YY speed grades)	600	—	1600	MHz
	PLL VCO operating range (C4, I4 speed grades)	600	—	1300	MHz
$t_{EINDUTY}$	Input clock or external feedback clock input duty cycle	40	—	60	%
f_{OUT}	Output frequency for an internal global or regional clock (C1, C2, C2L, I2, I2L speed grades)	—	—	717 (2)	MHz
	Output frequency for an internal global or regional clock (C3, I3, I3L speed grades)	—	—	650 (2)	MHz
	Output frequency for an internal global or regional clock (C4, I4 speed grades)	—	—	580 (2)	MHz
f_{OUT_EXT}	Output frequency for an external clock output (C1, C2, C2L, I2, I2L speed grades)	—	—	800 (2)	MHz
	Output frequency for an external clock output (C3, I3, I3L speed grades)	—	—	667 (2)	MHz
	Output frequency for an external clock output (C4, I4 speed grades)	—	—	553 (2)	MHz
$t_{OUTDUTY}$	Duty cycle for a dedicated external clock output (when set to 50%)	45	50	55	%
t_{FCOMP}	External feedback clock compensation time	—	—	10	ns
$f_{DYCONFIGCLK}$	Dynamic Configuration Clock used for `mgmt_clk` and `scanclk`	—	—	100	MHz
t_{LOCK}	Time required to lock from the end-of-device configuration or deassertion of `areset`	—	—	1	ms
t_{DLOCK}	Time required to lock dynamically (after switchover or reconfiguring any non-post-scale counters/delays)	—	—	1	ms
f_{CLBW}	PLL closed-loop low bandwidth	—	0.3	—	MHz
	PLL closed-loop medium bandwidth	—	1.5	—	MHz
	PLL closed-loop high bandwidth (7)	—	4	—	MHz
t_{PLL_PSERR}	Accuracy of PLL phase shift	—	—	±50	ps
t_{ARESET}	Minimum pulse width on the `areset` signal	10	—	—	ns

Table 36. High-Speed I/O Specifications for Stratix V Devices (1), (2) (Part 2 of 4)

Symbol	Conditions	C1			C2, C2L, I2, I2L			C3, I3, I3L, I3YY			C4,I4			Unit
		Min	Typ	Max	Min	Typ	Max	Min	Typ	Max	Min	Typ	Max	
Transmitter														
True Differential I/O Standards - f_{HSDR} (data rate)	SERDES factor J = 3 to 10 (9), (11), (12), (13), (14), (15), (16)	(6)	—	1600	(6)	—	1434	(6)	—	1250	(6)	—	1050	Mbps
	SERDES factor J ≥ 4 LVDS TX with DPA (12), (14), (15), (16)	(6)	—	1600	(6)	—	1600	(6)	—	1600	(6)	—	1250	Mbps
	SERDES factor J = 2, uses DDR Registers	(6)	—	(7)	(6)	—	(7)	(6)	—	(7)	(6)	—	(7)	Mbps
	SERDES factor J = 1, uses SDR Register	(6)	—	(7)	(6)	—	(7)	(6)	—	(7)	(6)	—	(7)	Mbps
Emulated Differential I/O Standards with Three External Output Resistor Networks - f_{HSDR} (data rate) (10)	SERDES factor J = 4 to 10 (17)	(6)	—	1100	(6)	—	1100	(6)	—	840	(6)	—	840	Mbps
$t_{x\ Jitter}$ - True Differential I/O Standards	Total Jitter for Data Rate 600 Mbps - 1.25 Gbps	—	—	160	—	—	160	—	—	160	—	—	160	ps
	Total Jitter for Data Rate < 600 Mbps	—	—	0.1	—	—	0.1	—	—	0.1	—	—	0.1	UI
$t_{x\ Jitter}$ - Emulated Differential I/O Standards with Three External Output Resistor Network	Total Jitter for Data Rate 600 Mbps - 1.25 Gbps	—	—	300	—	—	300	—	—	300	—	—	325	ps
	Total Jitter for Data Rate < 600 Mbps	—	—	0.2	—	—	0.2	—	—	0.2	—	—	0.25	UI

Table 36. High-Speed I/O Specifications for Stratix V Devices (1), (2) (Part 4 of 4)

Symbol	Conditions	C1			C2, C2L, I2, I2L			C3, I3, I3L, I3YY			C4,I4			Unit
		Min	Typ	Max	Min	Typ	Max	Min	Typ	Max	Min	Typ	Max	
f_{HSDR} (data rate)	SERDES factor J = 3 to 10	(6)	—	(8)	(6)	—	(8)	(6)	—	(8)	(6)	—	(8)	Mbps
	SERDES factor J = 2, uses DDR Registers	(6)	—	(7)	(6)	—	(7)	(6)	—	(7)	(6)	—	(7)	Mbps
	SERDES factor J = 1, uses SDR Register	(6)	—	(7)	(6)	—	(7)	(6)	—	(7)	(6)	—	(7)	Mbps
DPA Mode														
DPA run length	—	—	—	10000	—	—	10000	—	—	10000	—	—	10000	UI
Soft CDR mode														
Soft-CDR PPM tolerance	—	—	—	300	—	—	300	—	—	300	—	—	300	± PPM
Non DPA Mode														
Sampling Window	—	—	—	300	—	—	300	—	—	300	—	—	300	ps

Notes to Table 36

(1) When J = 3 to 10, use the serializer/deserializer (SERDES) block.

(2) When J = 1 or 2, bypass the SERDES block.

(3) This only applies to DPA and soft-CDR modes.

(4) Clock Boost Factor (W) is the ratio between the input data rate to the input clock rate.

(5) This is achieved by using the LVDS clock network.

(6) The minimum specification depends on the clock source (for example, the PLL and clock pin) and the clock routing resource (global, regional, or local) that you use. The I/O differential buffer and input register do not have a minimum toggle rate.

(7) The maximum ideal frequency is the SERDES factor (J) x the PLL maximum output frequency (fOUT) provided you can close the design timing and the signal integrity simulation is clean.

(8) You can estimate the achievable maximum data rate for non-DPA mode by performing link timing closure analysis. You must consider the board skew margin, transmitter delay margin, and receiver sampling margin to determine the maximum data rate supported.

(9) If the receiver with DPA enabled and transmitter are using shared PLLs, the minimum data rate is 150 Mbps.

(10) You must calculate the leftover timing margin in the receiver by performing link timing closure analysis. You must consider the board skew margin, transmitter channel-to-channel skew, and receiver sampling margin to determine leftover timing margin.

(11) The F_{MAX} specification is based on the fast clock used for serial data. The interface F_{MAX} is also dependent on the parallel clock domain which is design-dependent and requires timing analysis.

(12) Stratix V RX LVDS will need DPA. For Stratix V TX LVDS, the receiver side component must have DPA.

(13) Stratix V LVDS serialization and de-serialization factor needs to be x4 and above.

(14) Requires package skew compensation with PCB trace length.

(15) Do not mix single-ended I/O buffer within LVDS I/O bank.

(16) Chip-to-chip communication only with a maximum load of 5 pF.

(17) When using True LVDS RX channels for emulated LVDS TX channel, only serialization factors 1 and 2 are supported.

Figure 7 shows the dynamic phase alignment (DPA) lock time specifications with the DPA PLL calibration option enabled.

Figure 7. DPA Lock Time Specification with DPA PLL Calibration Enabled

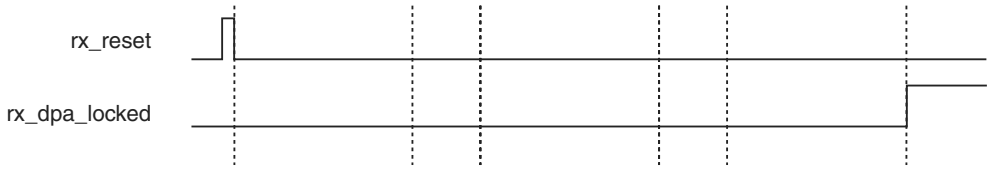

Table 37 lists the DPA lock time specifications for Stratix V devices.

Table 37. DPA Lock Time Specifications for Stratix V GX Devices Only *(1), (2), (3)*

Standard	Training Pattern	Number of Data Transitions in One Repetition of the Training Pattern	Number of Repetitions per 256 Data Transitions *(4)*	Maximum
SPI-4	00000000001111111111	2	128	640 data transitions
Parallel Rapid I/O	00001111	2	128	640 data transitions
	10010000	4	64	640 data transitions
Miscellaneous	10101010	8	32	640 data transitions
	01010101	8	32	640 data transitions

Notes toTable 37

(1) The DPA lock time is for one channel.

(2) One data transition is defined as a 0-to-1 or 1-to-0 transition.

(3) The DPA lock time stated in this table applies to both commercial and industrial grade.

(4) This is the number of repetitions for the stated training pattern to achieve the 256 data transitions.

Figure 8 shows the **LVDS** soft-clock data recovery (CDR)/DPA sinusoidal jitter tolerance specification for a data rate ≥ 1.25 Gbps. Table 38 lists the **LVDS** soft-CDR/DPA sinusoidal jitter tolerance specification for a data rate ≥ 1.25 Gbps.

Figure 8. LVDS Soft-CDR/DPA Sinusoidal Jitter Tolerance Specification for a Data Rate ≥ 1.25 Gbps

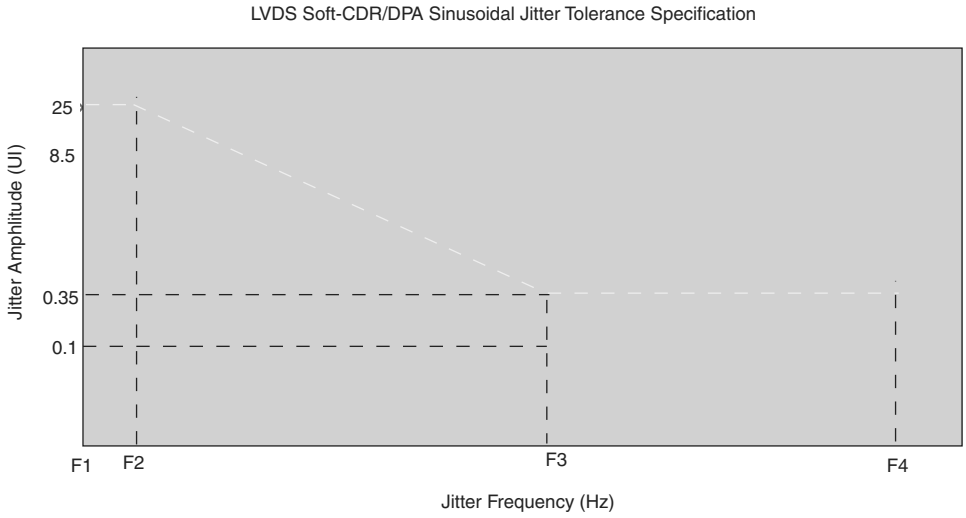

Table 42. Memory Output Clock Jitter Specification for Stratix V Devices (1), (Part 2 of 2) (2), (3)

Clock Network	Parameter	Symbol	C1		C2, C2L, I2, I2L		C3, I3, I3L, I3YY		C4,I4		Unit
			Min	Max	Min	Max	Min	Max	Min	Max	
PHY Clock	Clock period jitter	$t_{JIT(per)}$	–25	25	–25	25	–30	30	–35	35	ps
	Cycle-to-cycle period jitter	$t_{JIT(cc)}$	–50	50	–50	50	–60	60	–70	70	ps
	Duty cycle jitter	$t_{JIT(duty)}$	–37.5	37.5	–37.5	37.5	–45	45	–56	56	ps

Notes toTable 42

(1) The clock jitter specification applies to the memory output clock pins generated using differential signal-splitter and DDIO circuits clocked by a PLL output routed on a PHY, regional, or global clock network as specified. Altera recommends using PHY clock networks whenever possible.

(2) The clock jitter specification applies to the memory output clock pins clocked by an integer PLL.

(3) The memory output clock jitter is applicable when an input jitter of 30 ps peak-to-peak is applied with bit error rate (BER) -12, equivalent to 14 sigma.

OCT Calibration Block Specifications

Table 43 lists the OCT calibration block specifications for Stratix V devices.

Table 43. OCT Calibration Block Specifications for Stratix V Devices

Symbol	Description	Min	Typ	Max	Unit
OCTUSRCLK	Clock required by the OCT calibration blocks	—	—	20	MHz
T_{OCTCAL}	Number of OCTUSRCLK clock cycles required for OCT R_S/R_T calibration	—	1000	—	Cycles
$T_{OCTSHIFT}$	Number of OCTUSRCLK clock cycles required for the OCT code to shift out	—	32	—	Cycles
T_{RS_RT}	Time required between the `dyn_term_ctrl` and `oe` signal transitions in a bidirectional I/O buffer to dynamically switch between OCT R_S and R_T (Figure 10)	—	2.5	—	ns

Figure 10 shows the timing diagram for the `oe` and `dyn_term_ctrl` signals.

Figure 10. Timing Diagram for oe and dyn_term_ctrl Signals

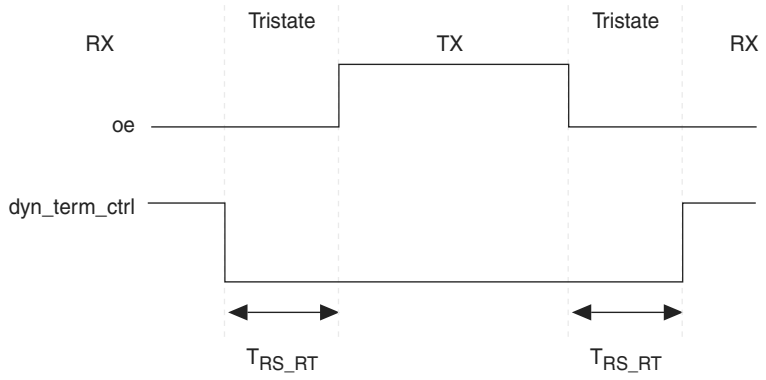

Duty Cycle Distortion (DCD) Specifications

Table 44 lists the worst-case DCD for Stratix V devices.

Table 44. Worst-Case DCD on Stratix V I/O Pins *(1)*

Symbol	C1		C2, C2L, I2, I2L		C3, I3, I3L, I3YY		C4,I4		Unit
	Min	Max	Min	Max	Min	Max	Min	Max	
Output Duty Cycle	45	55	45	55	45	55	45	55	%

Note toTable 44

(1) The DCD numbers do not cover the core clock network.

Configuration Specification

POR Delay Specification

Power-on reset (POR) delay is defined as the delay between the time when all the power supplies monitored by the POR circuitry reach the minimum recommended operating voltage to the time when the `nSTATUS` is released high and your device is ready to begin configuration.

For more information about the POR delay, refer to the *Hot Socketing and Power-On Reset in Stratix V Devices* chapter.

Table 45 lists the fast and standard POR delay specification.

Table 45. Fast and Standard POR Delay Specification *(1)*

POR Delay	Minimum	Maximum
Fast	4 ms	12 ms
Standard	100 ms	300 ms

Note toTable 45

(1) You can select the POR delay based on the `MSEL` settings as described in the MSEL Pin Settings section of the "Configuration, Design Security, and Remote System Upgrades in Stratix V Devices" chapter.

JTAG Configuration Specifications

Table 46 lists the JTAG timing parameters and values for Stratix V devices.

Table 46. JTAG Timing Parameters and Values for Stratix V Devices

Symbol	Description	Min	Max	Unit
t_{JCP}	TCK clock period *(2)*	30	—	ns
t_{JCP}	TCK clock period *(2)*	167	—	ns
t_{JCH}	TCK clock high time *(2)*	14	—	ns
t_{JCL}	TCK clock low time *(2)*	14	—	ns
$t_{JPSU\ (TDI)}$	TDI JTAG port setup time	2	—	ns
$t_{JPSU\ (TMS)}$	TMS JTAG port setup time	3	—	ns

Table 49. DCLK-to-DATA[] Ratio (1) (Part 2 of 2)

Configuration Scheme	Decompression	Design Security	DCLK-to-DATA[] Ratio
FPP ×32	Disabled	Disabled	1
	Disabled	Enabled	4
	Enabled	Disabled	8
	Enabled	Enabled	8

Note toTable 49

(1) Depending on the DCLK-to-DATA[] ratio, the host must send a DCLK frequency that is r times the data rate in bytes per second (Bps), or words per second (Wps). For example, in FPP ×16 when the DCLK-to-DATA[] ratio is 2, the DCLK frequency must be 2 times the data rate in Wps. Stratix V devices use the additional clock cycles to decrypt and decompress the configuration data.

If the DCLK-to-DATA[] ratio is greater than 1, at the end of configuration, you can only stop the DCLK (DCLK-to-DATA[] ratio – 1) clock cycles after the last data is latched into the Stratix V device.

Figure 11 shows the configuration interface connections between the Stratix V device and a MAX II or MAX V device for single device configuration.

Figure 11. Single Device FPP Configuration Using an External Host

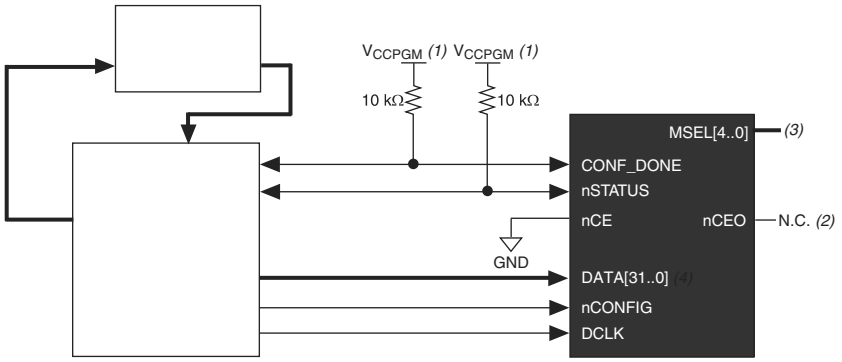

Notes toFigure 11

(1) Connect the resistor to a supply that provides an acceptable input signal for the Stratix V device. V_{CCPGM} must be high enough to meet the V_{IH} specification of the I/O on the device and the external host. Altera recommends powering up all configuration system I/Os with V_{CCPGM}.

(2) You can leave the nCEO pin unconnected or use it as a user I/O pin when it does not feed another device's nCE pin.

(3) The MSEL pin settings vary for different data width, configuration voltage standards, and POR delay. To connect MSEL, refer to the MSEL Pin Settings section of the "Configuration, Design Security, and Remote System Upgrades in Stratix V Devices" chapter.

(4) If you use FPP ×8, use DATA[7..0]. If you use FPP ×16, use DATA[15..0].

Table 50 lists the timing parameters for Stratix V devices for FPP configuration when the DCLK-to-DATA[] ratio is 1.

Table 50. FPP Timing Parameters for Stratix V Devices (1)

Symbol	Parameter	Minimum	Maximum	Units
t_{CF2CD}	nCONFIG low to CONF_DONE low	—	600	ns
t_{CF2ST0}	nCONFIG low to nSTATUS low	—	600	ns
t_{CFG}	nCONFIG low pulse width	2	—	µs
t_{STATUS}	nSTATUS low pulse width	268	1,506 (2)	µs
t_{CF2ST1}	nCONFIG high to nSTATUS high	—	1,506 (3)	µs
t_{CF2CK} (6)	nCONFIG high to first rising edge on DCLK	1,506	—	µs
t_{ST2CK} (6)	nSTATUS high to first rising edge of DCLK	2	—	µs
t_{DSU}	DATA[] setup time before rising edge on DCLK	5.5	—	ns
t_{DH}	DATA[] hold time after rising edge on DCLK	0	—	ns
t_{CH}	DCLK high time	$0.45 \times 1/f_{MAX}$	—	s
t_{CL}	DCLK low time	$0.45 \times 1/f_{MAX}$	—	s
t_{CLK}	DCLK period	$1/f_{MAX}$	—	s
f_{MAX}	DCLK frequency (FPP ×8/×16)	—	125	MHz
	DCLK frequency (FPP ×32)	—	100	MHz
t_{CD2UM}	CONF_DONE high to user mode (4)	175	437	µs
t_{CD2CU}	CONF_DONE high to CLKUSR enabled	4 × maximum DCLK period	—	—
t_{CD2UMC}	CONF_DONE high to user mode with CLKUSR option on	t_{CD2CU} + (8576 × CLKUSR period) (5)	—	—

Notes toTable 50

(1) Use these timing parameters when the decompression and design security features are disabled.

(2) This value is applicable if you do not delay configuration by extending the nCONFIG or nSTATUS low pulse width.

(3) This value is applicable if you do not delay configuration by externally holding the nSTATUS low.

(4) The minimum and maximum numbers apply only if you chose the internal oscillator as the clock source for initializing the device.

(5) To enable the CLKUSR pin as the initialization clock source and to obtain the maximum frequency specification on these pins, refer to the Initialization section of the "Configuration, Design Security, and Remote System Upgrades in Stratix V Devices" chapter.

(6) If nSTATUS is monitored, follow the t_{ST2CK} specification. If nSTATUS is not monitored, follow the t_{CF2CK} specification.

FPP Configuration Timing when DCLK-to-DATA [] > 1

Figure 13 shows the timing waveform for FPP configuration when using a MAX II device, MAX V device, or microprocessor as an external host. This waveform shows timing when the DCLK-to-DATA[] ratio is more than 1.

Table 54 lists the PS configuration timing parameters for Stratix V devices.

Table 54. PS Timing Parameters for Stratix V Devices

Symbol	Parameter	Minimum	Maximum	Units
t_{CF2CD}	nCONFIG low to CONF_DONE low	—	600	ns
t_{CF2ST0}	nCONFIG low to nSTATUS low	—	600	ns
t_{CFG}	nCONFIG low pulse width	2	—	µs
t_{STATUS}	nSTATUS low pulse width	268	1,506 (1)	µs
t_{CF2ST1}	nCONFIG high to nSTATUS high	—	1,506 (2)	µs
t_{CF2CK} (5)	nCONFIG high to first rising edge on DCLK	1,506	—	µs
t_{ST2CK} (5)	nSTATUS high to first rising edge of DCLK	2	—	µs
t_{DSU}	DATA[] setup time before rising edge on DCLK	5.5	—	ns
t_{DH}	DATA[] hold time after rising edge on DCLK	0	—	ns
t_{CH}	DCLK high time	$0.45 \times 1/f_{MAX}$	—	s
t_{CL}	DCLK low time	$0.45 \times 1/f_{MAX}$	—	s
t_{CLK}	DCLK period	$1/f_{MAX}$	—	s
f_{MAX}	DCLK frequency	—	125	MHz
t_{CD2UM}	CONF_DONE high to user mode (3)	175	437	µs
t_{CD2CU}	CONF_DONE high to CLKUSR enabled	4 × maximum DCLK period	—	—
t_{CD2UMC}	CONF_DONE high to user mode with CLKUSR option on	t_{CD2CU} + (8576 × CLKUSR period) (4)	—	—

Notes to Table 54

(1) This value is applicable if you do not delay configuration by extending the nCONFIG or nSTATUS low pulse width.

(2) This value is applicable if you do not delay configuration by externally holding the nSTATUS low.

(3) The minimum and maximum numbers apply only if you choose the internal oscillator as the clock source for initializing the device.

(4) To enable the CLKUSR pin as the initialization clock source and to obtain the maximum frequency specification on these pins, refer to the "Initialization" section.

(5) If nSTATUS is monitored, follow the t_{ST2CK} specification. If nSTATUS is not monitored, follow the t_{CF2CK} specification.

Initialization

Table 55 lists the initialization clock source option, the applicable configuration schemes, and the maximum frequency.

Table 55. Initialization Clock Source Option and the Maximum Frequency

Initialization Clock Source	Configuration Schemes	Maximum Frequency	Minimum Number of Clock Cycles (1)
Internal Oscillator	AS, PS, FPP	12.5 MHz	8576
CLKUSR	AS, PS, FPP (2)	125 MHz	
DCLK	PS, FPP	125 MHz	

Notes to Table 55

(1) The minimum number of clock cycles required for device initialization.

(2) To enable CLKUSR as the initialization clock source, turn on the Enable user-supplied start-up clock (CLKUSR) option in the Quartus II software from the General panel of the Device and Pin Options dialog box.

Table 61. Document Revision History (Part 2 of 3)

Date	Version	Changes
November 2014	3.3	■ Added the I3YY speed grade and changed the data rates for the GX channel in Table 1. ■ Added the I3YY speed grade to the V_{CC} description in Table 6. ■ Added the I3YY speed grade to V_{CCHIP_L}, V_{CCHIP_R}, V_{CCHSSI_L}, and V_{CCHSSI_R} descriptions in Table 7. ■ Added 240-Ω to Table 11. ■ Changed CDR PPM tolerance in Table 23. ■ Added additional max data rate for fPLL in Table 23. ■ Added the I3YY speed grade and changed the data rates for transceiver speed grade 3 in Table 25. ■ Added the I3YY speed grade and changed the data rates for transceiver speed grade 3 in Table 26. ■ Changed CDR PPM tolerance in Table 28. ■ Added additional max data rate for fPLL in Table 28. ■ Changed the mode descriptions for MLAB and M20K in Table 33. ■ Changed the Max value of f_{HSCLK_OUT} for the C2, C2L, I2, I2L speed grades in Table 36. ■ Changed the frequency ranges for C1 and C2 in Table 39. ■ Changed the .rbf file sizes for 5SGSD6 and 5SGSD8 in Table 47. ■ Added note about `nSTATUS` to Table 50, Table 51, Table 54. ■ Changed the available settings in Table 58. ■ Changed the note in “Periphery Performance”. ■ Updated the “I/O Standard Specifications” section. ■ Updated the “Raw Binary File Size” section. ■ Updated the receiver voltage input range in Table 22. ■ Updated the max frequency for the LVDS clock network in Table 36. ■ Updated the `DCLK` note to Figure 11. ■ Updated Table 23 VO_{CM} (DC Coupled) condition. ■ Updated Table 6 and Table 7. ■ Added the `DCLK` specification to Table 55. ■ Updated the notes for Table 47. ■ Updated the list of parameters for Table 56.
November 2013	3.2	■ Updated Table 28
November 2013	3.1	■ Updated Table 33
November 2013	3.0	■ Updated Table 23 and Table 28
October 2013	2.9	■ Updated the “Transceiver Characterization” section
October 2013	2.8	■ Updated Table 3, Table 12, Table 14, Table 19, Table 20, Table 23, Table 24, Table 28, Table 30, Table 31, Table 32, Table 33, Table 36, Table 39, Table 40, Table 41, Table 42, Table 47, Table 53, Table 58, and Table 59 ■ Added Figure 1 and Figure 3 ■ Added the “Transceiver Characterization” section ■ Removed all “Preliminary” designations.