Intel - 5SGXEA7H3F35C2LN Datasheet

Welcome to E-XFL.COM

Understanding Embedded - FPGAs (Field Programmable Gate Array)

Embedded - FPGAs, or Field Programmable Gate Arrays, are advanced integrated circuits that offer unparalleled flexibility and performance for digital systems. Unlike traditional fixed-function logic devices, FPGAs can be programmed and reprogrammed to execute a wide array of logical operations, enabling customized functionality tailored to specific applications. This reprogrammability allows developers to iterate designs quickly and implement complex functions without the need for custom hardware.

Applications of Embedded - FPGAs

The versatility of Embedded - FPGAs makes them indispensable in numerous fields. In telecommunications.

Details	
Product Status	Obsolete
Number of LABs/CLBs	234720
Number of Logic Elements/Cells	622000
Total RAM Bits	51200000
Number of I/O	552
Number of Gates	-
Voltage - Supply	0.82V ~ 0.88V
Mounting Type	Surface Mount
Operating Temperature	0°C ~ 85°C (TJ)
Package / Case	1152-BBGA, FCBGA
Supplier Device Package	1152-FBGA (35x35)
Purchase URL	https://www.e-xfl.com/product-detail/intel/5sgxea7h3f35c2ln

Table 1. Stratix V GX and GS Commercial and Industrial Speed Grade Offering (1), (2), (3) (Part 2 of 2)

Transceiver Speed Grade	Core Speed Grade							
	C1	C2, C2L	C3	C4	I2, I2L	I3, I3L	I3YY	I4
3 GX channel—8.5 Gbps	—	Yes	Yes	Yes	—	Yes	Yes (4)	Yes

Notes to Table 1:

(1) C = Commercial temperature grade; I = Industrial temperature grade.

(2) Lower number refers to faster speed grade.

(3) C2L, I2L, and I3L speed grades are for low-power devices.

(4) I3YY speed grades can achieve up to 10.3125 Gbps.

Table 2 lists the industrial and commercial speed grades for the Stratix V GT devices.

Table 2. Stratix V GT Commercial and Industrial Speed Grade Offering (1), (2)

Transceiver Speed Grade	Core Speed Grade			
	C1	C2	I2	I3
2 GX channel—12.5 Gbps GT channel—28.05 Gbps	Yes	Yes	—	—
3 GX channel—12.5 Gbps GT channel—25.78 Gbps	Yes	Yes	Yes	Yes

Notes to Table 2:

(1) C = Commercial temperature grade; I = Industrial temperature grade.

(2) Lower number refers to faster speed grade.

Absolute Maximum Ratings

Absolute maximum ratings define the maximum operating conditions for Stratix V devices. The values are based on experiments conducted with the devices and theoretical modeling of breakdown and damage mechanisms. The functional operation of the device is not implied for these conditions.

CAUTION

Conditions other than those listed in Table 3 may cause permanent damage to the device. Additionally, device operation at the absolute maximum ratings for extended periods of time may have adverse effects on the device.

Table 3. Absolute Maximum Ratings for Stratix V Devices (Part 1 of 2)

Symbol	Description	Minimum	Maximum	Unit
V_{CC}	Power supply for core voltage and periphery circuitry	–0.5	1.35	V
V_{CCPT}	Power supply for programmable power technology	–0.5	1.8	V
V_{CCPGM}	Power supply for configuration pins	–0.5	3.9	V
V_{CC_AUX}	Auxiliary supply for the programmable power technology	–0.5	3.4	V
V_{CCBAT}	Battery back-up power supply for design security volatile key register	–0.5	3.9	V
V_{CCPD}	I/O pre-driver power supply	–0.5	3.9	V
V_{CCIO}	I/O power supply	–0.5	3.9	V

Table 18. Single-Ended SSTL, HSTL, and HSUL I/O Reference Voltage Specifications for Stratix V Devices

I/O Standard	V_{CCIO} (V)			V_{REF} (V)			V_{TT} (V)		
	Min	Typ	Max	Min	Typ	Max	Min	Typ	Max
SSTL-2 Class I, II	2.375	2.5	2.625	0.49 * V_{CCIO}	0.5 * V_{CCIO}	0.51 * V_{CCIO}	V_{REF} – 0.04	V_{REF}	V_{REF} + 0.04
SSTL-18 Class I, II	1.71	1.8	1.89	0.833	0.9	0.969	V_{REF} – 0.04	V_{REF}	V_{REF} + 0.04
SSTL-15 Class I, II	1.425	1.5	1.575	0.49 * V_{CCIO}	0.5 * V_{CCIO}	0.51 * V_{CCIO}	0.49 * V_{CCIO}	0.5 * VCCIO	0.51 * V_{CCIO}
SSTL-135 Class I, II	1.283	1.35	1.418	0.49 * V_{CCIO}	0.5 * V_{CCIO}	0.51 * V_{CCIO}	0.49 * V_{CCIO}	0.5 * V_{CCIO}	0.51 * V_{CCIO}
SSTL-125 Class I, II	1.19	1.25	1.26	0.49 * V_{CCIO}	0.5 * V_{CCIO}	0.51 * V_{CCIO}	0.49 * V_{CCIO}	0.5 * VCCIO	0.51 * V_{CCIO}
SSTL-12 Class I, II	1.14	1.20	1.26	0.49 * V_{CCIO}	0.5 * V_{CCIO}	0.51 * V_{CCIO}	0.49 * V_{CCIO}	0.5 * VCCIO	0.51 * V_{CCIO}
HSTL-18 Class I, II	1.71	1.8	1.89	0.85	0.9	0.95	—	V_{CCIO}/2	—
HSTL-15 Class I, II	1.425	1.5	1.575	0.68	0.75	0.9	—	V_{CCIO}/2	—
HSTL-12 Class I, II	1.14	1.2	1.26	0.47 * V_{CCIO}	0.5 * V_{CCIO}	0.53 * V_{CCIO}	—	V_{CCIO}/2	—
HSUL-12	1.14	1.2	1.3	0.49 * V_{CCIO}	0.5 * V_{CCIO}	0.51 * V_{CCIO}	—	—	—

Table 19. Single-Ended SSTL, HSTL, and HSUL I/O Standards Signal Specifications for Stratix V Devices (Part 1 of 2)

I/O Standard	$V_{IL(DC)}$ (V)		$V_{IH(DC)}$ (V)		$V_{IL(AC)}$ (V)	$V_{IH(AC)}$ (V)	V_{OL} (V)	V_{OH} (V)	I_{ol} (mA)	I_{oh} (mA)
	Min	Max	Min	Max	Max	Min	Max	Min		
SSTL-2 Class I	–0.3	V_{REF} – 0.15	V_{REF} + 0.15	V_{CCIO} + 0.3	V_{REF} – 0.31	V_{REF} + 0.31	V_{TT} – 0.608	V_{TT} + 0.608	8.1	–8.1
SSTL-2 Class II	–0.3	V_{REF} – 0.15	V_{REF} + 0.15	V_{CCIO} + 0.3	V_{REF} – 0.31	V_{REF} + 0.31	V_{TT} – 0.81	V_{TT} + 0.81	16.2	–16.2
SSTL-18 Class I	–0.3	V_{REF} – 0.125	V_{REF} + 0.125	V_{CCIO} + 0.3	V_{REF} – 0.25	V_{REF} + 0.25	V_{TT} – 0.603	V_{TT} + 0.603	6.7	–6.7
SSTL-18 Class II	–0.3	V_{REF} – 0.125	V_{REF} + 0.125	V_{CCIO} + 0.3	V_{REF} – 0.25	V_{REF} + 0.25	0.28	V_{CCIO} – 0.28	13.4	–13.4
SSTL-15 Class I	—	V_{REF} – 0.1	V_{REF} + 0.1	—	V_{REF} – 0.175	V_{REF} + 0.175	0.2 * V_{CCIO}	0.8 * V_{CCIO}	8	–8
SSTL-15 Class II	—	V_{REF} – 0.1	V_{REF} + 0.1	—	V_{REF} – 0.175	V_{REF} + 0.175	0.2 * V_{CCIO}	0.8 * V_{CCIO}	16	–16
SSTL-135 Class I, II	—	V_{REF} – 0.09	V_{REF} + 0.09	—	V_{REF} – 0.16	V_{REF} + 0.16	0.2 * V_{CCIO}	0.8 * V_{CCIO}	—	—
SSTL-125 Class I, II	—	V_{REF} – 0.85	V_{REF} + 0.85	—	V_{REF} – 0.15	V_{REF} + 0.15	0.2 * V_{CCIO}	0.8 * V_{CCIO}	—	—
SSTL-12 Class I, II	—	V_{REF} – 0.1	V_{REF} + 0.1	—	V_{REF} – 0.15	V_{REF} + 0.15	0.2 * V_{CCIO}	0.8 * V_{CCIO}	—	—

Table 23. Transceiver Specifications for Stratix V GX and GS Devices (1) (Part 3 of 7)

Symbol/ Description	Conditions	Transceiver Speed Grade 1			Transceiver Speed Grade 2			Transceiver Speed Grade 3			Unit
		Min	Typ	Max	Min	Typ	Max	Min	Typ	Max	
Reconfiguration clock (`mgmt_clk_clk`) frequency	—	100	—	125	100	—	125	100	—	125	MHz
Receiver											
Supported I/O Standards	—	1.4-V PCML, 1.5-V PCML, 2.5-V PCML, LVPECL, and LVDS									
Data rate (Standard PCS) (9), (23)	—	600	—	12200	600	—	12200	600	—	8500/ 10312.5 (24)	Mbps
Data rate (10G PCS) (9), (23)	—	600	—	14100	600	—	12500	600	—	8500/ 10312.5 (24)	Mbps
Absolute V_{MAX} for a receiver pin (5)	—	—	—	1.2	—	—	1.2	—	—	1.2	V
Absolute V_{MIN} for a receiver pin	—	–0.4	—	—	–0.4	—	—	–0.4	—	—	V
Maximum peak-to-peak differential input voltage V_{ID} (diff p-p) before device configuration (22)	—	—	—	1.6	—	—	1.6	—	—	1.6	V
Maximum peak-to-peak differential input voltage V_{ID} (diff p-p) after device configuration (18), (22)	V_{CCR_GXB} = 1.0 V/1.05 V (V_{ICM} = 0.70 V)	—	—	2.0	—	—	2.0	—	—	2.0	V
	V_{CCR_GXB} = 0.90 V (V_{ICM} = 0.6 V)	—	—	2.4	—	—	2.4	—	—	2.4	V
	V_{CCR_GXB} = 0.85 V (V_{ICM} = 0.6 V)	—	—	2.4	—	—	2.4	—	—	2.4	V
Minimum differential eye opening at receiver serial input pins (6), (22), (27)	—	85	—	—	85	—	—	85	—	—	mV

Table 23. Transceiver Specifications for Stratix V GX and GS Devices (1) (Part 4 of 7)

Symbol/ Description	Conditions	Transceiver Speed Grade 1			Transceiver Speed Grade 2			Transceiver Speed Grade 3			Unit
		Min	Typ	Max	Min	Typ	Max	Min	Typ	Max	
Differential on-chip termination resistors (21)	85–Ω setting	—	85 ± 30%	—	—	85 ± 30%	—	—	85 ± 30%	—	Ω
	100–Ω setting	—	100 ± 30%	—	—	100 ± 30%	—	—	100 ± 30%	—	Ω
	120–Ω setting	—	120 ± 30%	—	—	120 ± 30%	—	—	120 ± 30%	—	Ω
	150-Ω setting	—	150 ± 30%	—	—	150 ± 30%	—	—	150 ± 30%	—	Ω
V_{ICM} (AC and DC coupled)	V_{CCR_GXB} = 0.85 V or 0.9 V full bandwidth	—	600	—	—	600	—	—	600	—	mV
	V_{CCR_GXB} = 0.85 V or 0.9 V half bandwidth	—	600	—	—	600	—	—	600	—	mV
	V_{CCR_GXB} = 1.0 V/1.05 V full bandwidth	—	700	—	—	700	—	—	700	—	mV
	V_{CCR_GXB} = 1.0 V half bandwidth	—	750	—	—	750	—	—	750	—	mV
t_{LTR} (11)	—	—	—	10	—	—	10	—	—	10	µs
t_{LTD} (12)	—	4	—	—	4	—	—	4	—	—	µs
t_{LTD_manual} (13)	—	4	—	—	4	—	—	4	—	—	µs
$t_{LTR_LTD_manual}$ (14)	—	15	—	—	15	—	—	15	—	—	µs
Run Length	—	—	—	200	—	—	200	—	—	200	UI
Programmable equalization (AC Gain) (10)	Full bandwidth (6.25 GHz) Half bandwidth (3.125 GHz)	—	—	16	—	—	16	—	—	16	dB

Table 25 shows the approximate maximum data rate using the standard PCS.

Table 25. Stratix V Standard PCS Approximate Maximum Date Rate *(1), (3)*

Mode *(2)*	Transceiver Speed Grade	PMA Width	20	20	16	16	10	10	8	8
		PCS/Core Width	40	20	32	16	20	10	16	8
FIFO	1	C1, C2, C2L, I2, I2L core speed grade	12.2	11.4	9.76	9.12	6.5	5.8	5.2	4.72
	2	C1, C2, C2L, I2, I2L core speed grade	12.2	11.4	9.76	9.12	6.5	5.8	5.2	4.72
		C3, I3, I3L core speed grade	9.8	9.0	7.84	7.2	5.3	4.7	4.24	3.76
	3	C1, C2, C2L, I2, I2L core speed grade	8.5	8.5	8.5	8.5	6.5	5.8	5.2	4.72
		I3YY core speed grade	10.3125	10.3125	7.84	7.2	5.3	4.7	4.24	3.76
		C3, I3, I3L core speed grade	8.5	8.5	7.84	7.2	5.3	4.7	4.24	3.76
		C4, I4 core speed grade	8.5	8.2	7.04	6.56	4.8	4.2	3.84	3.44
Register	1	C1, C2, C2L, I2, I2L core speed grade	12.2	11.4	9.76	9.12	6.1	5.7	4.88	4.56
	2	C1, C2, C2L, I2, I2L core speed grade	12.2	11.4	9.76	9.12	6.1	5.7	4.88	4.56
		C3, I3, I3L core speed grade	9.8	9.0	7.92	7.2	4.9	4.5	3.96	3.6
	3	C1, C2, C2L, I2, I2L core speed grade	10.3125	10.3125	10.3125	10.3125	6.1	5.7	4.88	4.56
		I3YY core speed grade	10.3125	10.3125	7.92	7.2	4.9	4.5	3.96	3.6
		C3, I3, I3L core speed grade	8.5	8.5	7.92	7.2	4.9	4.5	3.96	3.6
		C4, I4 core speed grade	8.5	8.2	7.04	6.56	4.4	4.1	3.52	3.28

Notes to Table 25:

(1) The maximum data rate is in Gbps.

(2) The Phase Compensation FIFO can be configured in FIFO mode or register mode. In the FIFO mode, the pointers are not fixed, and the latency can vary. In the register mode the pointers are fixed for low latency.

(3) The maximum data rate is also constrained by the transceiver speed grade. Refer to Table 1 for the transceiver speed grade.

Table 27 shows the V_{OD} settings for the GX channel.

Table 27. Typical V_{OD} Setting for GX Channel, TX Termination = 100 Ω (2)

Symbol	V_{OD} Setting	V_{OD} Value (mV)	V_{OD} Setting	V_{OD} Value (mV)
V_{OD} differential peak to peak typical (3)	0 (1)	0	32	640
	1 (1)	20	33	660
	2 (1)	40	34	680
	3 (1)	60	35	700
	4 (1)	80	36	720
	5 (1)	100	37	740
	6	120	38	760
	7	140	39	780
	8	160	40	800
	9	180	41	820
	10	200	42	840
	11	220	43	860
	12	240	44	880
	13	260	45	900
	14	280	46	920
	15	300	47	940
	16	320	48	960
	17	340	49	980
	18	360	50	1000
	19	380	51	1020
	20	400	52	1040
	21	420	53	1060
	22	440	54	1080
	23	460	55	1100
	24	480	56	1120
	25	500	57	1140
	26	520	58	1160
	27	540	59	1180
	28	560	60	1200
	29	580	61	1220
	30	600	62	1240
	31	620	63	1260

Note to Table 27:

(1) If TX termination resistance = 100Ω, this VOD setting is illegal.

(2) The tolerance is +/-20% for all VOD settings except for settings 2 and below.

(3) Refer to Figure 2.

Figure 2 shows the differential transmitter output waveform.

Figure 2. Differential Transmitter Output Waveform

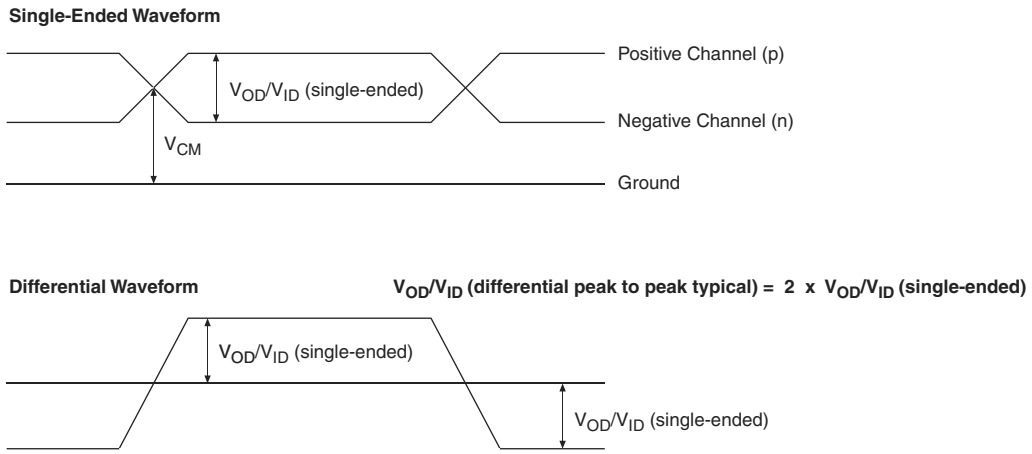

Figure 3 shows the Stratix V AC gain curves for GX channels.

Figure 3. AC Gain Curves for GX Channels (full bandwidth)

Stratix V GT devices contain both GX and GT channels. All transceiver specifications for the GX channels not listed in Table 28 are the same as those listed in Table 23.

Table 28 lists the Stratix V GT transceiver specifications.

Table 28. Transceiver Specifications for Stratix V GT Devices (Part 1 of 5) *(1)*

Symbol/ Description	Conditions	Transceiver Speed Grade 2			Transceiver Speed Grade 3			Unit
		Min	Typ	Max	Min	Typ	Max	
Reference Clock								
Supported I/O Standards	Dedicated reference clock pin	1.2-V PCML, 1.4-V PCML, 1.5-V PCML, 2.5-V PCML, Differential LVPECL, LVDS, and HCSL						
	RX reference clock pin	1.4-V PCML, 1.5-V PCML, 2.5-V PCML, LVPECL, and LVDS						
Input Reference Clock Frequency (CMU PLL) *(6)*	—	40	—	710	40	—	710	MHz
Input Reference Clock Frequency (ATX PLL) *(6)*	—	100	—	710	100	—	710	MHz
Rise time	20% to 80%	—	—	400	—	—	400	ps
Fall time	80% to 20%	—	—	400	—	—	400	
Duty cycle	—	45	—	55	45	—	55	%
Spread-spectrum modulating clock frequency	PCI Express (PCIe)	30	—	33	30	—	33	kHz
Spread-spectrum downspread	PCIe	—	0 to –0.5	—	—	0 to –0.5	—	%
On-chip termination resistors *(19)*	—	—	100	—	—	100	—	Ω
Absolute V_{MAX} *(3)*	Dedicated reference clock pin	—	—	1.6	—	—	1.6	V
	RX reference clock pin	—	—	1.2	—	—	1.2	
Absolute V_{MIN}	—	-0.4	—	—	-0.4	—	—	V
Peak-to-peak differential input voltage	—	200	—	1600	200	—	1600	mV
V_{ICM} (AC coupled)	Dedicated reference clock pin	1050/1000 *(2)*			1050/1000 *(2)*			mV
	RX reference clock pin	1.0/0.9/0.85 *(22)*			1.0/0.9/0.85 *(22)*			V
V_{ICM} (DC coupled)	HCSL I/O standard for PCIe reference clock	250	—	550	250	—	550	mV

Table 29 shows the V_{OD} settings for the GT channel.

Table 29. Typical V_{OD} Setting for GT Channel, TX Termination = 100 Ω

Symbol	V_{OD} Setting	V_{OD} Value (mV)
V_{OD} differential peak to peak typical *(1)*	0	0
	1	200
	2	400
	3	600
	4	800
	5	1000

Note:

(1) Refer to Figure 4.

- XFI
- ASI
- HiGig/HiGig+
- HiGig2/HiGig2+
- Serial Data Converter (SDC)
- GPON
- SDI
- SONET
- Fibre Channel (FC)
- PCIe
- QPI
- SFF-8431

Download the Stratix V Characterization Report Tool to view the characterization report summary for these protocols.

Core Performance Specifications

This section describes the clock tree, phase-locked loop (PLL), digital signal processing (DSP), memory blocks, configuration, and JTAG specifications.

Clock Tree Specifications

Table 30 lists the clock tree specifications for Stratix V devices.

Table 30. Clock Tree Performance for Stratix V Devices *(1)*

Symbol	Performance			Unit
	C1, C2, C2L, I2, and I2L	C3, I3, I3L, and I3YY	C4, I4	
Global and Regional Clock	717	650	580	MHz
Periphery Clock	550	500	500	MHz

Note to Table 30:

(1) The Stratix V ES devices are limited to 600 MHz core clock tree performance.

Table 31. PLL Specifications for Stratix V Devices (Part 3 of 3)

Symbol	Parameter	Min	Typ	Max	Unit
f_{RES}	Resolution of VCO frequency (f_{INPFD} = 100 MHz)	390625	5.96	0.023	Hz

Notes to Table 31:

(1) This specification is limited in the Quartus II software by the I/O maximum frequency. The maximum I/O frequency is different for each I/O standard.

(2) This specification is limited by the lower of the two: I/O f_{MAX} or f_{OUT} of the PLL.

(3) A high input jitter directly affects the PLL output jitter. To have low PLL output clock jitter, you must provide a clean clock source < 120 ps.

(4) f_{REF} is fIN/N when N = 1.

(5) Peak-to-peak jitter with a probability level of 10^{-12} (14 sigma, 99.99999999974404% confidence level). The output jitter specification applies to the intrinsic jitter of the PLL, when an input jitter of 30 ps is applied. The external memory interface clock output jitter specifications use a different measurement method and are available in Table 44 on page 52.

(6) The cascaded PLL specification is only applicable with the following condition:
a. Upstream PLL: 0.59Mhz ≤ Upstream PLL BW < 1 MHz
b. Downstream PLL: Downstream PLL BW > 2 MHz

(7) High bandwidth PLL settings are not supported in external feedback mode.

(8) The external memory interface clock output jitter specifications use a different measurement method, which is available in Table 42 on page 50.

(9) The VCO frequency reported by the Quartus II software in the PLL Usage Summary section of the compilation report takes into consideration the VCO post-scale counter K value. Therefore, if the counter K has a value of 2, the frequency reported can be lower than the f_{VCO} specification.

(10) This specification only covers fractional PLL for low bandwidth. The f_{VCO} for fractional value range 0.05 - 0.95 must be ≥ 1000 MHz, while f_{VCO} for fractional value range 0.20 - 0.80 must be ≥ 1200 MHz.

(11) This specification only covered fractional PLL for low bandwidth. The f_{VCO} for fractional value range 0.05-0.95 must be ≥ 1000 MHz.

(12) This specification only covered fractional PLL for low bandwidth. The f_{VCO} for fractional value range 0.20-0.80 must be ≥ 1200 MHz.

DSP Block Specifications

Table 32 lists the Stratix V DSP block performance specifications.

Table 32. Block Performance Specifications for Stratix V DSP Devices (Part 1 of 2)

Mode	Peformance							Unit
	C1	C2, C2L	I2, I2L	C3	I3, I3L, I3YY	C4	I4	
Modes using one DSP								
Three 9 x 9	600	600	600	480	480	420	420	MHz
One 18 x 18	600	600	600	480	480	420	400	MHz
Two partial 18 x 18 (or 16 x 16)	600	600	600	480	480	420	400	MHz
One 27 x 27	500	500	500	400	400	350	350	MHz
One 36 x 18	500	500	500	400	400	350	350	MHz
One sum of two 18 x 18(One sum of 2 16 x 16)	500	500	500	400	400	350	350	MHz
One sum of square	500	500	500	400	400	350	350	MHz
One 18 x 18 plus 36 (a x b) + c	500	500	500	400	400	350	350	MHz
Modes using two DSPs								
Three 18 x 18	500	500	500	400	400	350	350	MHz
One sum of four 18 x 18	475	475	475	380	380	300	300	MHz
One sum of two 27 x 27	465	465	450	380	380	300	290	MHz
One sum of two 36 x 18	475	475	475	380	380	300	300	MHz
One complex 18 x 18	500	500	500	400	400	350	350	MHz
One 36 x 36	475	475	475	380	380	300	300	MHz

Periphery Performance

This section describes periphery performance, including high-speed I/O and external memory interface.

I/O performance supports several system interfaces, such as the **LVDS** high-speed I/O interface, external memory interface, and the **PCI/PCI-X** bus interface. General-purpose I/O standards such as 3.3-, 2.5-, 1.8-, and 1.5-**LVTTL/LVCMOS** are capable of a typical 167 MHz and 1.2-**LVCMOS** at 100 MHz interfacing frequency with a 10 pF load.

☞ The actual achievable frequency depends on design- and system-specific factors. Ensure proper timing closure in your design and perform HSPICE/IBIS simulations based on your specific design and system setup to determine the maximum achievable frequency in your system.

High-Speed I/O Specification

Table 36 lists high-speed I/O timing for Stratix V devices.

Table 36. High-Speed I/O Specifications for Stratix V Devices (1), (2) (Part 1 of 4)

Symbol	Conditions	C1			C2, C2L, I2, I2L			C3, I3, I3L, I3YY			C4,I4			Unit
		Min	Typ	Max	Min	Typ	Max	Min	Typ	Max	Min	Typ	Max	
f_{HSCLK_in} (input clock frequency) True Differential I/O Standards	Clock boost factor W = 1 to 40 (4)	5	—	800	5	—	800	5	—	625	5	—	525	MHz
f_{HSCLK_in} (input clock frequency) Single Ended I/O Standards (3)	Clock boost factor W = 1 to 40 (4)	5	—	800	5	—	800	5	—	625	5	—	525	MHz
f_{HSCLK_in} (input clock frequency) Single Ended I/O Standards	Clock boost factor W = 1 to 40 (4)	5	—	520	5	—	520	5	—	420	5	—	420	MHz
f_{HSCLK_OUT} (output clock frequency)	—	5	—	800	5	—	800	5	—	625 (5)	5	—	525 (5)	MHz

Table 36. High-Speed I/O Specifications for Stratix V Devices (1), (2) (Part 3 of 4)

Symbol	Conditions	C1			C2, C2L, I2, I2L			C3, I3, I3L, I3YY			C4,I4			Unit
		Min	Typ	Max	Min	Typ	Max	Min	Typ	Max	Min	Typ	Max	
t_{DUTY}	Transmitter output clock duty cycle for both True and Emulated Differential I/O Standards	45	50	55	45	50	55	45	50	55	45	50	55	%
t_{RISE} & t_{FALL}	True Differential I/O Standards	—	—	160	—	—	160	—	—	200	—	—	200	ps
	Emulated Differential I/O Standards with three external output resistor networks	—	—	250	—	—	250	—	—	250	—	—	300	ps
TCCS	True Differential I/O Standards	—	—	150	—	—	150	—	—	150	—	—	150	ps
	Emulated Differential I/O Standards	—	—	300	—	—	300	—	—	300	—	—	300	ps
Receiver														
True Differential I/O Standards - $f_{HSDRDPA}$ (data rate)	SERDES factor J = 3 to 10 (11), (12), (13), (14), (15), (16)	150	—	1434	150	—	1434	150	—	1250	150	—	1050	Mbps
	SERDES factor J ≥ 4 LVDS RX with DPA (12), (14), (15), (16)	150	—	1600	150	—	1600	150	—	1600	150	—	1250	Mbps
	SERDES factor J = 2, uses DDR Registers	(6)	—	(7)	(6)	—	(7)	(6)	—	(7)	(6)	—	(7)	Mbps
	SERDES factor J = 1, uses SDR Register	(6)	—	(7)	(6)	—	(7)	(6)	—	(7)	(6)	—	(7)	Mbps

Figure 7 shows the dynamic phase alignment (DPA) lock time specifications with the DPA PLL calibration option enabled.

Figure 7. DPA Lock Time Specification with DPA PLL Calibration Enabled

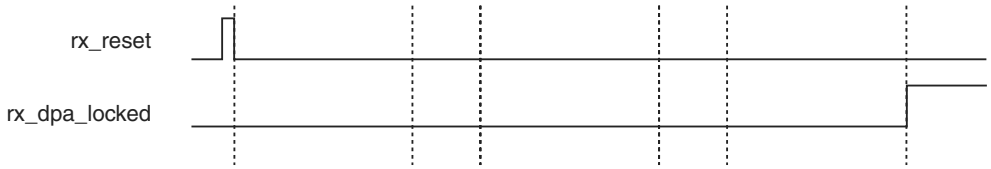

Table 37 lists the DPA lock time specifications for Stratix V devices.

Table 37. DPA Lock Time Specifications for Stratix V GX Devices Only *(1), (2), (3)*

Standard	Training Pattern	Number of Data Transitions in One Repetition of the Training Pattern	Number of Repetitions per 256 Data Transitions *(4)*	Maximum
SPI-4	00000000001111111111	2	128	640 data transitions
Parallel Rapid I/O	00001111	2	128	640 data transitions
	10010000	4	64	640 data transitions
Miscellaneous	10101010	8	32	640 data transitions
	01010101	8	32	640 data transitions

Notes to Table 37:

(1) The DPA lock time is for one channel.

(2) One data transition is defined as a 0-to-1 or 1-to-0 transition.

(3) The DPA lock time stated in this table applies to both commercial and industrial grade.

(4) This is the number of repetitions for the stated training pattern to achieve the 256 data transitions.

Figure 8 shows the **LVDS** soft-clock data recovery (CDR)/DPA sinusoidal jitter tolerance specification for a data rate ≥ 1.25 Gbps. Table 38 lists the **LVDS** soft-CDR/DPA sinusoidal jitter tolerance specification for a data rate ≥ 1.25 Gbps.

Figure 8. LVDS Soft-CDR/DPA Sinusoidal Jitter Tolerance Specification for a Data Rate ≥ 1.25 Gbps

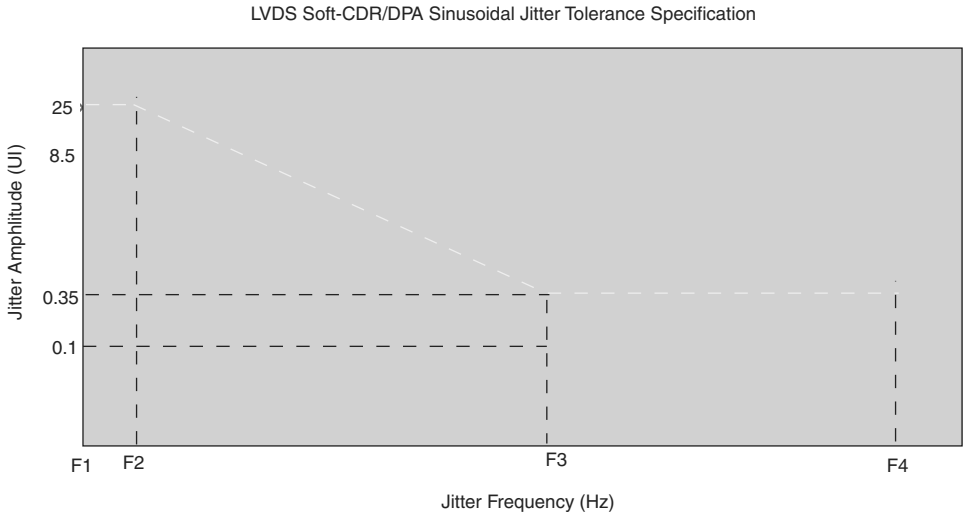

FPP Configuration Timing when DCLK-to-DATA [] = 1

Figure 12 shows the timing waveform for FPP configuration when using a MAX II or MAX V device as an external host. This waveform shows timing when the DCLK-to-DATA[] ratio is 1.

Figure 12. FPP Configuration Timing Waveform When the DCLK-to-DATA[] Ratio is 1 *(1), (2)*

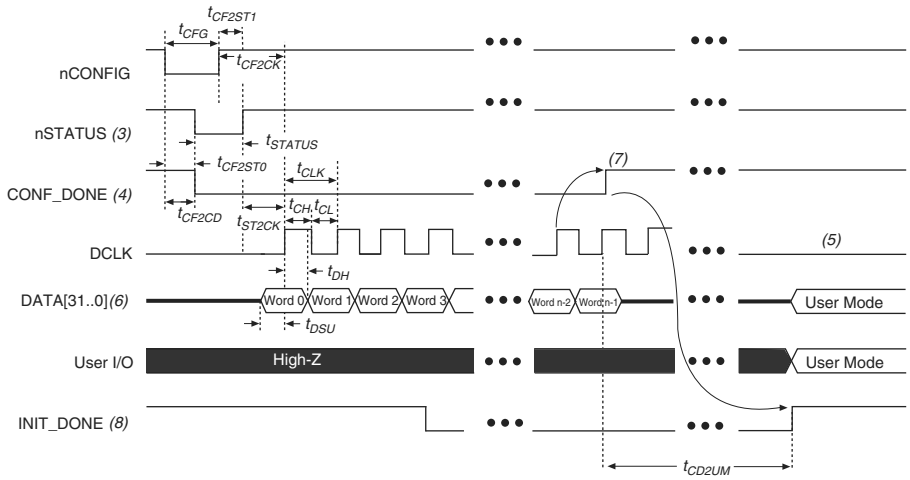

Notes to Figure 12:

(1) Use this timing waveform when the DCLK-to-DATA[] ratio is 1.

(2) The beginning of this waveform shows the device in user mode. In user mode, nCONFIG, nSTATUS, and CONF_DONE are at logic-high levels. When nCONFIG is pulled low, a reconfiguration cycle begins.

(3) After power-up, the Stratix V device holds nSTATUS low for the time of the POR delay.

(4) After power-up, before and during configuration, CONF_DONE is low.

(5) Do not leave DCLK floating after configuration. DCLK is ignored after configuration is complete. It can toggle high or low if required.

(6) For FPP ×16, use DATA[15..0]. For FPP ×8, use DATA[7..0]. DATA[31..0] are available as a user I/O pin after configuration. The state of this pin depends on the dual-purpose pin settings.

(7) To ensure a successful configuration, send the entire configuration data to the Stratix V device. CONF_DONE is released high when the Stratix V device receives all the configuration data successfully. After CONF_DONE goes high, send two additional falling edges on DCLK to begin initialization and enter user mode.

(8) After the option bit to enable the INIT_DONE pin is configured into the device, the INIT_DONE goes low.

Active Serial Configuration Timing

Table 52 lists the DCLK frequency specification in the AS configuration scheme.

Table 52. DCLK Frequency Specification in the AS Configuration Scheme (1), (2)

Minimum	Typical	Maximum	Unit
5.3	7.9	12.5	MHz
10.6	15.7	25.0	MHz
21.3	31.4	50.0	MHz
42.6	62.9	100.0	MHz

Notes to Table 52:

(1) This applies to the DCLK frequency specification when using the internal oscillator as the configuration clock source.

(2) The AS multi-device configuration scheme does not support DCLK frequency of 100 MHz.

Figure 14 shows the single-device configuration setup for an AS ×1 mode.

Figure 14. AS Configuration Timing

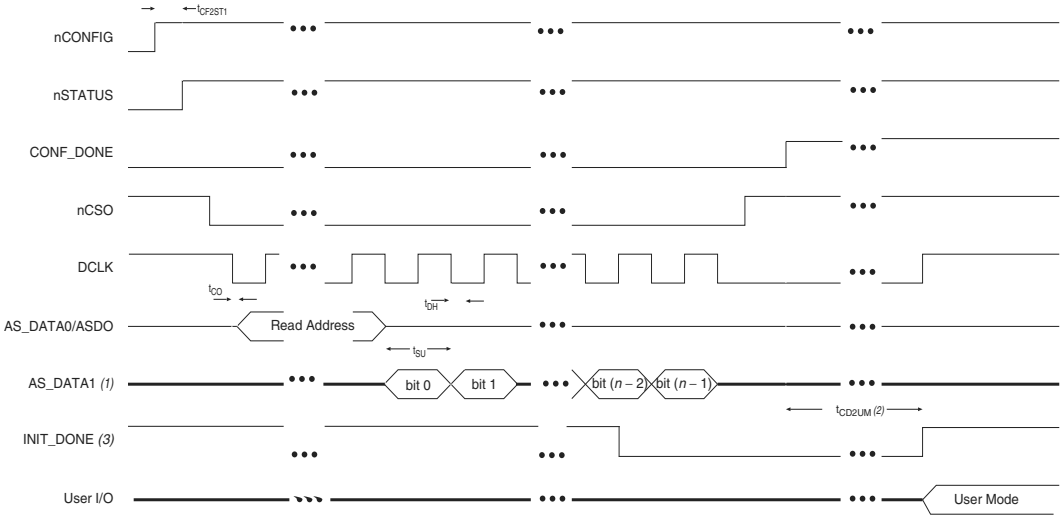

Notes to Figure 14:

(1) If you are using AS ×4 mode, this signal represents the AS_DATA[3..0] and EPCQ sends in 4-bits of data for each DCLK cycle.

(2) The initialization clock can be from internal oscillator or CLKUSR pin.

(3) After the option bit to enable the INIT_DONE pin is configured into the device, the INIT_DONE goes low.

Table 53 lists the timing parameters for AS ×1 and AS ×4 configurations in Stratix V devices.

Table 53. AS Timing Parameters for AS ×1 and AS ×4 Configurations in Stratix V Devices (1), (2) (Part 1 of 2)

Symbol	Parameter	Minimum	Maximum	Units
t_{CO}	DCLK falling edge to AS_DATA0/ASDO output	—	2	ns
t_{SU}	Data setup time before falling edge on DCLK	1.5	—	ns
t_H	Data hold time after falling edge on DCLK	0	—	ns

Document Revision History

Table 61 lists the revision history for this chapter.

Table 61. Document Revision History (Part 1 of 3)

Date	Version	Changes
June 2018	3.9	■ Added the “Stratix V Device Overshoot Duration” figure.
April 2017	3.8	■ Added a footnote to the “High-Speed I/O Specifications for Stratix V Devices” table. ■ Changed the minimum value for t_{CD2UMC} in the “PS Timing Parameters for Stratix V Devices” table. ■ Changed the condition for 100-Ω R_D in the “OCT Without Calibration Resistance Tolerance Specifications for Stratix V Devices” table. ■ Changed the minimum value for t_{CD2UMC} in the “AS Timing Parameters for AS ´1 and AS ´4 Configurations in Stratix V Devices” table ■ Changed the minimum value for t_{CD2UMC} in the “FPP Timing Parameters for Stratix V Devices When the DCLK-to-DATA[] Ratio is >1” table. ■ Changed the minimum value for t_{CD2UMC} in the “FPP Timing Parameters for Stratix V Devices When the DCLK-to-DATA[] Ratio is >1” table. ■ Changed the minimum number of clock cycles value in the “Initialization Clock Source Option and the Maximum Frequency” table.
June 2016	3.7	■ Added the V_{ID} minimum specification for LVPECL in the “Differential I/O Standard Specifications for Stratix V Devices” table ■ Added the I_{OUT} specification to the “Absolute Maximum Ratings for Stratix V Devices” table.
December 2015	3.6	■ Added a footnote to the “High-Speed I/O Specifications for Stratix V Devices” table.
December 2015	3.5	■ Changed the transmitter, receiver, and ATX PLL data rate specifications in the “Transceiver Specifications for Stratix V GX and GS Devices” table. ■ Changed the configuration .rbf sizes in the “Uncompressed .rbf Sizes for Stratix V Devices” table.

July 2015	3.4	■ Changed the data rate specification for transceiver speed grade 3 in the following tables:
		  ■ “Transceiver Specifications for Stratix V GX and GS Devices”
		  ■ “Stratix V Standard PCS Approximate Maximum Date Rate”
		  ■ “Stratix V 10G PCS Approximate Maximum Data Rate”
		■ Changed the conditions for reference clock rise and fall time, and added a note to the “Transceiver Specifications for Stratix V GX and GS Devices” table.
		■ Added a note to the “Minimum differential eye opening at receiver serial input pins” specification in the “Transceiver Specifications for Stratix V GX and GS Devices” table.
		■ Changed the t_{CO} maximum value in the “AS Timing Parameters for AS ´1 and AS ´4 Configurations in Stratix V Devices” table.
		■ Removed the CDR ppm tolerance specification from the “Transceiver Specifications for Stratix V GX and GS Devices” table.

Table 61. Document Revision History (Part 3 of 3)

Date	Version	Changes
May 2013	2.7	■ Updated Table 2, Table 6, Table 7, Table 20, Table 23, Table 27, Table 47, Table 60 ■ Added Table 24, Table 48 ■ Updated Figure 9, Figure 10, Figure 11, Figure 12
February 2013	2.6	■ Updated Table 7, Table 9, Table 20, Table 23, Table 27, Table 30, Table 31, Table 35, Table 46 ■ Updated “Maximum Allowed Overshoot and Undershoot Voltage”
December 2012	2.5	■ Updated Table 3, Table 6, Table 7, Table 8, Table 23, Table 24, Table 25, Table 27, Table 30, Table 32, Table 35 ■ Added Table 33 ■ Added “Fast Passive Parallel Configuration Timing” ■ Added “Active Serial Configuration Timing” ■ Added “Passive Serial Configuration Timing” ■ Added “Remote System Upgrades” ■ Added “User Watchdog Internal Circuitry Timing Specification” ■ Added “Initialization” ■ Added “Raw Binary File Size”
June 2012	2.4	■ Added Figure 1, Figure 2, and Figure 3. ■ Updated Table 1, Table 2, Table 3, Table 6, Table 11, Table 22, Table 23, Table 27,Table 29, Table 30, Table 31, Table 32, Table 35, Table 38, Table 39, Table 40, Table 41, Table 43, Table 56, and Table 59. ■ Various edits throughout to fix bugs. ■ Changed title of document to *Stratix V Device Datasheet*. ■ Removed document from the Stratix V handbook and made it a separate document.
February 2012	2.3	■ Updated Table 1–22, Table 1–29, Table 1–31, and Table 1–31.
December 2011	2.2	■ Added Table 2–31. ■ Updated Table 2–28 and Table 2–34.
November 2011	2.1	■ Added Table 2–2 and Table 2–21 and updated Table 2–5 with information about Stratix V GT devices. ■ Updated Table 2–11, Table 2–13, Table 2–20, and Table 2–25. ■ Various edits throughout to fix SPRs.
May 2011	2.0	■ Updated Table 2–4, Table 2–18, Table 2–19, Table 2–21, Table 2–22, Table 2–23, and Table 2–24. ■ Updated the “DQ Logic Block and Memory Output Clock Jitter Specifications” title. ■ Chapter moved to Volume 1. ■ Minor text edits.
December 2010	1.1	■ Updated Table 1–2, Table 1–4, Table 1–19, and Table 1–23. ■ Converted chapter to the new template. ■ Minor text edits.
July 2010	1.0	Initial release.