STMicroelectronics - STM32F401VBH3 Datasheet

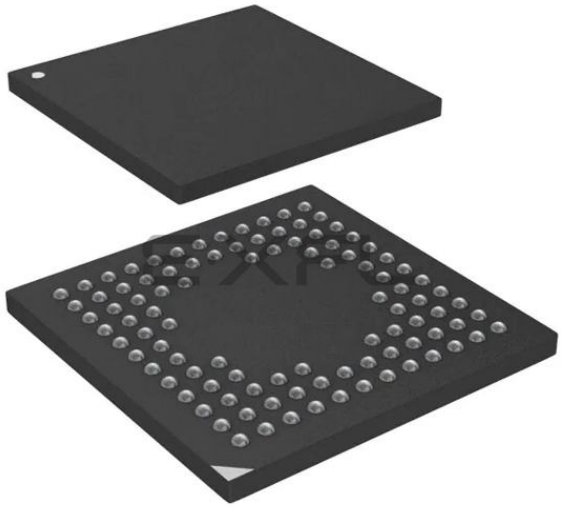

Welcome to E-XFL.COM

What is "Embedded - Microcontrollers"?

"Embedded - Microcontrollers" refer to small, integrated circuits designed to perform specific tasks within larger systems. These microcontrollers are essentially compact computers on a single chip, containing a processor core, memory, and programmable input/output peripherals. They are called "embedded" because they are embedded within electronic devices to control various functions, rather than serving as standalone computers. Microcontrollers are crucial in modern electronics, providing the intelligence and control needed for a wide range of applications.

Applications of "Embedded - Microcontrollers"

Details	
Product Status	Active
Core Processor	ARM® Cortex®-M4
Core Size	32-Bit Single-Core
Speed	84MHz
Connectivity	I²C, IrDA, LINbus, SDIO, SPI, UART/USART, USB OTG
Peripherals	Brown-out Detect/Reset, DMA, I²S, POR, PWM, WDT
Number of I/O	50
Program Memory Size	128KB (128K x 8)
Program Memory Type	FLASH
EEPROM Size	-
RAM Size	64K x 8
Voltage - Supply (Vcc/Vdd)	1.7V ~ 3.6V
Data Converters	A/D 16x12b
Oscillator Type	Internal
Operating Temperature	-40°C ~ 125°C (TA)
Mounting Type	Surface Mount
Package / Case	100-UFBGA
Supplier Device Package	100-UFBGA (7x7)
Purchase URL	https://www.e-xfl.com/product-detail/stmicroelectronics/stm32f401vbh3

6.3.6 Supply current characteristics 63
6.3.7 Wakeup time from low-power modes 73
6.3.8 External clock source characteristics 74
6.3.9 Internal clock source characteristics 78
6.3.10 PLL characteristics 80
6.3.11 PLL spread spectrum clock generation (SSCG) characteristics 82
6.3.12 Memory characteristics 83
6.3.13 EMC characteristics 85
6.3.14 Absolute maximum ratings (electrical sensitivity) 87
6.3.15 I/O current injection characteristics 88
6.3.16 I/O port characteristics 89
6.3.17 NRST pin characteristics 94
6.3.18 TIM timer characteristics 95
6.3.19 Communications interfaces 96
6.3.20 12-bit ADC characteristics 104
6.3.21 Temperature sensor characteristics 110
6.3.22 V_{BAT} monitoring characteristics 111
6.3.23 Embedded reference voltage 111
6.3.24 SD/SDIO MMC card host interface (SDIO) characteristics 111
6.3.25 RTC characteristics 113

7 Package information 114
7.1 WLCSP49 2.965x2.965 mm package information 114
7.2 UFQFPN48 package information 117
7.3 LQFP64 package information 120
7.4 LQFP100 package information 123
7.5 UFBGA100 package information 126
7.6 Thermal characteristics 129
7.6.1 Reference document 129

8 Part numbering 130

9 Revision history 131

Table 42. PLLI2S (audio PLL) characteristics . . . 81
Table 43. SSCG parameters constraint . . . 82
Table 44. Flash memory characteristics . . . 83
Table 45. Flash memory programming . . . 84
Table 46. Flash memory programming with V_{PP} voltage . . . 84
Table 47. Flash memory endurance and data retention . . . 85
Table 48. EMS characteristics for LQFP100 package . . . 86
Table 49. EMI characteristics for WLCSP49 . . . 87
Table 50. EMI characteristics for LQFP100 . . . 87
Table 51. ESD absolute maximum ratings . . . 88
Table 52. Electrical sensitivities . . . 88
Table 53. I/O current injection susceptibility . . . 89
Table 54. I/O static characteristics . . . 89
Table 55. Output voltage characteristics . . . 92
Table 56. I/O AC characteristics . . . 92
Table 57. NRST pin characteristics . . . 94
Table 58. TIMx characteristics . . . 95
Table 59. I^2C characteristics . . . 96
Table 60. SCL frequency (f_{PCLK1}= 42 MHz, V_{DD} = V_{DD_I2C} = 3.3 V) . . . 97
Table 61. SPI dynamic characteristics . . . 98
Table 62. I^2S dynamic characteristics . . . 101
Table 63. USB OTG FS startup time . . . 103
Table 64. USB OTG FS DC electrical characteristics . . . 103
Table 65. USB OTG FS electrical characteristics . . . 104
Table 66. ADC characteristics . . . 104
Table 67. ADC accuracy at f_{ADC} = 18 MHz . . . 106
Table 68. ADC accuracy at f_{ADC} = 30 MHz . . . 106
Table 69. ADC accuracy at f_{ADC} = 36 MHz . . . 106
Table 70. ADC dynamic accuracy at f_{ADC} = 18 MHz - limited test conditions . . . 107
Table 71. ADC dynamic accuracy at f_{ADC} = 36 MHz - limited test conditions . . . 107
Table 72. Temperature sensor characteristics . . . 110
Table 73. Temperature sensor calibration values . . . 110
Table 74. V_{BAT} monitoring characteristics . . . 111
Table 75. Embedded internal reference voltage . . . 111
Table 76. Internal reference voltage calibration values . . . 111
Table 77. Dynamic characteristics: SD / MMC characteristics . . . 112
Table 78. RTC characteristics . . . 113
Table 79. WLCSP49 - 49-ball, 2.965 x 2.965 mm, 0.4 mm pitch wafer level chip scale package mechanical data . . . 115
Table 80. WLCSP49 recommended PCB design rules (0.4 mm pitch) . . . 116
Table 81. UFQFPN48 - 48-lead, 7 x 7 mm, 0.5 mm pitch, ultra thin fine pitch quad flat package mechanical data . . . 117
Table 82. LQFP64 - 64-pin, 10 x 10 mm, 64-pin low-profile quad flat package mechanical data. . . 121
Table 83. LQPF100- 100-pin, 14 x 14 mm, 100-pin low-profile quad flat package mechanical data 124
Table 84. UFBGA100 - 100-ball, 7 x 7 mm, 0.50 mm pitch, ultra fine pitch ball grid array package mechanical data . . . 126
Table 85. UFBGA100 recommended PCB design rules (0.5 mm pitch BGA) . . . 127
Table 86. Package thermal characteristics . . . 129
Table 87. Ordering information scheme . . . 130
Table 88. Document revision history . . . 131

List of figures

Figure 1. Compatible board design for LQFP100 package . . . 12
Figure 2. Compatible board design for LQFP64 package . . . 13
Figure 3. STM32F401xB/STM32F401xC block diagram . . . 14
Figure 4. Multi-AHB matrix . . . 16
Figure 5. Power supply supervisor interconnection with internal reset OFF . . . 19
Figure 6. PDR_ON control with internal reset OFF . . . 20
Figure 7. Regulator OFF . . . 22
Figure 8. Startup in regulator OFF: slow V_{DD} slope - power-down reset risen after V_{CAP_1}/V_{CAP_2} stabilization . . . 23
Figure 9. Startup in regulator OFF mode: fast V_{DD} slope - power-down reset risen before V_{CAP_1}/V_{CAP_2} stabilization . . . 23
Figure 10. STM32F401xB/STM32F401xC WLCSP49 pinout . . . 32
Figure 11. STM32F401xB/STM32F401xC UFQFPN48 pinout . . . 33
Figure 12. STM32F401xB/STM32F401xC LQFP64 pinout . . . 34
Figure 13. STM32F401xB/STM32F401xC LQFP100 pinout . . . 35
Figure 14. STM32F401xB/STM32F401xC UFBGA100 pinout . . . 36
Figure 15. Memory map . . . 50
Figure 16. Pin loading conditions . . . 54
Figure 17. Input voltage measurement . . . 55
Figure 18. Power supply scheme . . . 56
Figure 19. Current consumption measurement scheme . . . 57
Figure 20. External capacitor C_{EXT} . . . 61
Figure 21. Typical V_{BAT} current consumption (LSE and RTC ON) . . . 69
Figure 22. High-speed external clock source AC timing diagram . . . 75
Figure 23. Low-speed external clock source AC timing diagram . . . 76
Figure 24. Typical application with an 8 MHz crystal . . . 77
Figure 25. Typical application with a 32.768 kHz crystal . . . 78
Figure 26. ACC_{HSI} versus temperature . . . 79
Figure 27. ACC_{LSI} versus temperature . . . 80
Figure 28. PLL output clock waveforms in center spread mode . . . 83
Figure 29. PLL output clock waveforms in down spread mode . . . 83
Figure 30. FT I/O input characteristics . . . 91
Figure 31. I/O AC characteristics definition . . . 94
Figure 32. Recommended NRST pin protection . . . 95
Figure 33. I^2C bus AC waveforms and measurement circuit . . . 97
Figure 34. SPI timing diagram - slave mode and CPHA = 0 . . . 99
Figure 35. SPI timing diagram - slave mode and CPHA = 1(1) . . . 99
Figure 36. SPI timing diagram - master mode(1) . . . 100
Figure 37. I^2S slave timing diagram (Philips protocol)(1) . . . 102
Figure 38. I^2S master timing diagram (Philips protocol)(1) . . . 102
Figure 39. USB OTG FS timings: definition of data signal rise and fall time . . . 104
Figure 40. ADC accuracy characteristics . . . 108
Figure 41. Typical connection diagram using the ADC . . . 108
Figure 42. Power supply and reference decoupling (V_{REF+} not connected to V_{DDA}) . . . 109
Figure 43. Power supply and reference decoupling (V_{REF+} connected to V_{DDA}) . . . 110
Figure 44. SDIO high-speed mode . . . 112
Figure 45. SD default mode . . . 112
Figure 46. WLCSP49 - 0.4 mm pitch wafer level chip scale package outline . . . 114

1 Introduction

This datasheet provides the description of the STM32F401xB/STM32F401xC line of microcontrollers.

The STM32F401xB/STM32F401xC datasheet should be read in conjunction with RM0368 reference manual which is available from the STMicroelectronics website *www.st.com*. It includes all information concerning Flash memory programming.

For information on the Cortex®-M4 core, please refer to the Cortex®-M4 programming manual (PM0214) available from *www.st.com*.

2.1 Compatibility with STM32F4 series

The STM32F401xB/STM32F401xC are fully software and feature compatible with the STM32F4 series (STM32F42x, STM32F43x, STM32F41x, STM32F405 and STM32F407)

The STM32F401xB/STM32F401xC can be used as drop-in replacement of the other STM32F4 products but some slight changes have to be done on the PCB board.

Figure 1. Compatible board design for LQFP100 package

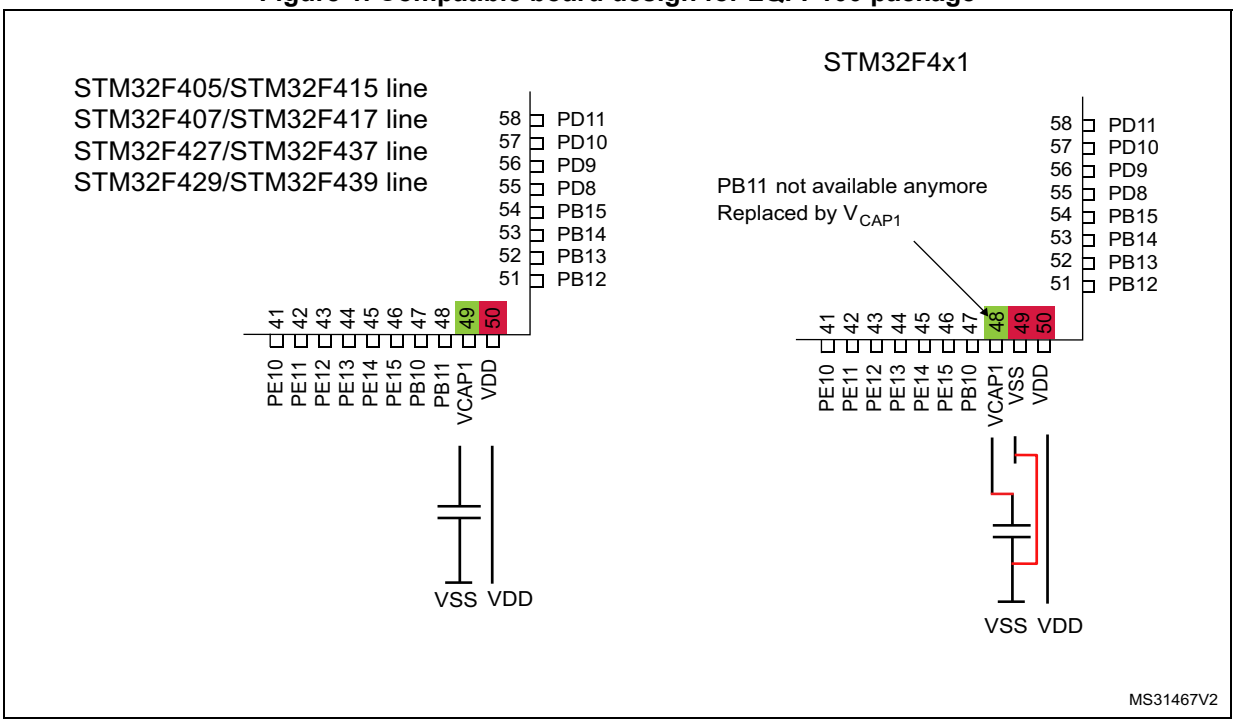

3.15.3 Regulator ON/OFF and internal power supply supervisor availability

Table 3. Regulator ON/OFF and internal power supply supervisor availability

Package	Regulator ON	Regulator OFF	Power supply supervisor ON	Power supply supervisor OFF
UFQFPN48	Yes	No	Yes	No
WLCSP49	Yes	No	Yes PDR_ON set to VDD	Yes PDR_ON external control(1)
LQFP64	Yes	No	Yes	No
LQFP100	Yes	No	Yes	No
UFBGA100	Yes BYPASS_REG set to VSS	Yes BYPASS_REG set to VDD	Yes PDR_ON set to VDD	Yes PDR_ON external control (1)

1. Refer to *Section 3.14: Power supply supervisor*

3.16 Real-time clock (RTC) and backup registers

The backup domain includes:

- The real-time clock (RTC)
- 20 backup registers

The real-time clock (RTC) is an independent BCD timer/counter. Dedicated registers contain the second, minute, hour (in 12/24 hour), week day, date, month, year, in BCD (binary-coded decimal) format. Correction for 28, 29 (leap year), 30, and 31 day of the month are performed automatically. The RTC features a reference clock detection, a more precise second source clock (50 or 60 Hz) can be used to enhance the calendar precision. The RTC provides a programmable alarm and programmable periodic interrupts with wakeup from Stop and Standby modes. The sub-seconds value is also available in binary format.

It is clocked by a 32.768 kHz external crystal, resonator or oscillator, the internal low-power RC oscillator or the high-speed external clock divided by 128. The internal low-speed RC has a typical frequency of 32 kHz. The RTC can be calibrated using an external 512 Hz output to compensate for any natural quartz deviation.

Two alarm registers are used to generate an alarm at a specific time and calendar fields can be independently masked for alarm comparison. To generate a periodic interrupt, a 16-bit programmable binary auto-reload downcounter with programmable resolution is available and allows automatic wakeup and periodic alarms from every 120 µs to every 36 hours.

A 20-bit prescaler is used for the time base clock. It is by default configured to generate a time base of 1 second from a clock at 32.768 kHz.

The backup registers are 32-bit registers used to store 80 bytes of user application data when V_{DD} power is not present. Backup registers are not reset by a system, a power reset, or when the device wakes up from the Standby mode (see *Section 3.17: Low-power modes*).

Additional 32-bit registers contain the programmable alarm subseconds, seconds, minutes, hours, day, and date.

3.25 Secure digital input/output interface (SDIO)

An SD/SDIO/MMC host interface is available, that supports MultiMediaCard System Specification Version 4.2 in three different databus modes: 1-bit (default), 4-bit and 8-bit.

The interface allows data transfer at up to 48 MHz, and is compliant with the SD Memory Card Specification Version 2.0.

The SDIO Card Specification Version 2.0 is also supported with two different databus modes: 1-bit (default) and 4-bit.

The current version supports only one SD/SDIO/MMC4.2 card at any one time and a stack of MMC4.1 or previous.

In addition to SD/SDIO/MMC, this interface is fully compliant with the CE-ATA digital protocol Rev1.1.

3.26 Universal serial bus on-the-go full-speed (OTG_FS)

The devices embed an USB OTG full-speed device/host/OTG peripheral with integrated transceivers. The USB OTG FS peripheral is compliant with the USB 2.0 specification and with the OTG 1.0 specification. It has software-configurable endpoint setting and supports suspend/resume. The USB OTG full-speed controller requires a dedicated 48 MHz clock that is generated by a PLL connected to the HSE oscillator. The major features are:

- Combined Rx and Tx FIFO size of 320 × 35 bits with dynamic FIFO sizing
- Supports the session request protocol (SRP) and host negotiation protocol (HNP)
- 4 bidirectional endpoints
- 8 host channels with periodic OUT support
- HNP/SNP/IP inside (no need for any external resistor)
- For OTG/Host modes, a power switch is needed in case bus-powered devices are connected

3.27 General-purpose input/outputs (GPIOs)

Each of the GPIO pins can be configured by software as output (push-pull or open-drain, with or without pull-up or pull-down), as input (floating, with or without pull-up or pull-down) or as peripheral alternate function. Most of the GPIO pins are shared with digital or analog alternate functions. All GPIOs are high-current-capable and have speed selection to better manage internal noise, power consumption and electromagnetic emission.

The I/O configuration can be locked if needed by following a specific sequence in order to avoid spurious writing to the I/Os registers.

Fast I/O handling allowing maximum I/O toggling up to 84 MHz.

3.28 Analog-to-digital converter (ADC)

One 12-bit analog-to-digital converter is embedded and shares up to 16 external channels, performing conversions in the single-shot or scan mode. In scan mode, automatic conversion is performed on a selected group of analog inputs.

Table 8. STM32F401xB/STM32F401xC pin definitions (continued)

Pin Number					Pin name (function after reset)(1)	Pin type	I/O structure	Notes	Alternate functions	Additional functions
UQFN48	WLCSP49	LQFP64	LQFP100	UFBGA100						
3	C7	3	8	D1	PC14-OSC32_IN (PC14)	I/O	FT	(2) (3) (4)	EVENTOUT	OSC32_IN
4	C6	4	9	E1	PC15-OSC32_OUT (PC15)	I/O	FT	(2) (3) (4)	EVENTOUT	OSC32_OUT
-	-	-	10	F2	VSS	S	-	-	-	-
-	-	-	11	G2	VDD	S	-	-	-	-
5	D7	5	12	F1	PH0-OSC_IN (PH0)	I/O	FT	(4)	EVENTOUT	OSC_IN
6	D6	6	13	G1	PH1-OSC_OUT (PH1)	I/O	FT	(4)	EVENTOUT	OSC_OUT
7	E7	7	14	H2	NRST	I/O	FT	-	EVENTOUT	-
-	-	8	15	H1	PC0	I/O	FT	-	EVENTOUT	ADC1_IN10
-	-	9	16	J2	PC1	I/O	FT	-	EVENTOUT	ADC1_IN11
-	-	10	17	J3	PC2	I/O	FT	-	SPI2_MISO, I2S2ext_SD, EVENTOUT	ADC1_IN12
-	-	11	18	K2	PC3	I/O	FT	-	SPI2_MOSI/I2S2_SD, EVENTOUT	ADC1_IN13
-	-	-	19	-	VDD	S	-	-	-	-
8	E6	12	20	-	VSSA/VREF-	S	-	-	-	-
-	-	-	-	J1	VSSA	S	-	-	-	-
-	-	-	-	K1	VREF-	S	-	-	-	-
9	-	13	-	-	VDDA/VREF+	S	-	-	-	-
-	-	-	21	L1	VREF+	S	-	-	-	-
-	F7	-	22	M1	VDDA	S	-	-	-	-
10	F6	14	23	L2	PA0	I/O	FT	(5)	USART2_CTS, TIM2_CH1/TIM2_ETR, TIM5_CH1, EVENTOUT	ADC1_IN0, WKUP
11	G7	15	24	M2	PA1	I/O	FT	-	USART2_RTS, TIM2_CH2, TIM5_CH2, EVENTOUT	ADC1_IN1
12	E5	16	25	K3	PA2	I/O	FT	-	USART2_TX, TIM2_CH3, TIM5_CH3, TIM9_CH1, EVENTOUT	ADC1_IN2

Table 12. Current characteristics

Symbol	Ratings	Max.	Unit
ΣI_{VDD}	Total current into sum of all V_{DD_x} power lines (source)(1)	160	mA
ΣI_{VSS}	Total current out of sum of all V_{SS_x} ground lines (sink)(1)	-160	
I_{VDD}	Maximum current into each V_{DD_x} power line (source)(1)	100	
I_{VSS}	Maximum current out of each V_{SS_x} ground line (sink)(1)	-100	
I_{IO}	Output current sunk by any I/O and control pin	25	
	Output current sourced by any I/O and control pin	-25	
ΣI_{IO}	Total output current sunk by sum of all I/O and control pins (2)	120	
	Total output current sourced by sum of all I/Os and control pins(2)	-120	
$I_{INJ(PIN)}$ (3)	Injected current on FT pins (4)	–5/+0	
	Injected current on NRST and B pins (4)		
$\Sigma I_{INJ(PIN)}$	Total injected current (sum of all I/O and control pins)(5)	±25	

1. All main power (V_{DD}, V_{DDA}) and ground (V_{SS}, V_{SSA}) pins must always be connected to the external power supply, in the permitted range.
2. This current consumption must be correctly distributed over all I/Os and control pins. The total output current must not be sunk/sourced between two consecutive power supply pins referring to high pin count LQFP packages.
3. Negative injection disturbs the analog performance of the device. See note in *Section 6.3.20: 12-bit ADC characteristics*.
4. Positive injection is not possible on these I/Os and does not occur for input voltages lower than the specified maximum value.
5. When several inputs are submitted to a current injection, the maximum $\Sigma I_{INJ(PIN)}$ is the absolute sum of the positive and negative injected currents (instantaneous values).

Table 13. Thermal characteristics

Symbol	Ratings	Value	Unit
T_{STG}	Storage temperature range	–65 to +150	°C
T_J	Maximum junction temperature	125	
T_{LEAD}	Maximum lead temperature during soldering (WLCSP49, LQFP64/100, UFQFPN48, UFBGA100)	see note (1)	

1. Compliant with JEDEC Std J-STD-020D (for small body, Sn-Pb or Pb assembly), the ST ECOPACK® 7191395 specification, and the European directive on Restrictions on Hazardous Substances (ROHS directive 2011/65/EU, July 2011).

Table 33. Peripheral current consumption (continued)

Peripheral		I_{DD} (typ)	Unit
APB2 (up to 84MHz)	TIM1	5.71	µA/MHz
	TIM9	2.86	
	TIM10	1.79	
	TIM11	2.02	
	ADC1(2)	2.98	
	SPI1	1.19	
	USART1	3.10	
	USART6	2.86	
	SDIO	5.95	
	SPI4	1.31	
	SYSCFG	0.71	

1. I2SMOD bit set in SPI_I2SCFGR register, and then the I2SE bit set to enable I2S peripheral.
2. When the ADC is ON (ADON bit set in the ADC_CR2 register), add an additional power consumption of 1.6 mA for the analog part.

6.3.7 Wakeup time from low-power modes

The wakeup times given in *Table 34* are measured starting from the wakeup event trigger up to the first instruction executed by the CPU:

- For Stop or Sleep modes: the wakeup event is WFE.
- WKUP (PA0) pin is used to wakeup from Standby, Stop and Sleep modes.

All timings are derived from tests performed under ambient temperature and V_{DD}=3.3 V.

Table 34. Low-power mode wakeup timings(1)

Symbol	Parameter	Min(1)	Typ(1)	Max(1)	Unit
$t_{WUSLEEP}$(2)	Wakeup from Sleep mode	-	4	6	CPU clock cycle
t_{WUSTOP}(2)	Wakeup from Stop mode, usage of main regulator	-	13.5	14.5	µs
	Wakeup from Stop mode, usage of main regulator, Flash memory in Deep power down mode	-	105	111	
	Wakeup from Stop mode, regulator in low power mode	-	21	33	
	Wakeup from Stop mode, regulator in low power mode, Flash memory in Deep power down mode	-	113	130	
$t_{WUSTDBY}$(2)(3)	Wakeup from Standby mode	-	314	407	µs

1. Guaranteed by characterization.
2. The wakeup times are measured from the wakeup event to the point in which the application code reads the first instruction.
3. $t_{WUSTDBY}$ maximum value is given at –40 °C.

series combination of C_{L1} and C_{L2}. PCB and MCU pin capacitance must be included (10 pF can be used as a rough estimate of the combined pin and board capacitance) when sizing C_{L1} and C_{L2}.

Note: For information on selecting the crystal, refer to the application note AN2867 "Oscillator design guide for ST microcontrollers" available from the ST website www.st.com.

Figure 24. Typical application with an 8 MHz crystal

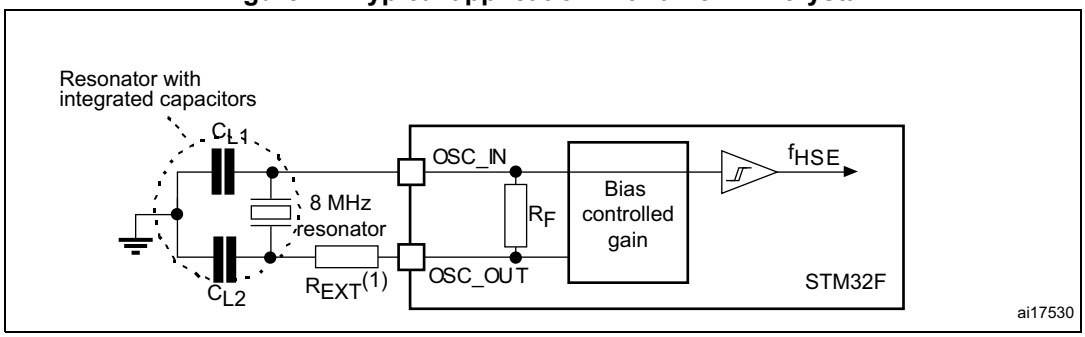

1. R_{EXT} value depends on the crystal characteristics.

Low-speed external clock generated from a crystal/ceramic resonator

The low-speed external (LSE) clock can be supplied with a 32.768 kHz crystal/ceramic resonator oscillator. All the information given in this paragraph are based on characterization results obtained with typical external components specified in *Table 38*. In the application, the resonator and the load capacitors have to be placed as close as possible to the oscillator pins in order to minimize output distortion and startup stabilization time. Refer to the crystal resonator manufacturer for more details on the resonator characteristics (frequency, package, accuracy).

Table 38. LSE oscillator characteristics (f_{LSE} = 32.768 kHz) (1)

Symbol	Parameter	Conditions	Min	Typ	Max	Unit
R_F	Feedback resistor		-	18.4	-	MΩ
I_{DD}	LSE current consumption		-	-	1	µA
G_m_crit_max	Maximum critical crystal g_m	Startup	-	-	0.56	µA/V
$t_{SU(LSE)}$(2)	startup time	V_{DD} is stabilized	-	2	-	s

1. Guaranteed by design.
2. $t_{SU(LSE)}$ is the startup time measured from the moment it is enabled (by software) to a stabilized 32.768 kHz oscillation is reached. This value is guaranteed by characterization. It is measured for a standard crystal resonator and it can vary significantly with the crystal manufacturer.

Note: For information on selecting the crystal, refer to the application note AN2867 "Oscillator design guide for ST microcontrollers" available from the ST website www.st.com.

Electromagnetic Interference (EMI)

The electromagnetic field emitted by the device are monitored while a simple application, executing EEMBC code, is running. This emission test is compliant with SAE IEC61967-2 standard which specifies the test board and the pin loading.

Table 49. EMI characteristics for WLCSP49

Symbol	Parameter	Conditions	Monitored frequency band	Max vs. [f_{HSE}/f_{CPU}]	Unit
				25/84 MHz	
S_{EMI}	Peak level	V_{DD} = 3.3 V, T_A = 25 °C, conforming to IEC61967-2	0.1 to 30 MHz	-6	dBµV
			30 to 130 MHz	-6	
			130 MHz to 1 GHz	-10	
			SAE EMI Level	1.5	-

Table 50. EMI characteristics for LQFP100

Symbol	Parameter	Conditions	Monitored frequency band	Max vs. [f_{HSE}/f_{CPU}]	Unit
				25/84 MHz	
S_{EMI}	Peak level	V_{DD} = 3.3 V, T_A = 25 °C, conforming to IEC61967-2	0.1 to 30 MHz	18	dBµV
			30 to 130 MHz	23	
			130 MHz to 1 GHz	12	
			SAE EMI Level	3.5	-

6.3.14 Absolute maximum ratings (electrical sensitivity)

Based on three different tests (ESD, LU) using specific measurement methods, the device is stressed in order to determine its performance in terms of electrical sensitivity.

Electrostatic discharge (ESD)

Electrostatic discharges (a positive then a negative pulse separated by 1 second) are applied to the pins of each sample according to each pin combination. The sample size depends on the number of supply pins in the device (3 parts × (n+1) supply pins). This test conforms to the JESD22-A114/C101 standard.

Figure 30. FT I/O input characteristics

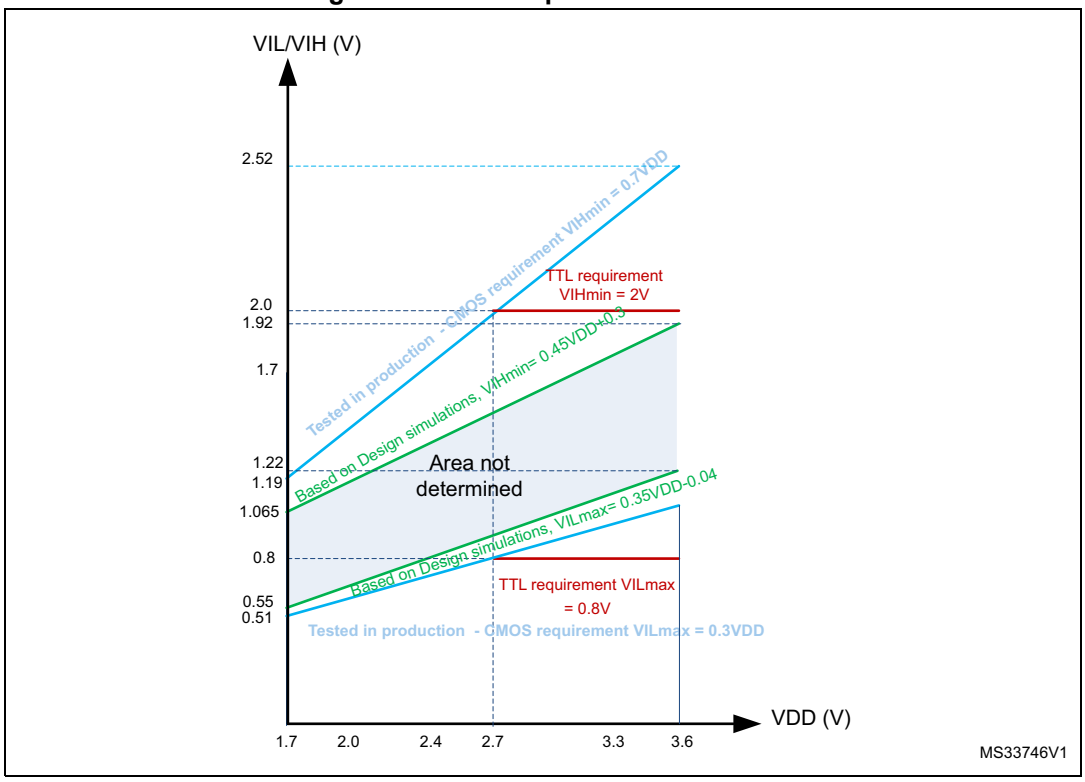

Output driving current

The GPIOs (general purpose input/outputs) can sink or source up to ±8 mA, and sink or source up to ±20 mA (with a relaxed V_{OL}/V_{OH}) except PC13, PC14 and PC15 which can sink or source up to ±3mA. When using the PC13 to PC15 GPIOs in output mode, the speed should not exceed 2 MHz with a maximum load of 30 pF.

In the user application, the number of I/O pins which can drive current must be limited to respect the absolute maximum rating specified in *Section 6.2*. In particular:

- The sum of the currents sourced by all the I/Os on $V_{DD,}$ plus the maximum Run consumption of the MCU sourced on $V_{DD,}$ cannot exceed the absolute maximum rating ΣI_{VDD} (see *Table 12*).
- The sum of the currents sunk by all the I/Os on V_{SS} plus the maximum Run consumption of the MCU sunk on V_{SS} cannot exceed the absolute maximum rating ΣI_{VSS} (see *Table 12*).

Output voltage levels

Unless otherwise specified, the parameters given in *Table 55* are derived from tests performed under ambient temperature and V_{DD} supply voltage conditions summarized in *Table 14*. All I/Os are CMOS and TTL compliant.

Figure 31. I/O AC characteristics definition

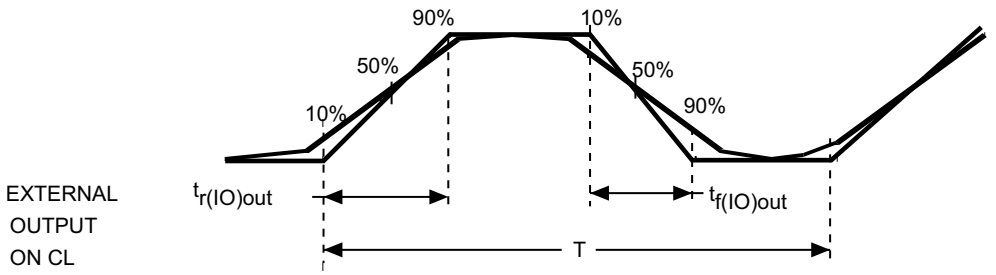

Maximum frequency is achieved if ($t_r + t_f$) ≤ (2/3)T and if the duty cycle is (45-55%) when loaded by CL specified in the table " *I/O AC characteristics*".

ai14131d

6.3.17 NRST pin characteristics

The NRST pin input driver uses CMOS technology. It is connected to a permanent pull-up resistor, R_{PU} (see *Table 54*).

Unless otherwise specified, the parameters given in *Table 57* are derived from tests performed under the ambient temperature and V_{DD} supply voltage conditions summarized in *Table 14*. Refer to *Table 54: I/O static characteristics* for the values of VIH and VIL for NRST pin.

Table 57. NRST pin characteristics

Symbol	Parameter	Conditions	Min	Typ	Max	Unit
R_{PU}	Weak pull-up equivalent resistor(1)	$V_{IN} = V_{SS}$	30	40	50	kΩ
$V_{F(NRST)}$(2)	NRST Input filtered pulse		-	-	100	ns
$V_{NF(NRST)}$(2)	NRST Input not filtered pulse	V_{DD} > 2.7 V	300	-	-	ns
T_{NRST_OUT}	Generated reset pulse duration	Internal Reset source	20	-	-	µs

1. The pull-up is designed with a true resistance in series with a switchable PMOS. This PMOS contribution to the series resistance must be minimum (~10% order).
2. Guaranteed by design.

Table 61. SPI dynamic characteristics(1) (continued)

Symbol	Parameter	Conditions	Min	Typ	Max	Unit
$t_{v(MO)}$	Data output valid time	Master mode (after enable edge)	-	3	5	ns
$t_{h(MO)}$	Data output hold time	Master mode (after enable edge)	2	-	-	ns

1. Guaranteed by characterization.
2. Maximum frequency in Slave transmitter mode is determined by the sum of $t_{v(SO)}$ and $t_{su(MI)}$ which has to fit into SCK low or high phase preceding the SCK sampling edge. This value can be achieved when the SPI communicates with a master having $t_{su(MI)}$ = 0 while Duty(SCK) = 50%

Figure 34. SPI timing diagram - slave mode and CPHA = 0

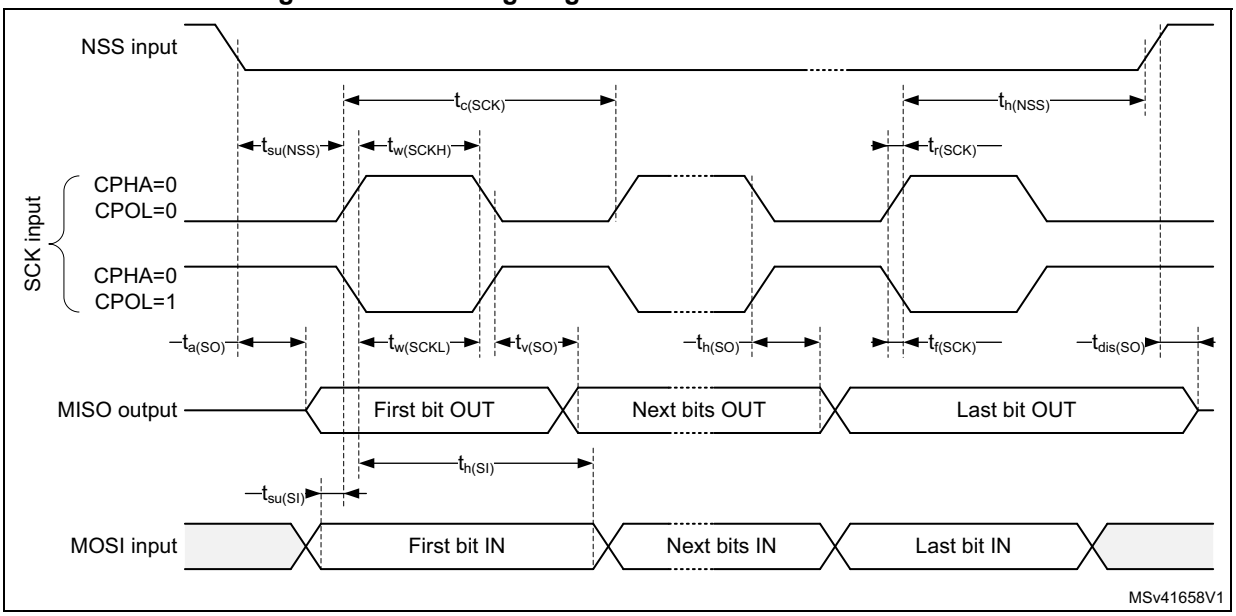

Figure 35. SPI timing diagram - slave mode and CPHA = 1(1)

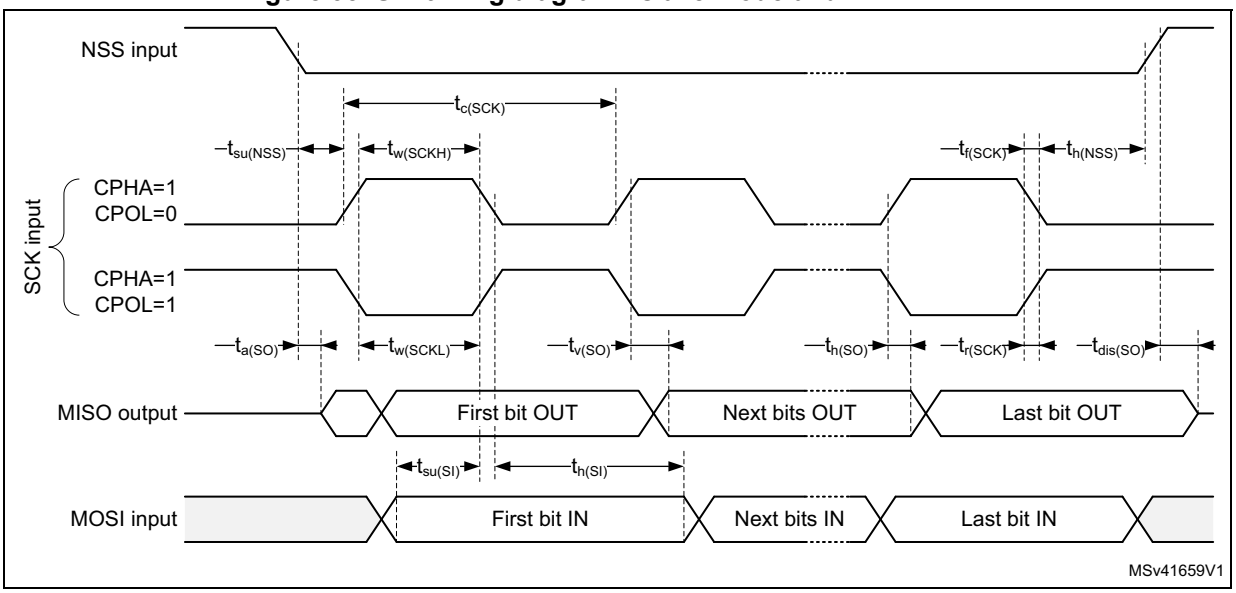

Figure 37. I²S slave timing diagram (Philips protocol)(1)

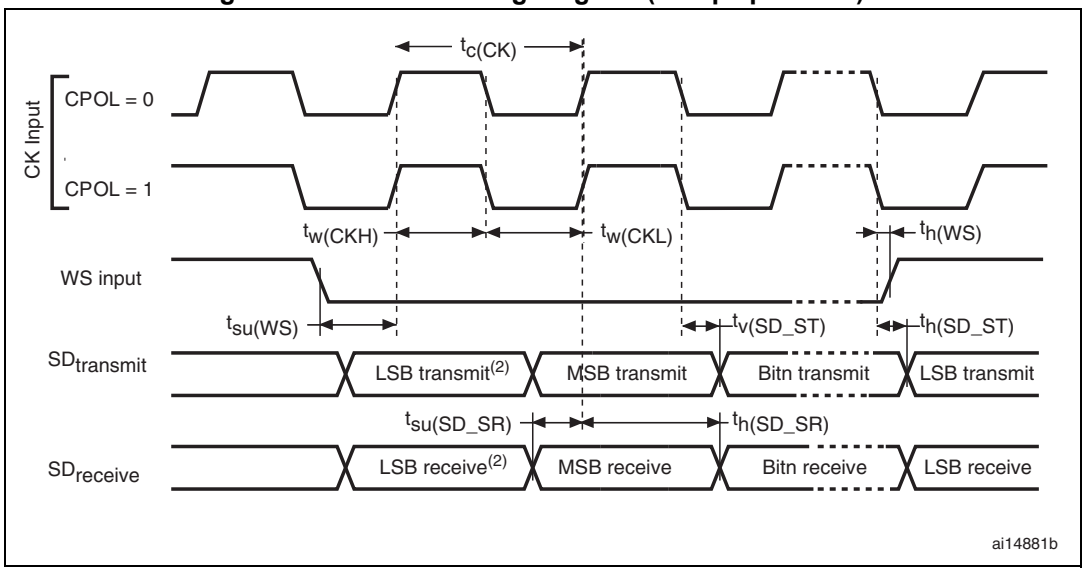

1. LSB transmit/receive of the previously transmitted byte. No LSB transmit/receive is sent before the first byte.

Figure 38. I²S master timing diagram (Philips protocol)(1)

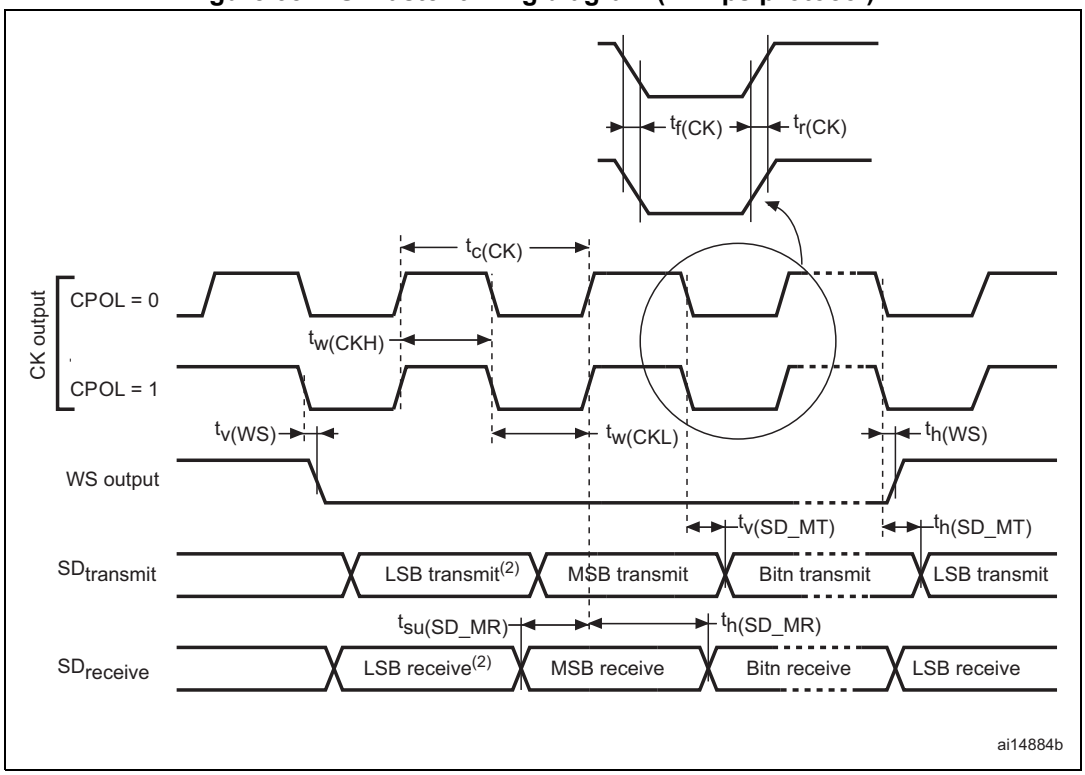

1. LSB transmit/receive of the previously transmitted byte. No LSB transmit/receive is sent before the first byte.

USB OTG full speed (FS) characteristics

This interface is present in USB OTG FS controller.

Table 63. USB OTG FS startup time

Symbol	Parameter	Max	Unit
$t_{STARTUP}$(1)	USB OTG FS transceiver startup time	1	µs

1. Guaranteed by design.

Table 64. USB OTG FS DC electrical characteristics

Symbol		Parameter	Conditions	Min.(1)	Typ.	Max.(1)	Unit
Input levels	V_{DD}	USB OTG FS operating voltage		3.0(2)	-	3.6	V
	V_{DI}(3)	Differential input sensitivity	I(USB_FS_DP/DM)	0.2	-	-	V
	V_{CM}(3)	Differential common mode range	Includes V_{DI} range	0.8	-	2.5	
	V_{SE}(3)	Single ended receiver threshold		1.3	-	2.0	
Output levels	V_{OL}	Static output level low	R_L of 1.5 kΩ to 3.6 V(4)	-	-	0.3	V
	V_{OH}	Static output level high	R_L of 15 kΩ to V_{SS}(4)	2.8	-	3.6	
R_{PD}		PA11, PA12 (USB_FS_DM/DP)	$V_{IN} = V_{DD}$	17	21	24	kΩ
		PA9 (OTG_FS_VBUS)		0.65	1.1	2.0	
R_{PU}		PA11, PA12 (USB_FS_DM/DP)	$V_{IN} = V_{SS}$	1.5	1.8	2.1	
		PA9 (OTG_FS_VBUS)	$V_{IN} = V_{SS}$	0.25	0.37	0.55	

1. All the voltages are measured from the local ground potential.
2. The USB OTG FS functionality is ensured down to 2.7 V but not the full USB full speed electrical characteristics which are degraded in the 2.7-to-3.0 V V_{DD} voltage range.
3. Guaranteed by design.
4. R_L is the load connected on the USB OTG FS drivers.

Note: When VBUS sensing feature is enabled, PA9 should be left at their default state (floating input), not as alternate function. A typical 200 µA current consumption of the embedded sensing block (current to voltage conversion to determine the different sessions) can be observed on PA9 when the feature is enabled.

General PCB design guidelines

Power supply decoupling should be performed as shown in *Figure 42* or *Figure 43*, depending on whether V_{REF+} is connected to V_{DDA} or not. The 10 nF capacitors should be ceramic (good quality). They should be placed them as close as possible to the chip.

Figure 42. Power supply and reference decoupling (V_{REF+} not connected to V_{DDA})

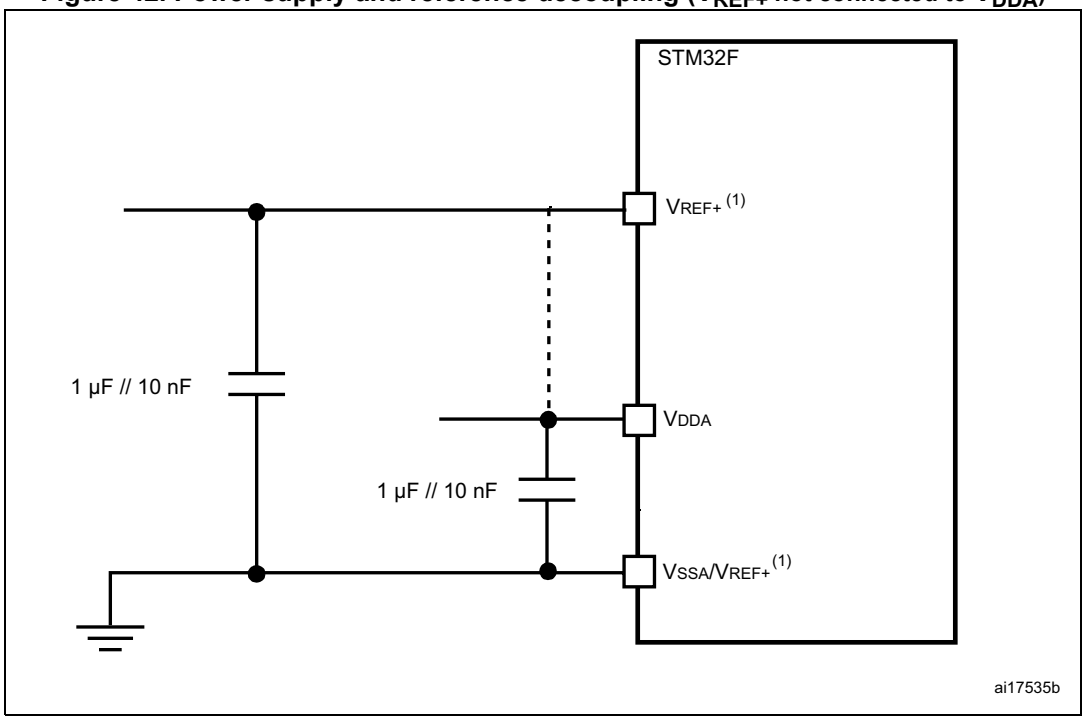

1. V_{REF+} and V_{REF-} inputs are both available on UFBGA100. V_{REF+} is also available on LQFP100. When V_{REF+} and V_{REF-} are not available, they are internally connected to V_{DDA} and V_{SSA}.

Table 77. Dynamic characteristics: SD / MMC characteristics(1)(2) (continued)

Symbol	Parameter	Conditions	Min	Typ	Max	Unit
CMD, D inputs (referenced to CK) in SD default mode						
t_{ISUD}	Input setup time SD	fpp = 24MHz	1.5	-	-	ns
t_{IHD}	Input hold time SD	fpp = 24MHz	0.5	-	-	
CMD, D outputs (referenced to CK) in SD default mode						
t_{OVD}	Output valid default time SD	fpp =24MHz	-	4.5	6.5	ns
t_{OHD}	Output hold default time SD	fpp =24MHz	3.5	-	-	

1. Guaranteed by characterization results.
2. V_{DD} = 2.7 to 3.6 V.

6.3.25 RTC characteristics

Table 78. RTC characteristics

Symbol	Parameter	Conditions	Min	Max
-	f_{PCLK1}/RTCCLK frequency ratio	Any read/write operation from/to an RTC register	4	-

LQFP64 device marking

The following figure gives an example of topside marking orientation versus pin 1 identifier location.

Other optional marking or inset/upset marks, which depend on supply chain operations, are not indicated below.

Figure 54. LQFP64 marking example (top view)

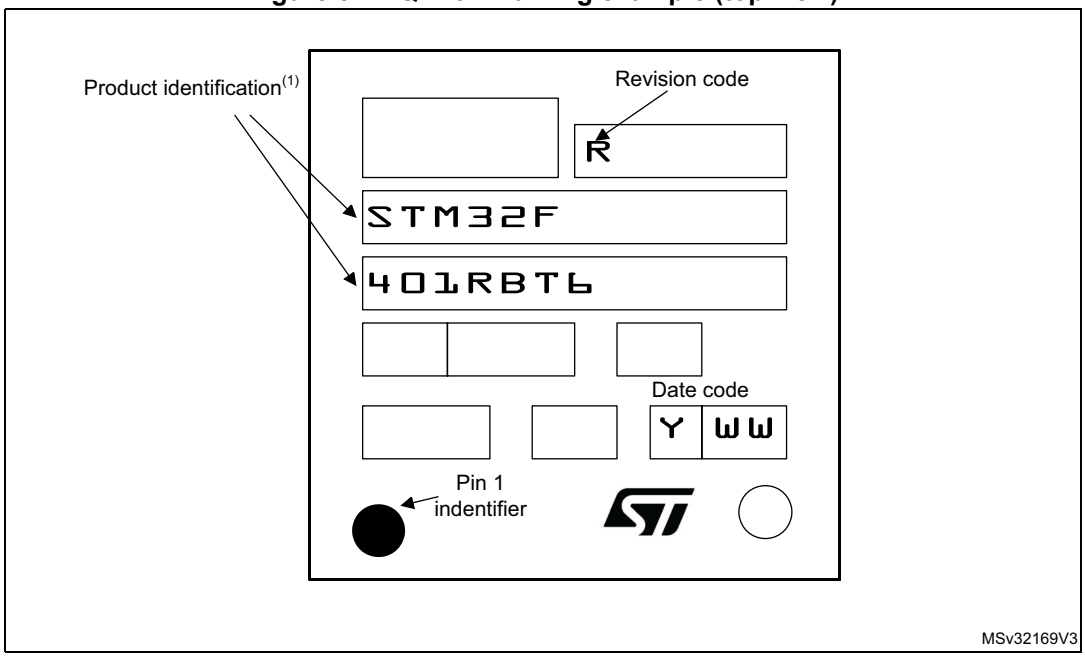

1. Parts marked as “ES”, “E” or accompanied by an Engineering Sample notification letter, are not yet qualified and therefore not yet ready to be used in production and any consequences deriving from such usage will not be at ST charge. In no event, ST will be liable for any customer usage of these engineering samples in production. ST Quality has to be contacted prior to any decision to use these Engineering samples to run qualification activity.