Welcome to E-XFL.COM

What is "Embedded - Microcontrollers"?

"Embedded - Microcontrollers" refer to small, integrated circuits designed to perform specific tasks within larger systems. These microcontrollers are essentially compact computers on a single chip, containing a processor core, memory, and programmable input/output peripherals. They are called "embedded" because they are embedded within electronic devices to control various functions, rather than serving as standalone computers. Microcontrollers are crucial in modern electronics, providing the intelligence and control needed for a wide range of applications.

Applications of "Embedded - Microcontrollers"

Details	
Product Status	Active
Core Processor	M8C
Core Size	8-Bit
Speed	12MHz
Connectivity	I²C, SPI, UART/USART
Peripherals	POR, PWM, WDT
Number of I/O	16
Program Memory Size	8KB (8K x 8)
Program Memory Type	FLASH
EEPROM Size	-
RAM Size	512 x 8
Voltage - Supply (Vcc/Vdd)	2.4V ~ 5.25V
Data Converters	A/D 28x8b
Oscillator Type	Internal
Operating Temperature	-40°C ~ 125°C (TA)
Mounting Type	Surface Mount
Package / Case	20-SSOP (0.209", 5.30mm Width)
Supplier Device Package	20-SSOP
Purchase URL	https://www.e-xfl.com/product-detail/infineon-technologies/cy8c21334-12pvxe

PSoC Functional Overview

The PSoC family consists of many devices with on-chip controllers. These devices are designed to replace multiple traditional microcontroller unit (MCU)-based system components with one, low-cost single-chip programmable component. A PSoC device includes configurable blocks of analog and digital logic, and programmable interconnect. This architecture makes it possible for you to create customized peripheral configurations, to match the requirements of each individual application. Additionally, a fast central processing unit (CPU), flash program memory, SRAM data memory, and configurable I/O are included in a range of convenient pinouts.

The PSoC architecture, as illustrated in the Logic Block Diagram on page 1, comprises of four main areas: the core, the system resources, the digital system, and the analog system. Configurable global bus resources allow all the device resources to be combined into a complete custom system. Each CY8C21x34 PSoC device includes four digital blocks and four analog blocks. Depending on the PSoC package, up to 24 GPIOs are also included. The GPIOs provide access to the global digital and analog interconnects.

The PSoC Core

The PSoC core is a powerful engine that supports a rich instruction set. It encompasses SRAM for data storage, an interrupt controller, sleep, and watchdog timers, and an internal main oscillator (IMO) and internal low-speed oscillator (ILO). The CPU core, called the M8C, is a powerful processor with speeds up to 12 MHz. The M8C is a two-million instructions per second (MIPS) 8-bit Harvard-architecture microprocessor.

System resources provide additional capability, such as digital clocks for increased flexibility, I^2C functionality for implementing an I^2C master, slave, or multi-master, an internal voltage reference that provides an absolute value of 1.3 V to a number of PSoC subsystems, and various system resets supported by the M8C.

The digital system is composed of an array of digital PSoC blocks, which can be configured into any number of digital peripherals. The digital blocks can be connected to the GPIO through a series of global buses that can route any signal to any pin. This frees designs from the constraints of a fixed peripheral controller.

The analog system is composed of four analog PSoC blocks, supporting comparators and analog-to-digital conversion with up to 10 bits of precision.

The Digital System

The digital system is composed of four digital PSoC blocks. Each block is an 8-bit resource that can be used alone or combined with other blocks to form 8-, 16-, 24-, and 32-bit peripherals, which are called user modules. Digital peripheral configurations include those listed.

- PWMs (8- to 32-bit)
- PWMs with dead band (8- to 24-bit)
- Counters (8- to 32-bit)
- Timers (8- to 32-bit)
- Full or half-duplex 8-bit UART with selectable parity
- SPI master and slave
- I^2C master, slave, or multi-master (implemented in a dedicated I^2C block)
- Cyclical redundancy checker/generator (16-bit)
- Infrared Data Association (IrDA)
- PRS generators (8- to 32-bit)

The digital blocks can be connected to any GPIO through a series of global buses that can route any signal to any pin. The buses also allow for signal multiplexing and for performing logic operations. This configurability frees your designs from the constraints of a fixed peripheral controller.

Figure 1. Digital System Block Diagram

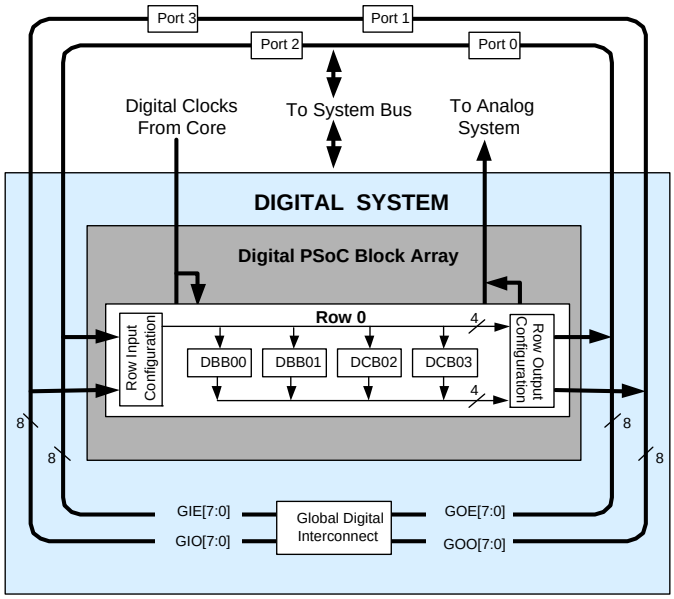

Digital blocks are provided in rows of four, where the number of blocks varies by PSoC device family. This allows you the optimum choice of system resources for your application. Family resources are shown in Table 1 on page 5.

The Analog System

The analog system is composed of four configurable blocks, allowing the creation of complex analog signal flows. Analog peripherals are very flexible and can be customized to support specific application requirements. Some of the common PSoC analog functions for this device (most available as user modules) are listed.

- ADCs (single or dual, with up to 10-bit resolution)
- Pin-to-pin comparator
- Single-ended comparators (up to two) with absolute (1.3 V) reference or 8-bit DAC reference
- 1.3 V reference (as a system resource)

In most PSoC devices, analog blocks are provided in columns of three, which includes one continuous time (CT) and two switched capacitor (SC) blocks. The CY8C21x34 devices provide limited functionality type 'E' analog blocks. Each column contains one CT type 'E' block and one SC type 'E' block. Refer to the *PSoC Programmable System-on-Chip Technical Reference Manual* for detailed information on the CY8C21x34's type 'E' analog blocks.

Figure 2. Analog System Block Diagram

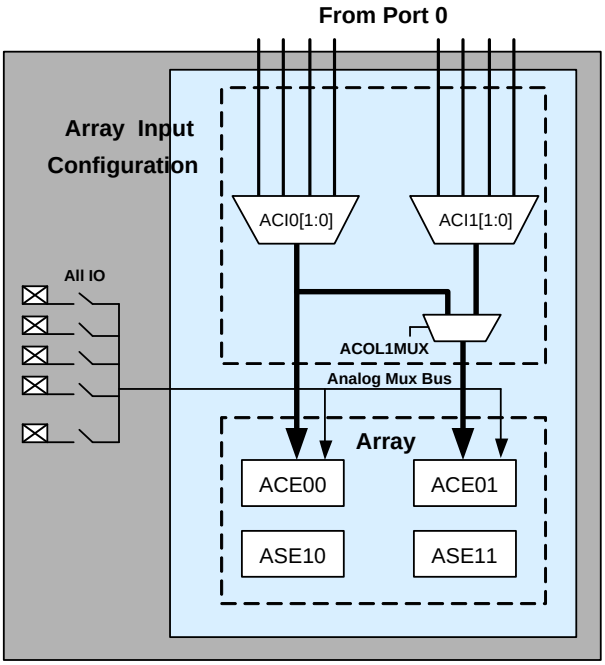

The Analog Multiplexer System

The analog mux bus can connect to every GPIO pin. Pins can be connected to the bus individually or in any combination. The bus also connects to the analog system for analysis with comparators and ADCs. An additional 8:1 analog input multiplexer provides a second path to bring Port 0 pins to the analog array.

Switch-control logic enables selected pins to precharge continuously under hardware control. This enables capacitive measurement for applications such as touch sensing. Other multiplexer applications include:

- Track pad, finger sensing.
- Chip-wide mux that allows analog input from any I/O pin.
- Crosspoint connection between any I/O pin combination.

Additional System Resources

System resources, some of which have been previously listed, provide additional capability useful for complete systems. Brief statements describing the merits of each system resource are presented.

- Digital clock dividers provide three customizable clock frequencies for use in applications. The clocks can be routed to both the digital and analog systems. Additional clocks can be generated using digital PSoC blocks as clock dividers.
- The I^2C module provides communication up to 400 kHz over two wires. Slave, master, and multi-master modes are all supported.
- LVD interrupts can signal the application of falling voltage levels, while the advanced power-on reset (POR) circuit eliminates the need for a system supervisor.
- An internal 1.3-V voltage reference provides an absolute reference for the analog system, including ADCs and DACs.
- Versatile analog multiplexer system

PSoC Device Characteristics

Depending on your PSoC device characteristics, the digital and analog systems can have a varying number of digital and analog blocks. The following table lists the resources available for specific PSoC device groups. The PSoC device covered by this data sheet is highlighted in Table 1.

Table 1. PSoC Device Characteristics

PSoC Part Number	Digital I/O	Digital Rows	Digital Blocks	Analog Inputs	Analog Outputs	Analog Columns	Analog Blocks	SRAM Size	Flash Size
CY8C29x66[1]	up to 64	4	16	up to 12	4	4	12	2 K	32 K
CY8C28xxx	up to 44	up to 3	up to 12	up to 44	up to 4	up to 6	up to 12 + 4[2]	1 K	16 K
CY8C27x43	up to 44	2	8	up to 12	4	4	12	256	16 K
CY8C24x94[1]	up to 56	1	4	up to 48	2	2	6	1 K	16 K
CY8C24x23A[1]	up to 24	1	4	up to 12	2	2	6	256	4 K
CY8C23x33	up to 26	1	4	up to 12	2	2	4	256	8 K
CY8C22x45[1]	up to 38	2	8	up to 38	0	4	6[2]	1 K	16 K
CY8C21x45[1]	up to 24	1	4	up to 24	0	4	6[2]	512	8 K
CY8C21x34[1]	up to 28	1	4	up to 28	0	2	4[2]	512	8 K
CY8C21x23	up to 16	1	4	up to 8	0	2	4[2]	256	4 K
CY8C20x34[1]	up to 28	0	0	up to 28	0	0	3[2,3]	512	8 K
CY8C20xx6	up to 36	0	0	up to 36	0	0	3[2,3]	up to 2 K	up to 32 K

Getting Started

For in-depth information, along with detailed programming details, see the *PSoC® Technical Reference Manual*.

For up-to-date ordering, packaging, and electrical specification information, see the latest PSoC device datasheets on the web.

Application Notes

Cypress application notes are an excellent introduction to the wide variety of possible PSoC designs.

Development Kits

PSoC Development Kits are available online from and through a growing number of regional and global distributors, which include Arrow, Avnet, Digi-Key, Farnell, Future Electronics, and Newark.

Training

Free PSoC technical training (on demand, webinars, and workshops), which is available online via www.cypress.com, covers a wide variety of topics and skill levels to assist you in your designs.

CYPros Consultants

Certified PSoC consultants offer everything from technical assistance to completed PSoC designs. To contact or become a PSoC consultant go to the CYPros Consultants web site.

Solutions Library

Visit our growing library of solution focused designs. Here you can find various application designs that include firmware and hardware design files that enable you to complete your designs quickly.

Technical Support

Technical support – including a searchable Knowledge Base articles and technical forums – is also available online. If you cannot find an answer to your question, call our Technical Support hotline at 1-800-541-4736.

Notes
1. Automotive qualified devices available in this group.
2. Limited analog functionality.
3. Two analog blocks and one CapSense® block.

Designing with PSoC Designer

The development process for the PSoC device differs from that of a traditional fixed function microprocessor. The configurable analog and digital hardware blocks give the PSoC architecture a unique flexibility that pays dividends in managing specification change during development and by lowering inventory costs. These configurable resources, called PSoC Blocks, have the ability to implement a wide variety of user-selectable functions.

The PSoC development process can be summarized in the following four steps:

1. Select User Modules
2. Configure User Modules
3. Organize and Connect
4. Generate, Verify, and Debug

Select Components

PSoC Designer provides a library of pre-built, pre-tested hardware peripheral components called “user modules.” User modules make selecting and implementing peripheral devices, both analog and digital, simple.

Configure Components

Each of the User Modules you select establishes the basic register settings that implement the selected function. They also provide parameters and properties that allow you to tailor their precise configuration to your particular application. For example, a PWM User Module configures one or more

digital PSoC blocks, one for each 8 bits of resolution. The user module parameters permit you to establish the pulse width and duty cycle. Configure the parameters and properties to correspond to your chosen application. Enter values directly or by selecting values from drop-down menus. All the user modules are documented in datasheets that may be viewed directly in PSoC Designer or on the Cypress website. These user module datasheets explain the internal operation of the User Module and provide performance specifications. Each datasheet describes the use of each user module parameter, and other information you may need to successfully implement your design.

Organize and Connect

You build signal chains at the chip level by interconnecting user modules to each other and the I/O pins. You perform the selection, configuration, and routing so that you have complete control over all on-chip resources.

Generate, Verify, and Debug

When you are ready to test the hardware configuration or move on to developing code for the project, you perform the “Generate Configuration Files” step. This causes PSoC Designer to generate source code that automatically configures the device to your specification and provides the software for the system. The generated code provides application programming interfaces (APIs) with high-level functions to control and respond to hardware events at run time and interrupt service routines that you can adapt as needed.

A complete code development environment allows you to develop and customize your applications in C, assembly language, or both.

The last step in the development process takes place inside PSoC Designer's Debugger (access by clicking the Connect icon). PSoC Designer downloads the HEX image to the ICE where it runs at full speed. PSoC Designer debugging capabilities rival those of systems costing many times more. In addition

to traditional single-step, run-to-breakpoint and watch-variable features, the debug interface provides a large trace buffer and allows you to define complex breakpoint events that include monitoring address and data bus values, memory locations and external signals.

Table 6. Register Map 1 Table: Configuration Space

Name	Addr (1,Hex)	Access	Name	Addr (1,Hex)	Access	Name	Addr (1,Hex)	Access	Name	Addr (1,Hex)	Access
PRT0DM0	00	RW		40		ASE10CR0	80	RW		C0	
PRT0DM1	01	RW		41			81			C1	
PRT0IC0	02	RW		42			82			C2	
PRT0IC1	03	RW		43			83			C3	
PRT1DM0	04	RW		44		ASE11CR0	84	RW		C4	
PRT1DM1	05	RW		45			85			C5	
PRT1IC0	06	RW		46			86			C6	
PRT1IC1	07	RW		47			87			C7	
PRT2DM0	08	RW		48			88			C8	
PRT2DM1	09	RW		49			89			C9	
PRT2IC0	0A	RW		4A			8A			CA	
PRT2IC1	0B	RW		4B			8B			CB	
	0C			4C			8C			CC	
	0D			4D			8D			CD	
	0E			4E			8E			CE	
	0F			4F			8F			CF	
	10			50			90		GDI_O_IN	D0	RW
	11			51			91		GDI_E_IN	D1	RW
	12			52			92		GDI_O_OU	D2	RW
	13			53			93		GDI_E_OU	D3	RW
	14			54			94			D4	
	15			55			95			D5	
	16			56			96			D6	
	17			57			97			D7	
	18			58			98		MUX_CR0	D8	RW
	19			59			99		MUX_CR1	D9	RW
	1A			5A			9A		MUX_CR2	DA	RW
	1B			5B			9B		MUX_CR3	DB	RW
	1C			5C			9C			DC	
	1D			5D			9D		OSC_GO_EN	DD	RW
	1E			5E			9E		OSC_CR4	DE	RW
	1F			5F			9F		OSC_CR3	DF	RW
DBB00FN	20	RW	CLK_CR0	60	RW		A0		OSC_CR0	E0	RW
DBB00IN	21	RW	CLK_CR1	61	RW		A1		OSC_CR1	E1	RW
DBB00OU	22	RW	ABF_CR0	62	RW		A2		OSC_CR2	E2	RW
	23		AMD_CR0	63	RW		A3		VLT_CR	E3	RW
DBB01FN	24	RW	CMP_GO_EN	64	RW		A4		VLT_CMP	E4	R
DBB01IN	25	RW		65			A5		ADC0_TR	E5	RW
DBB01OU	26	RW	AMD_CR1	66	RW		A6		ADC1_TR	E6	RW
	27		ALT_CR0	67	RW		A7			E7	
DCB02FN	28	RW		68			A8		IMO_TR	E8	W
DCB02IN	29	RW		69			A9		ILO_TR	E9	W
DCB02OU	2A	RW		6A			AA		BDG_TR	EA	RW
	2B		CLK_CR3	6B	RW		AB		ECO_TR	EB	W
DCB03FN	2C	RW	TMP_DR0	6C	RW		AC			EC	
DCB03IN	2D	RW	TMP_DR1	6D	RW		AD			ED	
DCB03OU	2E	RW	TMP_DR2	6E	RW		AE			EE	
	2F		TMP_DR3	6F	RW		AF			EF	
	30			70		RDI0RI	B0	RW		F0	
	31			71		RDI0SYN	B1	RW		F1	
	32		ACE00CR1	72	RW	RDI0IS	B2	RW		F2	
	33		ACE00CR2	73	RW	RDI0LT0	B3	RW		F3	
	34			74		RDI0LT1	B4	RW		F4	
	35			75		RDI0RO0	B5	RW		F5	
	36		ACE01CR1	76	RW	RDI0RO1	B6	RW		F6	
	37		ACE01CR2	77	RW		B7		CPU_F	F7	RL
	38			78			B8			F8	
	39			79			B9			F9	
	3A			7A			BA			FA	
	3B			7B			BB			FB	
	3C			7C			BC			FC	
	3D			7D			BD		DAC_CR	FD	RW
	3E			7E			BE		CPU_SCR1	FE	#
	3F			7F			BF		CPU_SCR0	FF	#

Blank fields are Reserved and must not be accessed. # Access is bit specific.

Electrical Specifications

This section presents the DC and AC electrical specifications of the automotive CY8C21x34 PSoC device. For the most up to date electrical specifications, confirm that you have the most recent datasheet by going to the web at http//www.cypress.com.

Specifications are valid for –40 °C ≤ T_A ≤ 125 °C and T_J ≤ 135 °C as specified, except where noted. Refer to Table 15 on page 18 for the electrical specifications for the IMO using slow IMO (SLIMO) mode.

Figure 5. Voltage versus CPU Frequency

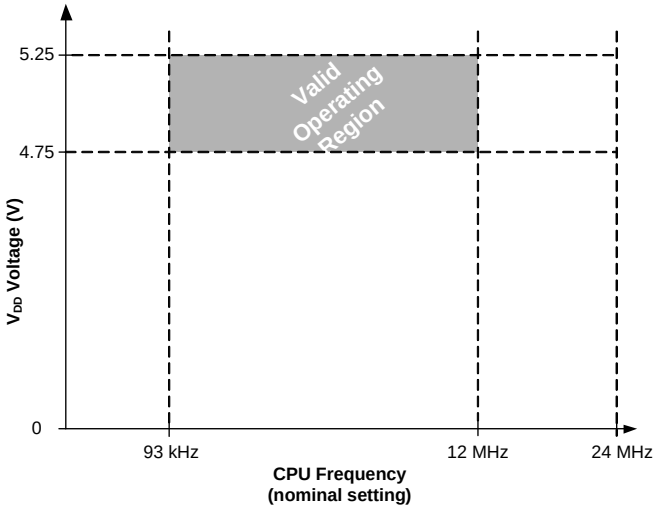

Figure 6. IMO Frequency Trim Options

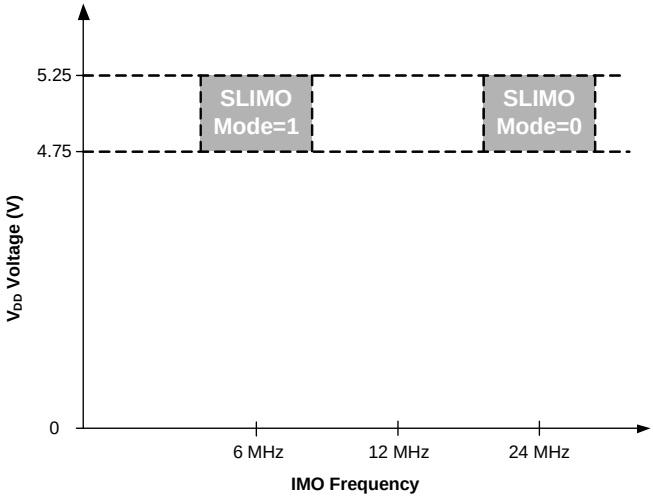

DC Programming Specifications

Table 14 lists guaranteed maximum and minimum specifications for the voltage and temperature ranges: 4.75 V to 5.25 V and –40 °C ≤ T_A ≤ 125 °C. Typical parameters apply to 5 V at 25 °C and are for design guidance only.

Table 14. DC Programming Specifications

Symbol	Description	Min	Typ	Max	Units	Notes
V_{DDP}	V_{DD} for programming and erase	4.5	5	5.5	V	This specification applies to the functional requirements of external programmer tools
V_{DDLV}	Low V_{DD} for verify	4.7	4.8	4.9	V	This specification applies to the functional requirements of external programmer tools
V_{DDHV}	High V_{DD} for verify	5.1	5.2	5.3	V	This specification applies to the functional requirements of external programmer tools
$V_{DDIWRITE}$	Supply voltage for flash write operation	4.75	5.0	5.25	V	This specification applies to this device when it is executing internal flash writes
I_{DDP}	Supply current during programming or verify	–	5	25	mA	
V_{ILP}	Input low voltage during programming or verify	–	–	0.8	V	
V_{IHP}	Input high voltage during programming or verify	2.2	–	–	V	
I_{ILP}	Input current when applying V_{ILP} to P1[0] or P1[1] during programming or verify	–	–	0.2	mA	Driving internal pull-down resistor.
I_{IHP}	Input current when applying V_{IHP} to P1[0] or P1[1] during programming or verify	–	–	1.5	mA	Driving internal pull-down resistor.
V_{OLV}	Output low voltage during programming or verify	–	–	0.75	V	
V_{OHV}	Output high voltage during programming or verify	3.5	–	V_{DD}	V	
$Flash_{ENPB}$	Flash endurance (per block)[9]	100	–	–	–	Erase/write cycles per block.
$Flash_{ENT}$	Flash endurance (total)[9, 10]	12,800	–	–	–	Erase/write cycles.
$Flash_{DR}$	Flash data retention[11]	15	–	–	Years	

Notes

9. For the full temperature range, the user must employ a temperature sensor user module (FlashTemp) or other temperature sensor, and feed the result to the temperature argument before writing. Refer to the Flash APIs Application Note AN2015 for more information.
10. The maximum total number of allowed erase/write cycles is the minimum $Flash_{ENPB}$ value multiplied by the number of flash blocks in the device.
11. Flash data retention based on the use condition of ≤ 7000 hours at T_A ≤ 125 °C and the remaining time at T_A ≤ 65 °C.

AC Electrical Characteristics

AC Chip-Level Specifications

Table 15 lists guaranteed maximum and minimum specifications for the voltage and temperature ranges: 4.75 V to 5.25 V and –40 °C ≤ T_A ≤ 125 °C. Typical parameters apply to 5 V at 25 °C and are for design guidance only.

Table 15. AC Chip-Level Specifications

Symbol	Description	Min	Typ	Max	Units	Notes
F_{IMO24}	IMO frequency for 24 MHz	22.8[12]	24	25.2[12]	MHz	Trimmed using factory trim values. See Figure 6 on page 13. SLIMO mode = 0.
F_{IMO6}	IMO frequency for 6 MHz	5.5[12]	6	6.5[12]	MHz	Trimmed using factory trim values. See Figure 6 on page 13. SLIMO mode = 1.
F_{CPU1}	CPU frequency (5 V V_{DD} nominal)	0.09[12]	12	12.6[12]	MHz	SLIMO mode = 0.
F_{BLK5}	Digital PSoC block frequency (5 V V_{DD} nominal)	0	24	25.2[12]	MHz	Refer to Table 18 on page 20.
F_{32K1}	ILO frequency	15	32	64	kHz	This specification applies when the ILO has been trimmed.
F_{32KU}	ILO untrimmed frequency	5	–	100	kHz	After a reset and before the M8C processor starts to execute, the ILO is not trimmed.
t_{XRST}	External reset pulse width	10	–	–	µs	
DC24M	24 MHz duty cycle	40	50	60	%	
DC_{ILO}	ILO duty cycle	20	50	80	%	
Step24M	24 MHz trim step size	–	50	–	kHz	
F_{MAX}	Maximum frequency of signal on row input or row output.	–	–	12.6[12]	MHz	
$SR_{POWERUP}$	Power supply slew rate	–	–	250	V/ms	V_{DD} slew rate during power up.
$t_{POWERUP}$	Time between end of POR state and CPU code execution	–	16	100	ms	Power-up from 0 V.
t_{JIT_IMO}[13]	24 MHz IMO cycle-to-cycle jitter (RMS)	–	200	700	ps	
	24 MHz IMO long term N cycle-to-cycle jitter (RMS)	–	300	900		N = 32
	24 MHz IMO period jitter (RMS)	–	100	400		

Notes

12. Accuracy derived from Internal Main Oscillator with appropriate trim for V_{DD} range.
13. Refer to Cypress Jitter Specifications document, Understanding Datasheet Jitter Specifications for Cypress Timing Products, for more information.

AC GPIO Specifications

Table 16 lists guaranteed maximum and minimum specifications for the voltage and temperature ranges: 4.75 V to 5.25 V and –40 °C ≤ T_A ≤ 125 °C. Typical parameters apply to 5 V at 25 °C and are for design guidance only.

Table 16. AC GPIO Specifications

Symbol	Description	Min	Typ	Max	Units	Notes
F_{GPIO}	GPIO operating frequency	0	–	12.6[14]	MHz	Normal Strong Mode
t_{RISEF}	Rise time, normal strong mode, Cload = 50 pF	2	–	22	ns	10% to 90%
t_{FALLF}	Fall time, normal strong mode, Cload = 50 pF	2	–	22	ns	10% to 90%
t_{RISES}	Rise time, slow strong mode, Cload = 50 pF	7	27	–	ns	10% to 90%
t_{FALLS}	Fall time, slow strong mode, Cload = 50 pF	7	22	–	ns	10% to 90%

Figure 7. GPIO Timing Diagram

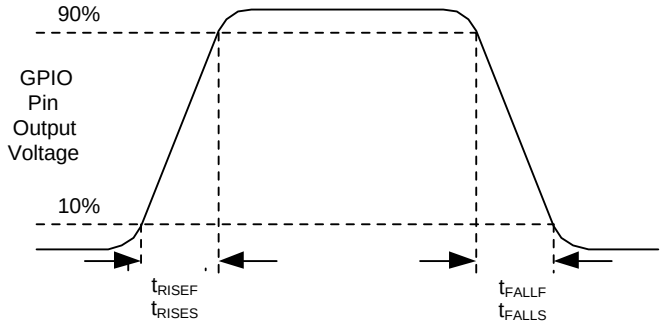

AC Operational Amplifier Specifications

Table 17 lists guaranteed maximum and minimum specifications for the voltage and temperature ranges: 4.75 V to 5.25 V and –40 °C ≤ T_A ≤ 125 °C. Typical parameters apply to 5 V at 25 °C and are for design guidance only.

Table 17. AC Operational Amplifier Specifications

Symbol	Description	Min	Typ	Max	Units	Notes
t_{COMP}	Comparator mode response time, 50 mV overdrive	–	–	150	ns	

Note
14. Accuracy derived from Internal Main Oscillator with appropriate trim for V_{DD} range.

Packaging Information

This section illustrates the packaging specifications for the automotive CY8C21x34 PSoC device, along with the thermal impedances for each package.

Important Note Emulation tools may require a larger area on the target PCB than the chip's footprint. For a detailed description of the emulation tools' dimensions, refer to the emulator pod drawings at http://www.cypress.com.

Figure 9. 20-Pin SSOP (210 Mils)

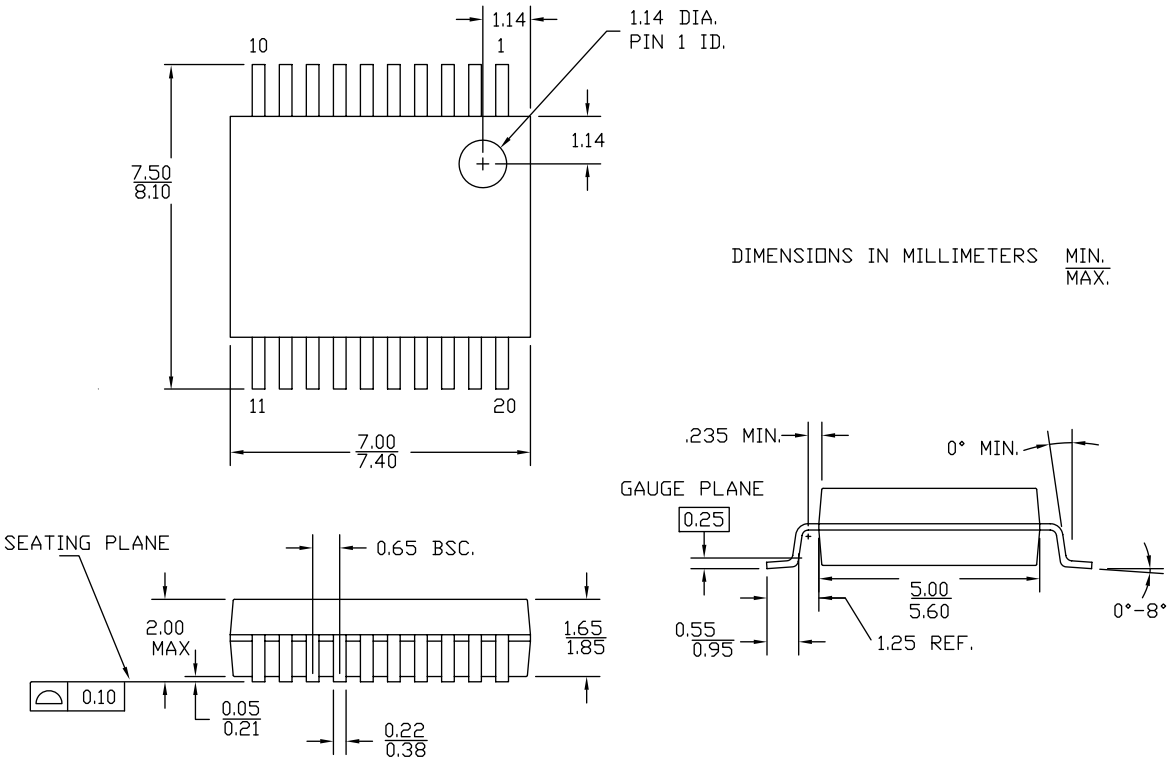

51-85077 *F

Figure 10. 28-Pin SSOP (210 Mils)

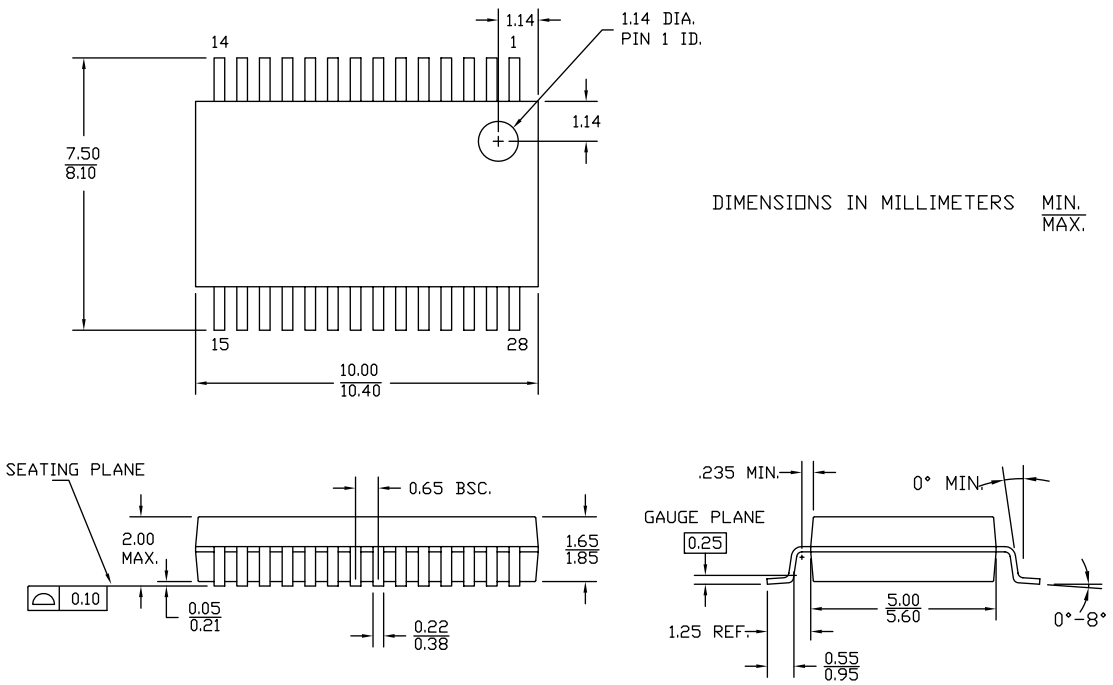

51-85079 *F

Thermal Impedances

Table 22. Thermal Impedances per Package

Package	Typical θ_{JA} [20]	Typical θ_{JC}
20-pin SSOP	117 °C/W	41 °C/W
28-pin SSOP	96 °C/W	39 °C/W

Solder Reflow Specifications

Table 23 shows the solder reflow temperature limits that must not be exceeded.

Table 23. Solder Reflow Specifications

Package	Maximum Peak Temperature (T_C)	Maximum Time above T_C – 5 °C
20-pin SSOP	260 °C	30 seconds
28-pin SSOP	260 °C	30 seconds

Note
20. $T_J = T_A$ + Power x θ_{JA}

Tape and Reel Information

Figure 11. 20-Pin SSOP Carrier Tape Drawing

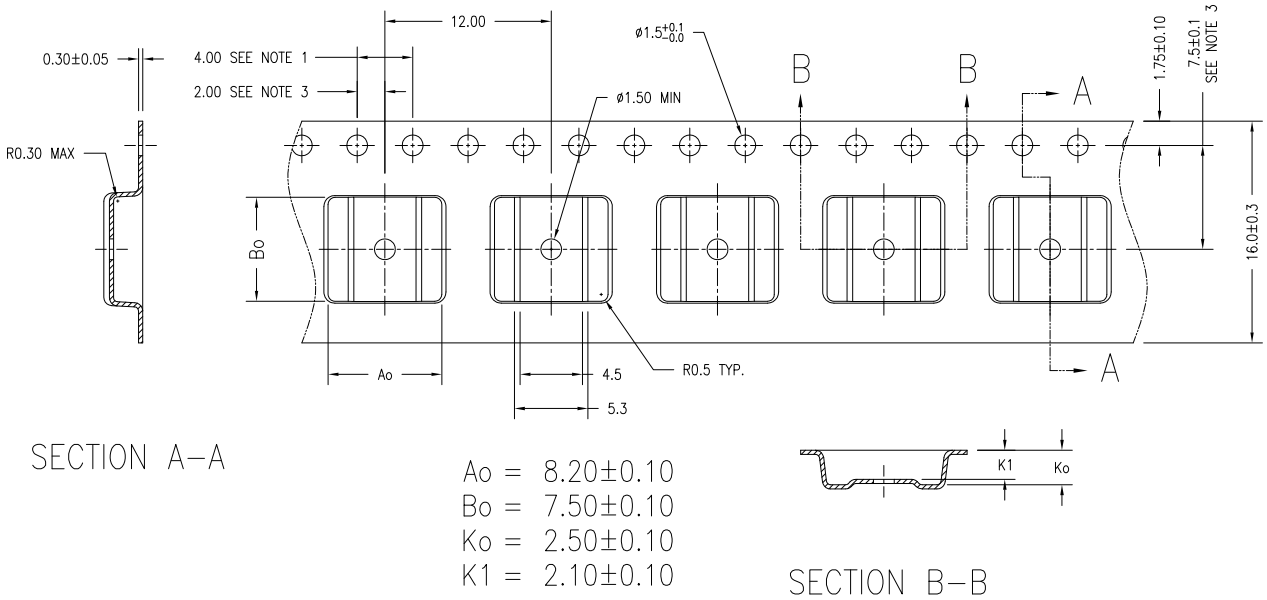

NOTES:
1. 10 SPROCKET HOLE PITCH CUMULATIVE TOLERANCE ±0.2
2. CAMBER IN COMPLIANCE WITH EIA 481
3. POCKET POSITION RELATIVE TO SPROCKET HOLE MEASURED AS TRUE POSITION OF POCKET, NOT POCKET HOLE

51-51101 *C

Figure 12. 28-Pin SSOP Carrier Tape Drawing

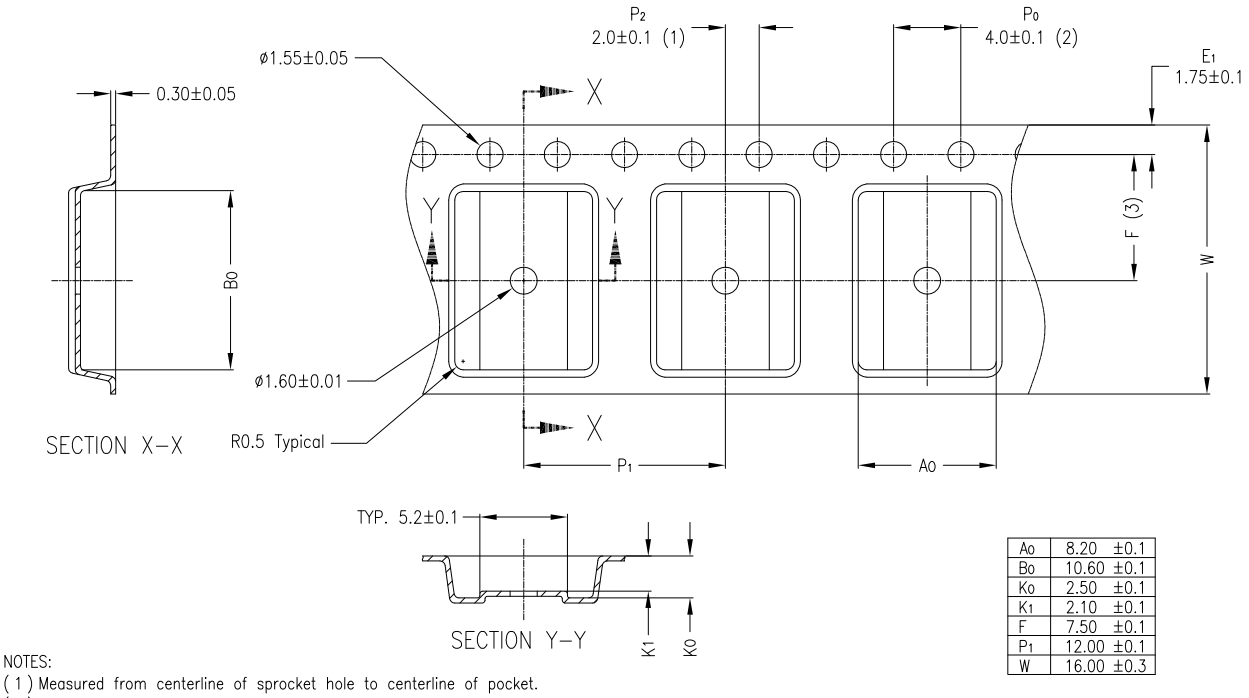

A0	8.20 ±0.1
B0	10.60 ±0.1
K0	2.50 ±0.1
K1	2.10 ±0.1
F	7.50 ±0.1
P1	12.00 ±0.1
W	16.00 ±0.3

NOTES:
(1) Measured from centerline of sprocket hole to centerline of pocket.
(2) Cumulative tolerance of 10 sprocket holes is ± 0.10.
(3) Measured from centerline of sprocket hole to centerline of pocket
4 Material: Conductive Polystyrene
5 Camber not to exceed 1mm in 100mm
6 Supplier P/N: SSOP28–3 CL3 22B3 Lxx W16

51-51100 *D

Table 24. Tape and Reel Specifications

Package	Cover Tape Width (mm)	Hub Size (inches)	Minimum Leading Empty Pockets	Minimum Trailing Empty Pockets	Standard Full Reel Quantity
20-pin SSOP	13.3	4	42	25	2000
28-pin SSOP	13.3	7	42	25	1000

Development Tool Selection

This section presents the development tools available for the automotive CY8C21x34 family.

Software

PSoC Designer

At the core of the PSoC development software suite is PSoC Designer. Utilized by thousands of PSoC developers, this robust software has been facilitating PSoC designs for years. PSoC Designer is available free of charge at http://www.cypress.com. PSoC Designer comes with a free C compiler.

PSoC Programmer

Flexible enough to be used on the bench in development, yet suitable for factory programming, PSoC Programmer works either as a standalone programming application or it can operate directly from PSoC Designer. PSoC Programmer software is compatible with both PSoC ICE-Cube in-circuit emulator and PSoC MiniProg. PSoC programmer is available free of charge at http://www.cypress.com.

Development Kits

All development kits can be purchased from the Cypress Online Store. The online store also has the most up to date information on kit contents, descriptions, and availability.

CY3215-DK Basic Development Kit

The CY3215-DK is for prototyping and development with PSoC Designer. This kit supports in-circuit emulation and the software interface allows users to run, halt, and single step the processor and view the contents of specific memory locations. Advanced emulation features are also supported through PSoC Designer. The kit includes:

- ICE-Cube Unit
- 28-Pin PDIP Emulation Pod for CY8C29466-24PXI
- 28-Pin CY8C29466-24PXI PDIP PSoC Device Samples (two)
- PSoC Designer Software CD
- ISSP Cable
- MiniEval Socket Programming and Evaluation board
- Backward Compatibility Cable (for connecting to legacy Pods)
- Universal 110/220 Power Supply (12 V)
- European Plug Adapter
- USB 2.0 Cable
- Getting Started Guide
- Development Kit Registration form

CY3280-BK1

The CY3280-BK1 Universal CapSense Control Kit is designed for easy prototyping and debug of CapSense designs with pre-defined control circuitry and plug-in hardware. The kit comes with a control boards for CY8C20x34 and CY8C21x34 devices as well as a breadboard module and a button(5)/slider module.

Evaluation Tools

All evaluation tools can be purchased from the Cypress Online Store. The online store also has the most up to date information on kit contents, descriptions, and availability.

CY3210-PSoCEval1

The CY3210-PSoCEval1 kit features an evaluation board and the MiniProg1 programming unit. The evaluation board includes an LCD module, potentiometer, LEDs, an RS-232 port, and plenty of breadboarding space to meet all of your evaluation needs. The kit includes:

- Evaluation Board with LCD Module
- MiniProg Programming Unit
- 28-Pin CY8C29466-24PXI PDIP PSoC Device Sample (2)
- PSoC Designer Software CD
- Getting Started Guide
- USB 2.0 Cable

CY3235-ProxDet

The CY3235-ProxDet CapSense Proximity Detection Demonstration Kit allows quick and easy demonstration of a PSoC CapSense-enabled device (CY8C21x34) to accurately sense the proximity of a hand or finger along the length of a wire antenna. The kit includes:

- Proximity Detection Demo Board w/Antenna
- I2C to USB Debugging/Communication Bridge
- USB Cable (6 feet)
- Supporting Software CD
- CY3235-ProxDet Quick Start Guide
- 1 CY8C24894 PSoC device on I2C-USB Bridge
- 1 CY8C21434 PSoC device on Proximity Detection Demo Board

CY3210-21X34 Evaluation Pod (EvalPod)

PSoC EvalPods are pods that connect to the ICE In-Circuit Emulator (CY3215-DK kit) to allow debugging capability. They can also function as a standalone device without debugging capability. The EvalPod has a 28-pin DIP footprint on the bottom for easy connection to development kits or other hardware. The top of the EvalPod has prototyping headers for easy connection to the device's pins. CY3210-21X34 provides evaluation of the CY8C21x34 PSoC device family.

Device Programmers

All device programmers can be purchased from the Cypress Online Store. The online store also has the most up to date information on kit contents, descriptions, and availability.

CY3210-MiniProg1

The CY3210-MiniProg1 kit allows a user to program PSoC devices via the MiniProg1 programming unit. The MiniProg is a small, compact prototyping programmer that connects to the PC via a provided USB 2.0 cable. The kit includes:

- MiniProg Programming Unit
- MiniEval Socket Programming and Evaluation Board
- 28-Pin CY8C29466-24PXI PDIP PSoC Device Sample
- PSoC Designer Software CD
- Getting Started Guide
- USB 2.0 Cable

CY3207ISSP In-System Serial Programmer (ISSP)

The CY3207ISSP is a production programmer. It includes protection circuitry and an industrial case that is more robust than the MiniProg in a production-programming environment.

Note: CY3207ISSP needs special software and is not compatible with PSoC Programmer. This software is free and can be downloaded from http://www.cypress.com. The kit includes:

- CY3207 Programmer Unit
- PSoC ISSP Software CD
- 110 ~ 240 V Power Supply, Euro-Plug Adapter
- USB 2.0 Cable

Accessories (Emulation and Programming)

Table 25. Emulation and Programming Accessories

Part Number	Pin Package	Pod Kit[21]	Foot Kit[22]	Adapter[23]
CY8C21334-12PVXE	20-pin SSOP	CY3250-21X34	CY3250-20SSOP-FK	Adapters can be found at http://www.emulation.com.
CY8C21534-12PVXE	28-pin SSOP	CY3250-21X34	CY3250-28SSOP-FK	

Notes

21. Pod kit contains an emulation pod, a flex-cable (connects the pod to the ICE), two feet, and device samples.
22. Foot kit includes surface mount feet that can be soldered to the target PCB.
23. Programming adapter converts non-DIP package to DIP footprint. Specific details and ordering information for each of the adapters can be found at http://www.emulation.com.

Ordering Information

The following table lists the automotive CY8C21x34 PSoC device's key package features and ordering codes.

Table 26. PSoC Device Key Features and Ordering Information

Package	Ordering Code	Flash (Bytes)	SRAM (Bytes)	Temperature Range	Digital Blocks	Analog Blocks	Digital I/O Pins	Analog Inputs	Analog Outputs	XRES Pin
20-pin (210-Mil) SSOP	CY8C21334-12PVXE	8 K	512	–40 °C to +125 °C	4	4	16	16	0	Yes
20-pin (210-Mil) SSOP (tape and reel)	CY8C21334-12PVXET	8 K	512	–40 °C to +125 °C	4	4	16	16	0	Yes
28-pin (210-Mil) SSOP	CY8C21534-12PVXE	8 K	512	–40 °C to +125 °C	4	4	24	24	0	Yes
28-pin (210-Mil) SSOP (tape and reel)	CY8C21534-12PVXET	8 K	512	–40 °C to +125 °C	4	4	24	24	0	Yes

Ordering Code Definitions

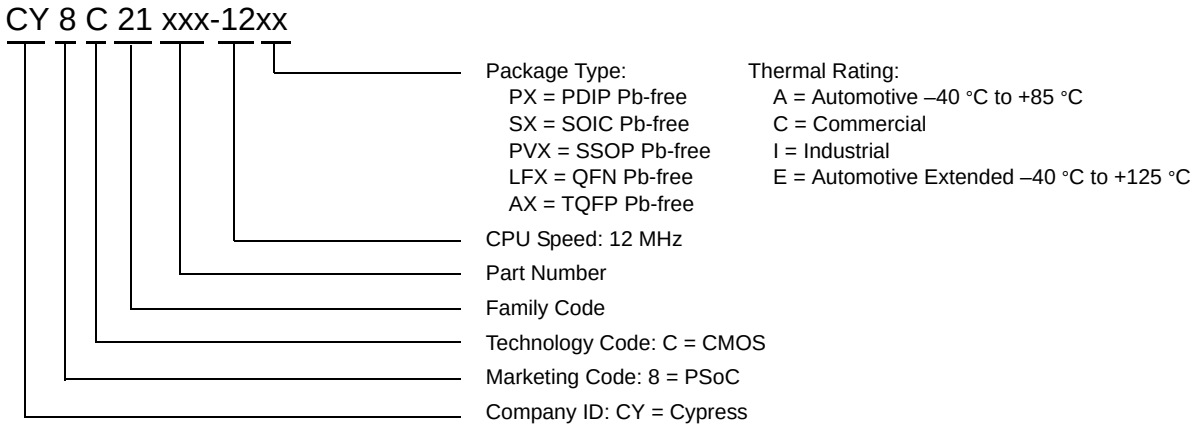

Acronyms

The following table lists the acronyms that are used in this document.

Acronym	Description	Acronym	Description
AC	alternating current	MCU	microcontroller unit
ADC	analog-to-digital converter	MIPS	million instructions per second
API	application programming interface	PLL	phase-locked loop
AEC	Automotive Electronics Council	PDIP	plastic dual in-line package
CPU	central processing unit	POR	power-on reset
CT	continuous time	PPOR	precision POR
CRC	cyclic redundancy check	PCB	printed circuit board
DAC	digital-to-analog converter	PSoC®	Programmable System-on-Chip
DC	direct current or duty cycle	PRS	pseudo-random sequence
EEPROM	electrically erasable programmable read-only memory	PWM	pulse-width modulator
EXTCLK	external clock	SCL / SCLK	serial clock
XRES	external reset	SDA	serial data
GPIO	general-purpose I/O	SPI	serial peripheral interface
ICE	in-circuit emulator	SSOP	shrink small-outline package
IrDA	Infrared Data Association	SLIMO	slow IMO
I/O	input/output	SOIC	small-outline integrated circuit
ISSP	in-system serial programming	SRAM	static random-access memory
IDE	integrated development environment	SROM	supervisory read-only memory
I2C	Inter-Integrated Circuit	SMP	switch mode pump
ILO	internal low-speed oscillator	SC	switched capacitor
IMO	internal main oscillator	TQFP	thin quad flat pack
LED	light-emitting diode	UART	universal asynchronous receiver transmitter
LCD	liquid crystal display	USB	universal serial bus
LVD	low voltage detect	WDT	watchdog timer

Reference Documents

CY8CPLC20, CY8CLED16P01, CY8C29x66, CY8C27x43, CY8C24x94, CY8C24x23, CY8C24x23A, CY8C22x13, CY8C21x34, CY8C21x23, CY7C64215, CY7C603xx, CY8CNP1xx, and CYWUSB6953 PSoC® Programmable System-on-Chip Technical Reference Manual (TRM) (001-14463)

Design Aids – Reading and Writing PSoC® Flash – AN2015 (001-40459)

Understanding Datasheet Jitter Specifications for Cypress Timing Products

Glossary (continued)

block	1. A functional unit that performs a single function, such as an oscillator. 2. A functional unit that may be configured to perform one of several functions, such as a digital PSoC block or an analog PSoC block.
buffer	1. A storage area for data that is used to compensate for a speed difference, when transferring data from one device to another. Usually refers to an area reserved for I/O operations, into which data is read, or from which data is written. 2. A portion of memory set aside to store data, often before it is sent to an external device or as it is received from an external device. 3. An amplifier used to lower the output impedance of a system.
bus	1. A named connection of nets. Bundling nets together in a bus makes it easier to route nets with similar routing patterns. 2. A set of signals performing a common function and carrying similar data. Typically represented using vector notation; for example, address[7:0]. 3. One or more conductors that serve as a common connection for a group of related devices.
clock	The device that generates a periodic signal with a fixed frequency and duty cycle. A clock is sometimes used to synchronize different logic blocks.
comparator	An electronic circuit that produces an output voltage or current whenever two input levels simultaneously satisfy predetermined amplitude requirements.
compiler	A program that translates a high level language, such as C, into machine language.
configuration space	In PSoC devices, the register space accessed when the XIO bit, in the CPU_F register, is set to ‘1’.
crystal oscillator	An oscillator in which the frequency is controlled by a piezoelectric crystal. Typically a piezoelectric crystal is less sensitive to ambient temperature than other circuit components.
cyclic redundancy check (CRC)	A calculation used to detect errors in data communications, typically performed using a linear feedback shift register. Similar calculations may be used for a variety of other purposes such as data compression.
data bus	A bi-directional set of signals used by a computer to convey information from a memory location to the central processing unit and vice versa. More generally, a set of signals used to convey data between digital functions.
debugger	A hardware and software system that allows you to analyze the operation of the system under development. A debugger usually allows the developer to step through the firmware one step at a time, set break points, and analyze memory.
dead band	A period of time when neither of two or more signals are in their active state or in transition.
digital blocks	The 8-bit logic blocks that can act as a counter, timer, serial receiver, serial transmitter, CRC generator, pseudo-random number generator, or SPI.
digital-to-analog converter (DAC)	A device that changes a digital signal to an analog signal of corresponding magnitude. The analog-to-digital converter (ADC) performs the reverse operation.
duty cycle	The relationship of a clock period high time to its low time, expressed as a percent.
emulator	Duplicates (provides an emulation of) the functions of one system with a different system, so that the second system appears to behave like the first system.

Glossary (continued)

external reset (XRES)	An active high signal that is driven into the PSoC device. It causes all operation of the CPU and blocks to stop and return to a pre-defined state.
flash	An electrically programmable and erasable, non-volatile technology that provides you the programmability and data storage of EPROMs, plus in-system erasability. Non-volatile means that the data is retained when power is off.
flash block	The smallest amount of flash ROM space that may be programmed at one time and the smallest amount of flash space that may be protected.
frequency	The number of cycles or events per unit of time, for a periodic function.
gain	The ratio of output current, voltage, or power to input current, voltage, or power, respectively. Gain is usually expressed in dB.
I^2C	A two-wire serial computer bus by Phillips Semiconductors (now NXP Semiconductors). It is used to connect low-speed peripherals in an embedded system. The original system was created in the early 1980s as a battery control interface, but it was later used as a simple internal bus system for building control electronics. I2C uses only two bi-directional pins, clock and data, both running at the V_{DD} supply voltage and pulled high with resistors. The bus operates up to100 kbits/second in standard mode and 400 kbits/second in fast mode.
ICE	The in-circuit emulator that allows you to test the project in a hardware environment, while viewing the debugging device activity in a software environment (PSoC Designer).
input/output (I/O)	A device that introduces data into or extracts data from a system.
interrupt	A suspension of a process, such as the execution of a computer program, caused by an event external to that process, and performed in such a way that the process can be resumed.
interrupt service routine (ISR)	A block of code that normal code execution is diverted to when the CPU receives a hardware interrupt. Many interrupt sources may each exist with its own priority and individual ISR code block. Each ISR code block ends with the RETI instruction, returning the device to the point in the program where it left normal program execution.
jitter	1. A misplacement of the timing of a transition from its ideal position. A typical form of corruption that occurs on serial data streams. 2. The abrupt and unwanted variations of one or more signal characteristics, such as the interval between successive pulses, the amplitude of successive cycles, or the frequency or phase of successive cycles.
low voltage detect (LVD)	A circuit that senses V_{DD} and provides an interrupt to the system when V_{DD} falls below a selected threshold.
M8C	An 8-bit Harvard-architecture microprocessor. The microprocessor coordinates all activity inside a PSoC by interfacing to the flash, SRAM, and register space.
master device	A device that controls the timing for data exchanges between two devices. Or when devices are cascaded in width, the master device is the one that controls the timing for data exchanges between the cascaded devices and an external interface. The controlled device is called the *slave device*.
microcontroller	An integrated circuit chip that is designed primarily for control systems and products. In addition to a CPU, a microcontroller typically includes memory, timing circuits, and I/O circuitry. The reason for this is to permit the realization of a controller with a minimal quantity of chips, thus achieving maximal possible miniaturization. This in turn, reduces the volume and the cost of the controller. The microcontroller is normally not used for general-purpose computation as is a microprocessor.
mixed-signal	The reference to a circuit containing both analog and digital techniques and components.