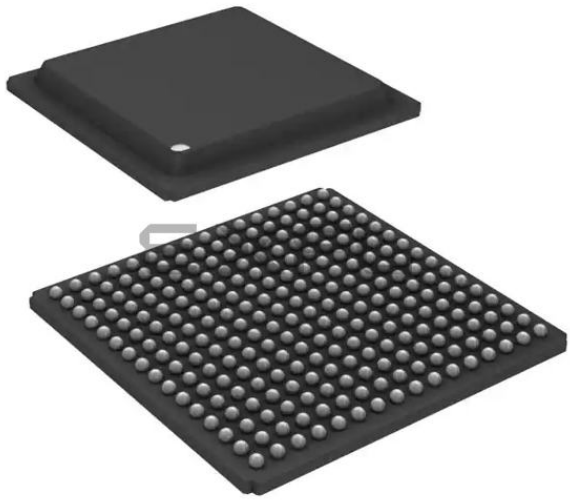

Welcome to E-XFL.COM

Understanding Embedded - Microprocessors

Embedded microprocessors are specialized computing chips designed to perform specific tasks within an embedded system. Unlike general-purpose microprocessors found in personal computers, embedded microprocessors are tailored for dedicated functions within larger systems, offering optimized performance, efficiency, and reliability. These microprocessors are integral to the operation of countless electronic devices, providing the computational power necessary for controlling processes, handling data, and managing communications.

Applications of Embedded - Microprocessors

Embedded microprocessors are utilized across a broad spectrum of applications, making them indispensable in

Details	
Product Status	Obsolete
Core Processor	MPC8xx
Number of Cores/Bus Width	1 Core, 32-Bit
Speed	66MHz
Co-Processors/DSP	Communications; CPM
RAM Controllers	DRAM
Graphics Acceleration	No
Display & Interface Controllers	-
Ethernet	10/100Mbps (2)
SATA	-
USB	USB 2.0 (1)
Voltage - I/O	3.3V
Operating Temperature	-40°C ~ 100°C (TA)
Security Features	-
Package / Case	256-BBGA
Supplier Device Package	256-PBGA (23x23)
Purchase URL	https://www.e-xfl.com/product-detail/nxp-semiconductors/mpc870czt66

1 Overview

The MPC875/MPC870 is a versatile single-chip integrated microprocessor and peripheral combination that can be used in a variety of controller applications and communications and networking systems. The MPC875/MPC870 provides enhanced ATM functionality over that of other ATM-enabled members of the MPC860 family.

Table 1 shows the functionality supported by the MPC875/MPC870.

Table 1. MPC875/MPC870 Devices

Part	Cache (Kbytes)		Ethernet		SCC	SMC	USB	Security Engine
	I Cache	D Cache	10BaseT	10/100				
MPC875	8	8	1	2	1	1	1	Yes
MPC870	8	8	—	2	—	1	1	No

2 Features

The MPC875/MPC870 is comprised of three modules that each use the 32-bit internal bus: a MPC8xx core, a system integration unit (SIU), and a communications processor module (CPM).

The following list summarizes the key MPC875/MPC870 features:

- Embedded MPC8xx core up to 133 MHz
- Maximum frequency operation of the external bus is 80 MHz (in 1:1 mode)
  - The 133-MHz core frequency supports 2:1 mode only
  - The 66-/80-MHz core frequencies support both the 1:1 and 2:1 modes
- Single-issue, 32-bit core (compatible with the Power Architecture definition) with thirty-two 32-bit general-purpose registers (GPRs)
  - The core performs branch prediction with conditional prefetch and without conditional execution
  - 8-Kbyte data cache and 8-Kbyte instruction cache (see Table 1)
    - Instruction cache is two-way, set-associative with 256 sets in 2 blocks
    - Data cache is two-way, set-associative with 256 sets
    - Cache coherency for both instruction and data caches is maintained on 128-bit (4-word) cache blocks
    - Caches are physically addressed, implement a least recently used (LRU) replacement algorithm, and are lockable on a cache block basis
  - MMUs with 32-entry TLB, fully associative instruction and data TLBs
  - MMUs support multiple page sizes of 4, 16, and 512 Kbytes, and 8 Mbytes; 16 virtual address spaces and 16 protection groups
  - Advanced on-chip emulation debug mode
- Up to 32-bit data bus (dynamic bus sizing for 8, 16, and 32 bits)

- Thirty-two address lines
- Memory controller (eight banks)
  - Contains complete dynamic RAM (DRAM) controller
  - Each bank can be a chip select or $\overline{\text{RAS}}$ to support a DRAM bank
  - Up to 30 wait states programmable per memory bank
  - Glueless interface to DRAM, SIMMS, SRAM, EPROMs, Flash EPROMs, and other memory devices
  - DRAM controller programmable to support most size and speed memory interfaces
  - Four $\overline{\text{CAS}}$ lines, four $\overline{\text{WE}}$ lines, and one $\overline{\text{OE}}$ line
  - Boot chip-select available at reset (options for 8-, 16-, or 32-bit memory)
  - Variable block sizes (32 Kbytes–256 Mbytes)
  - Selectable write protection
  - On-chip bus arbitration logic
- General-purpose timers
  - Four 16-bit timers or two 32-bit timers
  - Gate mode can enable/disable counting
  - Interrupt can be masked on reference match and event capture
- Two Fast Ethernet controllers (FEC)—Two 10/100 Mbps Ethernet/IEEE Std. 802.3® CDMA/CS that interface through MII and/or RMII interfaces
- System integration unit (SIU)
  - Bus monitor
  - Software watchdog
  - Periodic interrupt timer (PIT)
  - Clock synthesizer
  - Decrementer and time base
  - Reset controller
  - IEEE 1149.1™ Std. test access port (JTAG)
- Security engine is optimized to handle all the algorithms associated with IPsec, SSL/TLS, SRTP, IEEE 802.11i® standard, and iSCSI processing. Available on the MPC875, the security engine contains a crypto-channel, a controller, and a set of crypto hardware accelerators (CHAs). The CHAs are:
  - Data encryption standard execution unit (DEU)
    - DES, 3DES
    - Two key (K1, K2, K1) or three key (K1, K2, K3)
    - ECB and CBC modes for both DES and 3DES
  - Advanced encryption standard unit (AESU)
    - Implements the Rijndael symmetric key cipher

5 Power Dissipation

Table 5 provides information on power dissipation. The modes are 1:1, where CPU and bus speeds are equal, and 2:1, where CPU frequency is twice bus speed.

Table 5. Power Dissipation (P_D)

Die Revision	Bus Mode	Frequency	Typical [1]	Maximum [2]	Unit
0	1:1	66 MHz	310	390	mW
		80 MHz	350	430	mW
	2:1	133 MHz	430	495	mW

[1] Typical power dissipation is measured at $V_{DDL} = V_{DDSYN} = 1.8$ V, and V_{DDH} is at 3.3 V.
[2] Maximum power dissipation at $V_{DDL} = V_{DDSYN} = 1.9$ V, and V_{DDH} is at 3.5 V.

NOTE

The values in Table 5 represent V_{DDL}-based power dissipation and do not include I/O power dissipation over V_{DDH}. I/O power dissipation varies widely by application due to buffer current, depending on external circuitry.

The V_{DDSYN} power dissipation is negligible.

6 DC Characteristics

Table 6 provides the DC electrical characteristics for the MPC875/MPC870.

Table 6. DC Electrical Specifications

Characteristic	Symbol	Min	Max	Unit
Operating voltage	V_{DDH} (I/O)	3.135	3.465	V
	V_{DDL} (core)	1.7	1.9	V
	V_{DDSYN}[1]	1.7	1.9	V
	Difference between V_{DDL} and V_{DDSYN}	—	100	mV
Input high voltage (all inputs except EXTAL and EXTCLK)[2]	V_{IH}	2.0	3.465	V
Input low voltage[3]	V_{IL}	GND	0.8	V
EXTAL, EXTCLK input high voltage	V_{IHC}	$0.7 \times V_{DDH}$	V_{DDH}	V
Input leakage current, $V_{in} = 5.5$ V (except TMS, $\overline{TRST}$, DSCK, and DSDI pins) for 5-V tolerant pins[1]	I_{in}	—	100	µA
Input leakage current, $V_{in} = V_{DDH}$ (except TMS, $\overline{TRST}$, DSCK, and DSDI)	I_{In}	—	10	µA
Input leakage current, $V_{in} = 0$ V (except TMS, $\overline{TRST}$, DSCK, and DSDI pins)	I_{In}	—	10	µA
Input capacitance[4]	C_{in}	—	20	pF

Table 6. DC Electrical Specifications (continued)

Characteristic	Symbol	Min	Max	Unit
Output high voltage, I_{OH} = –2.0 mA, V_{DDH} = 3.0 V (except XTAL and open-drain pins)	V_{OH}	2.4	—	V
Output low voltage I_{OL} = 2.0 mA (CLKOUT) I_{OL} = 3.2 mA[5] I_{OL} = 5.3 mA[6] I_{OL} = 7.0 mA (TXD1/PA14, TXD2/PA12) I_{OL} = 8.9 mA ($\overline{TS}$, $\overline{TA}$, $\overline{TEA}$, $\overline{BI}$, $\overline{BB}$, $\overline{HRESET}$, $\overline{SRESET}$)	V_{OL}	—	0.5	V

1 The difference between V_{DDL} and V_{DDSYN} cannot be more than 100 mV.
2 The signals PA[0:15], PB[14:31], PC[4:15], PD[3:15], PE(14:31), TDI, TDO, TCK, $\overline{TRST}$, TMS, MII1_TXEN, and MII_MDIO are 5-V tolerant. The minimum voltage is still 2.0 V.
3 V_{IL}(max) for the I^2C interface is 0.8 V rather than the 1.5 V as specified in the I^2C standard.
4 Input capacitance is periodically sampled.
5 A(0:31), TSIZ0/$\overline{REG}$, TSIZ1, D(0:31), $\overline{IRQ}$(2:4), $\overline{IRQ6}$, RD/$\overline{WR}$, $\overline{BURST}$, IP_B(0:1), PA(0:4), PA(6:7), PA(10:11), PA15, PB19, PB(23:31), PC(6:7), PC(10:13), PC15, PD8, PE(14:31), MII1_CRS, MII_MDIO, MII1_TXEN, and MII1_COL.
6 $\overline{BDIP}$/$\overline{GPL_B}$(5), $\overline{BR}$, $\overline{BG}$, FRZ/$\overline{IRQ6}$, $\overline{CS}$(0:7), $\overline{WE}$(0:3), $\overline{BS_A}$(0:3), $\overline{GPL_A0}$/$\overline{GPL_B0}$, $\overline{OE}$/$\overline{GPL_A1}$/$\overline{GPL_B1}$, $\overline{GPL_A}$(2:3)/$\overline{GPL_B}$(2:3)/$\overline{CS}$(2:3), UPWAITA/$\overline{GPL_A4}$, UPWAITB/$\overline{GPL_B4}$, $\overline{GPL_A5}$, ALE_A, $\overline{CE1_A}$, $\overline{CE2_A}$, OP(0:3), and BADDR(28:30).

7 Thermal Calculation and Measurement

For the following discussions, $P_D = (V_{DDL} \times I_{DDL}) + P_{I/O}$, where $P_{I/O}$ is the power dissipation of the I/O drivers.

NOTE

The V_{DDSYN} power dissipation is negligible.

7.1 Estimation with Junction-to-Ambient Thermal Resistance

An estimation of the chip junction temperature, T_J, in °C can be obtained from the following equation:

$$T_J = T_A + (R_{\theta JA} \times P_D)$$

where:

T_A = ambient temperature (°C)
$R_{\theta JA}$ = package junction-to-ambient thermal resistance (°C/W)
P_D = power dissipation in package

The junction-to-ambient thermal resistance is an industry standard value that provides a quick and easy estimation of thermal performance. However, the answer is only an estimate; test cases have demonstrated that errors of a factor of two (in the quantity $T_J – T_A$) are possible.

7.5 Experimental Determination

To determine the junction temperature of the device in the application after prototypes are available, the thermal characterization parameter (Ψ_{JT}) can be used to determine the junction temperature with a measurement of the temperature at the top center of the package case using the following equation:

$$T_J = T_T + (\Psi_{JT} \times P_D)$$

where:

Ψ_{JT} = thermal characterization parameter

T_T = thermocouple temperature on top of package

P_D = power dissipation in package

The thermal characterization parameter is measured per the JESD51-2 specification published by JEDEC using a 40 gauge type T thermocouple epoxied to the top center of the package case. The thermocouple should be positioned so that the thermocouple junction rests on the package. A small amount of epoxy is placed over the thermocouple junction and over about 1 mm of wire extending from the junction. The thermocouple wire is placed flat against the package case to avoid measurement errors caused by the cooling effects of the thermocouple wire.

7.6 References

Semiconductor Equipment and Materials International 805 East Middlefield Rd Mountain View, CA 94043	(415) 964-5111
MIL-SPEC and EIA/JESD (JEDEC) specifications (Available from Global Engineering Documents)	800-854-7179 or 303-397-7956
JEDEC Specifications	http://www.jedec.org

1. C.E. Triplett and B. Joiner, “An Experimental Characterization of a 272 PBGA Within an Automotive Engine Controller Module,” Proceedings of SemiTherm, San Diego, 1998, pp. 47–54.
2. 2. B. Joiner and V. Adams, “Measurement and Simulation of Junction to Board Thermal Resistance and Its Application in Thermal Modeling,” Proceedings of SemiTherm, San Diego, 1999, pp. 212–220.

8 Power Supply and Power Sequencing

This section provides design considerations for the MPC875/MPC870 power supply. The MPC875/MPC870 has a core voltage (V_{DDL}) and PLL voltage (V_{DDSYN}), which both operate at a lower voltage than the I/O voltage (V_{DDH}). The I/O section of the MPC875/MPC870 is supplied with 3.3 V across V_{DDH} and V_{SS} (GND).

The signals PA[0:3], PA[8:11], PB15, PB[24:25], PB[28:31], PC[4:7], PC[12:13], PC15, PD[3:15], TDI, TDO, TCK, $\overline{\text{TRST}}$, TMS, MII_TXEN, and MII_MDIO are 5 V tolerant. No input can be more than 2.5 V greater than V_{DDH}. In addition, 5-V tolerant pins cannot exceed 5.5 V, and remaining input pins cannot exceed 3.465 V. This restriction applies to power up, power down, and normal operation.

One consequence of multiple power supplies is that when power is initially applied, the voltage rails ramp up at different rates. The rates depend on the nature of the power supply, the type of load on each power supply, and the manner in which different voltages are derived. The following restrictions apply:

- V_{DDL} must not exceed V_{DDH} during power up and power down
- V_{DDL} must not exceed 1.9 V, and V_{DDH} must not exceed 3.465 V

These cautions are necessary for the long-term reliability of the part. If they are violated, the electrostatic discharge (ESD) protection diodes are forward-biased, and excessive current can flow through these diodes. If the system power supply design does not control the voltage sequencing, the circuit shown in Figure 4 can be added to meet these requirements. The MUR420 Schottky diodes control the maximum potential difference between the external bus and core power supplies on power up, and the 1N5820 diodes regulate the maximum potential difference on power down.

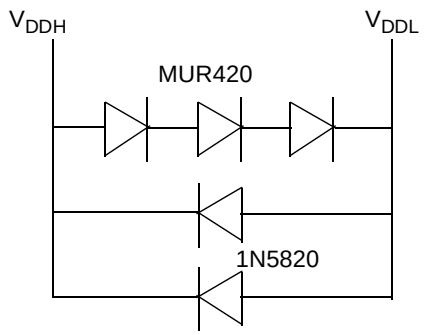

Figure 4. Example Voltage Sequencing Circuit

9 Mandatory Reset Configurations

The MPC875/MPC870 requires a mandatory configuration during reset.

If hardware reset configuration word (HRCW) is enabled, the HRCW[DBGC] value needs to be set to binary X1 in the HRCW and the SIUMCR[DBGC] should be programmed with the same value in the boot code after reset. This can be done by asserting the $\overline{\text{RSTCONF}}$ during $\overline{\text{HRESET}}$ assertion.

If HRCW is disabled, the SIUMCR[DBGC] should be programmed with binary X1 in the boot code after reset by negating the $\overline{\text{RSTCONF}}$ during the $\overline{\text{HRESET}}$ assertion.

The MBMR[GPLB4DIS], PAPAR, PADIR, PBPAR, PBDIR, PCPAR, and PCDIR need to be configured with the mandatory values in Table 7 in the boot code after the reset is negated.

Table 7. Mandatory Reset Configuration of MPC875/MPC870

Register/Configuration	Field	Value (Binary)
HRCW (Hardware reset configuration word)	HRCW[DBGC]	X1
SIUMCR (SIU module configuration register)	SIUMCR[DBGC]	X1
MBMR (Machine B mode register)	MBMR[GPLB4DIS}	0
PAPAR (Port A pin assignment register)	PAPAR[5:9] PAPAR[12:13]	0

Table 10. Bus Operation Timings (continued)

Num	Characteristic	33 MHz		40 MHz		66 MHz		80 MHz		Unit
		Min	Max	Min	Max	Min	Max	Min	Max	
B25	CLKOUT rising edge to $\overline{OE}$, $\overline{WE}$(0:3)/BS_B[0:3] asserted (MAX = 0.00 × B1 + 9.00)	—	9.00		9.00		9.00	—	9.00	ns
B26	CLKOUT rising edge to $\overline{OE}$ negated (MAX = 0.00 × B1 + 9.00)	2.00	9.00	2.00	9.00	2.00	9.00	2.00	9.00	ns
B27	A(0:31) and BADDR(28:30) to $\overline{CS}$ asserted GPCM ACS = 10, TRLX = 1 (MIN = 1.25 × B1 – 2.00)	35.90	—	29.30	—	16.90	—	13.60	—	ns
B27a	A(0:31) and BADDR(28:30) to $\overline{CS}$ asserted GPCM ACS = 11, TRLX = 1 (MIN = 1.50 × B1 – 2.00)	43.50	—	35.50	—	20.70	—	16.75	—	ns
B28	CLKOUT rising edge to $\overline{WE}$(0:3)/BS_B[0:3] negated GPCM write access CSNT = 0 (MAX = 0.00 × B1 + 9.00)	—	9.00	—	9.00	—	9.00	—	9.00	ns
B28a	CLKOUT falling edge to $\overline{WE}$(0:3)/BS_B[0:3] negated GPCM write access TRLX = 0, CSNT = 1, EBDF = 0 (MAX = 0.25 × B1 + 6.80)	7.60	14.30	6.30	13.00	3.80	10.50	3.13	9.93	ns
B28b	CLKOUT falling edge to $\overline{CS}$ negated GPCM write access TRLX = 0, CSNT = 1 ACS = 10 or ACS = 11, EBDF = 0 (MAX = 0.25 × B1 + 6.80)	—	14.30	—	13.00	—	10.50	—	9.93	ns
B28c	CLKOUT falling edge to $\overline{WE}$(0:3)/BS_B[0:3] negated GPCM write access TRLX = 0, CSNT = 1 write access TRLX = 0, CSNT = 1, EBDF = 1 (MAX = 0.375 × B1 + 6.6)	10.90	18.00	10.90	18.00	5.20	12.30	4.69	11.29	ns
B28d	CLKOUT falling edge to $\overline{CS}$ negated GPCM write access TRLX = 0, CSNT = 1, ACS = 10 or ACS = 11, EBDF = 1 (MAX = 0.375 × B1 + 6.6)	—	18.00	—	18.00	—	12.30	—	11.30	ns
B29	$\overline{WE}$(0:3)/BS_B[0:3] negated to D(0:31) High-Z GPCM write access, CSNT = 0, EBDF = 0 (MIN = 0.25 × B1 – 2.00)	5.60	—	4.30	—	1.80	—	1.13	—	ns
B29a	$\overline{WE}$(0:3)/BS_B[0:3] negated to D(0:31) High-Z GPCM write access, TRLX = 0, CSNT = 1, EBDF = 0 (MIN = 0.50 × B1 – 2.00)	13.20	—	10.50	—	5.60	—	4.25	—	ns
B29b	$\overline{CS}$ negated to D(0:31) High-Z GPCM write access, ACS = 00, TRLX = 0 and CSNT = 0 (MIN = 0.25 × B1 – 2.00)	5.60	—	4.30	—	1.80	—	1.13	—	ns
B29c	$\overline{CS}$ negated to D(0:31) High-Z GPCM write access, TRLX = 0, CSNT = 1, ACS = 10 or ACS = 11, EBDF = 0 (MIN = 0.50 × B1 – 2.00)	13.20	—	10.50	—	5.60	—	4.25	—	ns

Figure 7 provides the timing for the synchronous output signals.

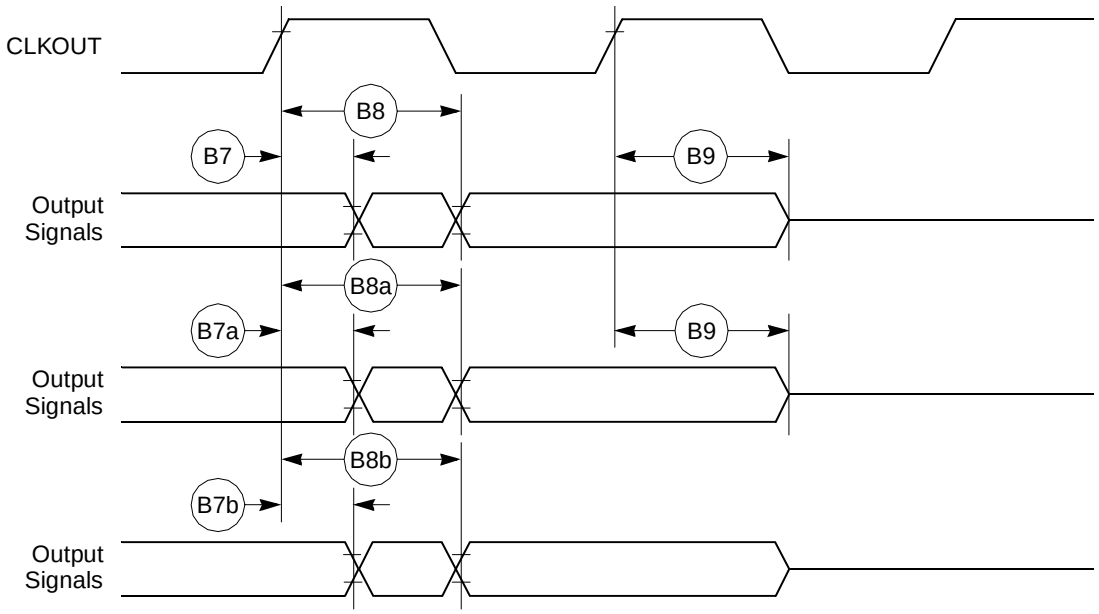

Figure 7. Synchronous Output Signals Timing

Figure 8 provides the timing for the synchronous active pull-up and open-drain output signals.

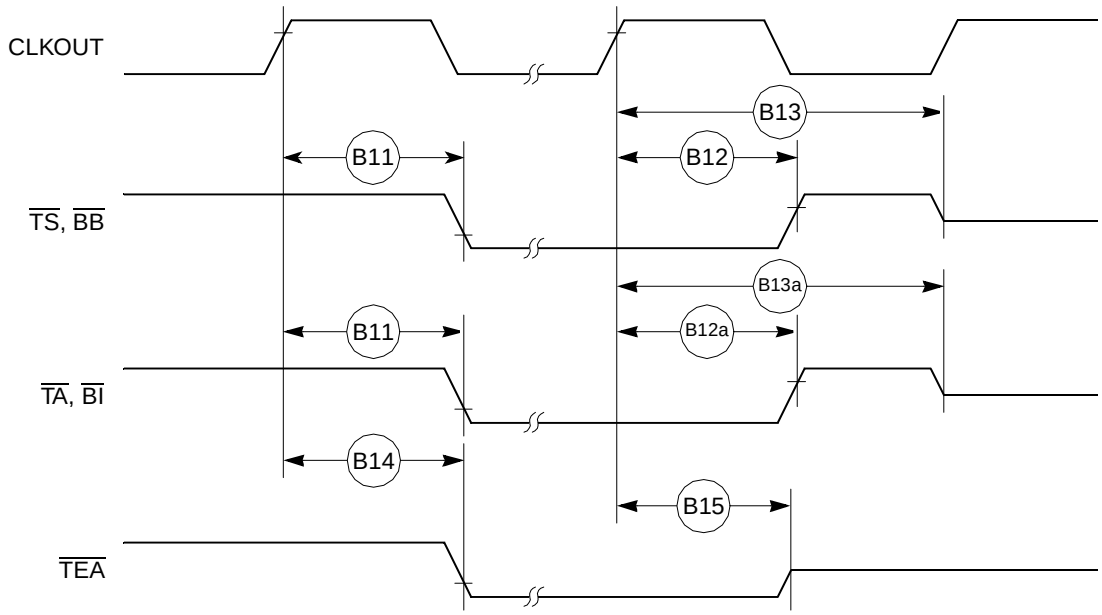

Figure 8. Synchronous Active Pull-Up Resistor and Open-Drain Outputs Signals Timing

Figure 11 provides the timing for the input data controlled by the UPM for data beats where DLT3 = 1 in the UPM RAM words. (This is only the case where data is latched on the falling edge of CLKOUT.)

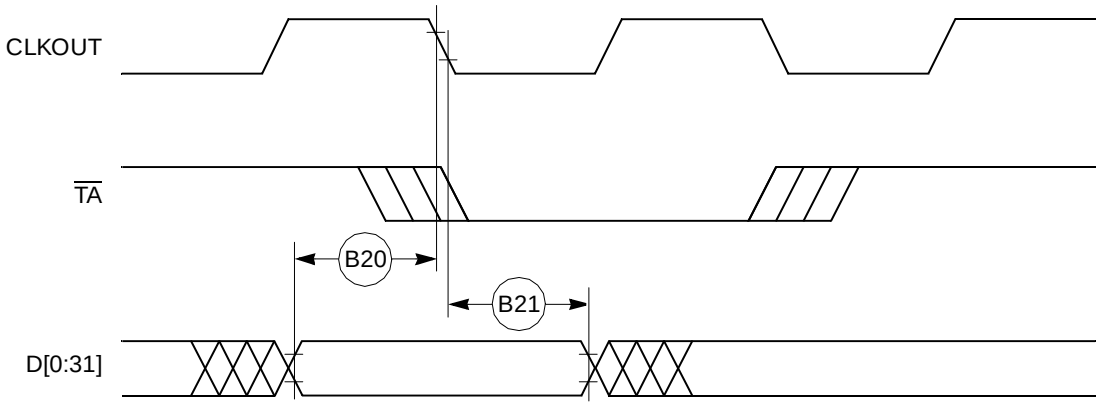

Figure 11. Input Data Timing when Controlled by UPM in the Memory Controller and DLT3 = 1

Figure 12 through Figure 15 provide the timing for the external bus read controlled by various GPCM factors.

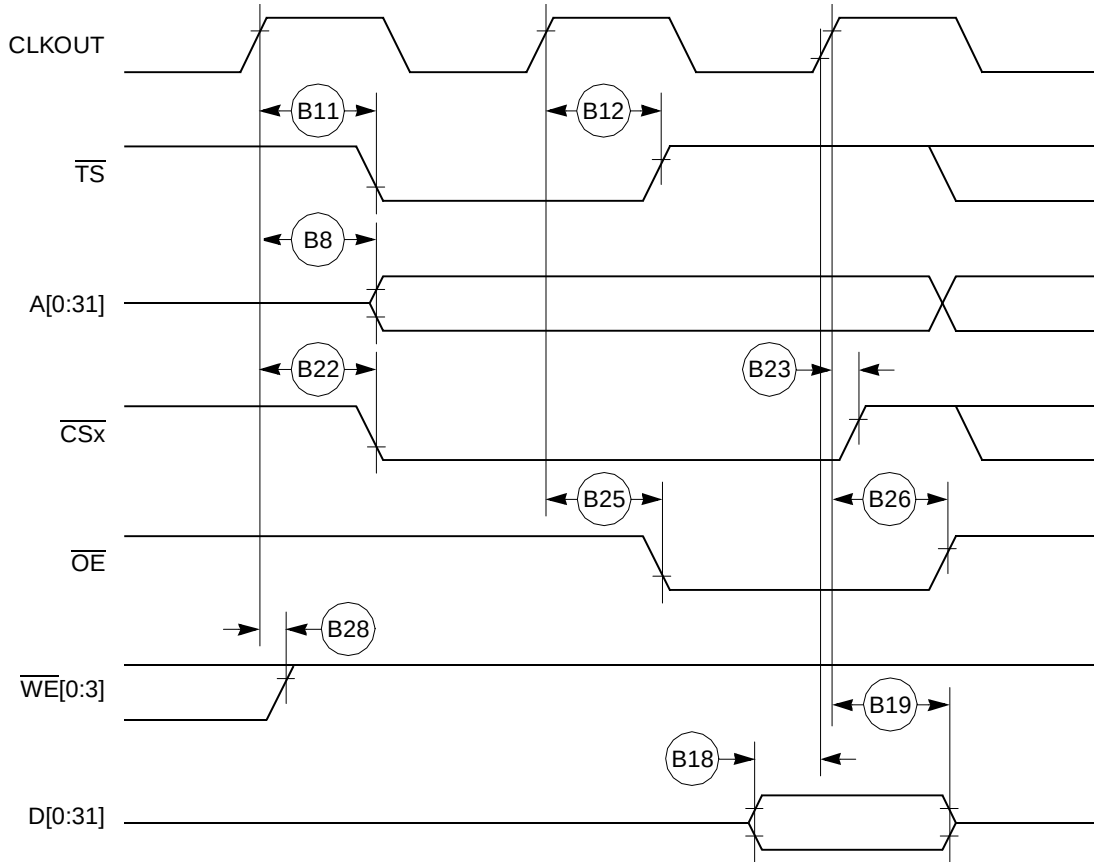

Figure 12. External Bus Read Timing (GPCM Controlled—ACS = 00)

Table 13 shows the PCMCIA port timing for the MPC875/MPC870.

Table 13. PCMCIA Port Timing

Num	Characteristic	33 MHz		40 MHz		66 MHz		80 MHz		Unit
		Min	Max	Min	Max	Min	Max	Min	Max	
P57	CLKOUT to OPx valid (MAX = 0.00 × B1 + 19.00)	—	19.00	—	19.00	—	19.00	—	19.00	ns
P58	$\overline{\text{HRESET}}$ negated to OPx drive[1] (MIN = 0.75 × B1 + 3.00)	25.70	—	21.70	—	14.40	—	12.40	—	ns
P59	IP_Xx valid to CLKOUT rising edge (MIN = 0.00 × B1 + 5.00)	5.00	—	5.00	—	5.00	—	5.00	—	ns
P60	CLKOUT rising edge to IP_Xx invalid (MIN = 0.00 × B1 + 1.00)	1.00	—	1.00	—	1.00	—	1.00	—	ns

[1] OP2 and OP3 only.

Figure 30 provides the PCMCIA output port timing for the MPC875/MPC870.

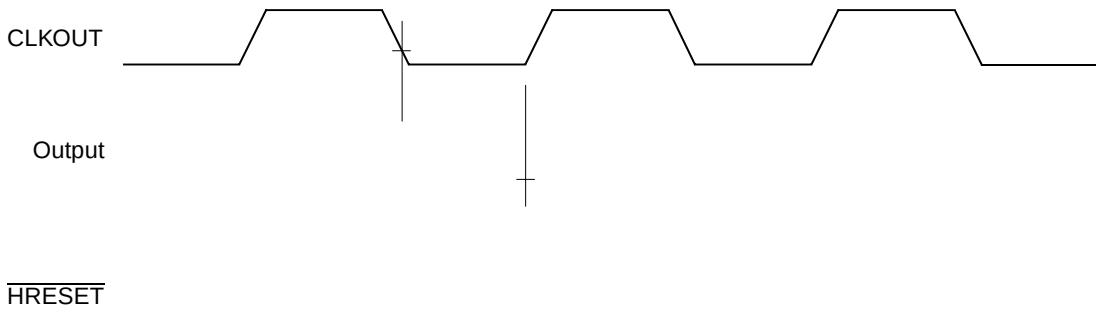

Figure 30. PCMCIA Output Port Timing

Figure 31 provides the PCMCIA input port timing for the MPC875/MPC870.

Figure 31. PCMCIA Input Port Timing

13.3 Baud Rate Generator AC Electrical Specifications

Table 19 provides the baud rate generator timings as shown in Figure 46.

Table 19. Baud Rate Generator Timing

Num	Characteristic	All Frequencies		Unit
		Min	Max	
50	BRGO rise and fall time	—	10	ns
51	BRGO duty cycle	40	60	%
52	BRGO cycle	40	—	ns

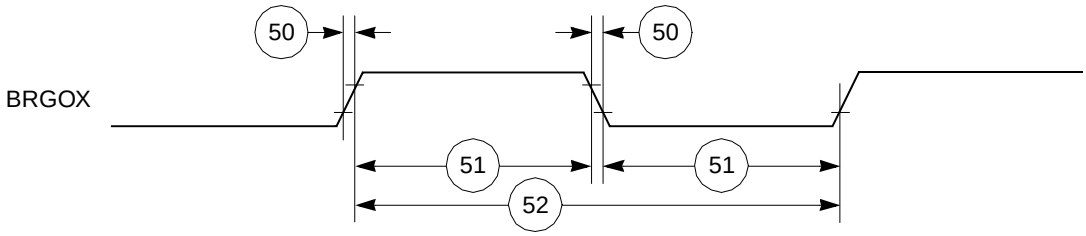

Figure 46. Baud Rate Generator Timing Diagram

13.4 Timer AC Electrical Specifications

Table 20 provides the general-purpose timer timings as shown in Figure 47.

Table 20. Timer Timing

Num	Characteristic	All Frequencies		Unit
		Min	Max	
61	TIN/$\overline{\text{TGATE}}$ rise and fall time	10	—	ns
62	TIN/$\overline{\text{TGATE}}$ low time	1	—	clk
63	TIN/$\overline{\text{TGATE}}$ high time	2	—	clk
64	TIN/$\overline{\text{TGATE}}$ cycle time	3	—	clk
65	CLKO low to $\overline{\text{TOUT}}$ valid	3	25	ns

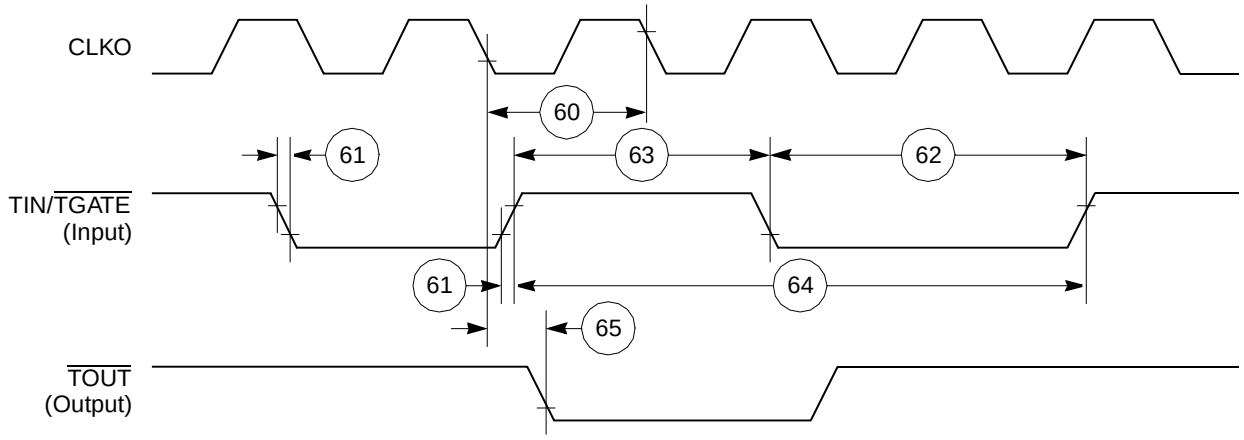

Figure 47. CPM General-Purpose Timers Timing Diagram

13.5 Serial Interface AC Electrical Specifications

Table 21 provides the serial interface (SI) timings as shown in Figure 48 through Figure 52.

Table 21. SI Timing

Num	Characteristic	All Frequencies		Unit
		Min	Max	
70	L1RCLKB, L1TCLKB frequency (DSC = 0)[1, 2]	—	SYNCCLK/2.5	MHz
71	L1RCLKB, L1TCLKB width low (DSC = 0)[2]	P + 10	—	ns
71a	L1RCLKB, L1TCLKB width high (DSC = 0)[3]	P + 10	—	ns
72	L1TXDB, L1ST1 and L1ST2, $\overline{\text{L1RQ}}$, L1CLKO rise/fall time	—	15.00	ns
73	L1RSYNCB, L1TSYNCB valid to L1CLKB edge (SYNC setup time)	20.00	—	ns
74	L1CLKB edge to L1RSYNCB, L1TSYNCB, invalid (SYNC hold time)	35.00	—	ns
75	L1RSYNCB, L1TSYNCB rise/fall time	—	15.00	ns
76	L1RXDB valid to L1CLKB edge (L1RXDB setup time)	17.00	—	ns
77	L1CLKB edge to L1RXDB invalid (L1RXDB hold time)	13.00	—	ns
78	L1CLKB edge to L1ST1 and L1ST2 valid[4]	10.00	45.00	ns
78A	L1SYNCB valid to L1ST1 and L1ST2 valid	10.00	45.00	ns
79	L1CLKB edge to L1ST1 and L1ST2 invalid	10.00	45.00	ns
80	L1CLKB edge to L1TXDB valid	10.00	55.00	ns
80A	L1TSYNCB valid to L1TXDB valid[4]	10.00	55.00	ns
81	L1CLKB edge to L1TXDB high impedance	0.00	42.00	ns
82	L1RCLKB, L1TCLKB frequency (DSC = 1)	—	16.00 or SYNCCLK/2	MHz
83	L1RCLKB, L1TCLKB width low (DSC = 1)	P + 10	—	ns

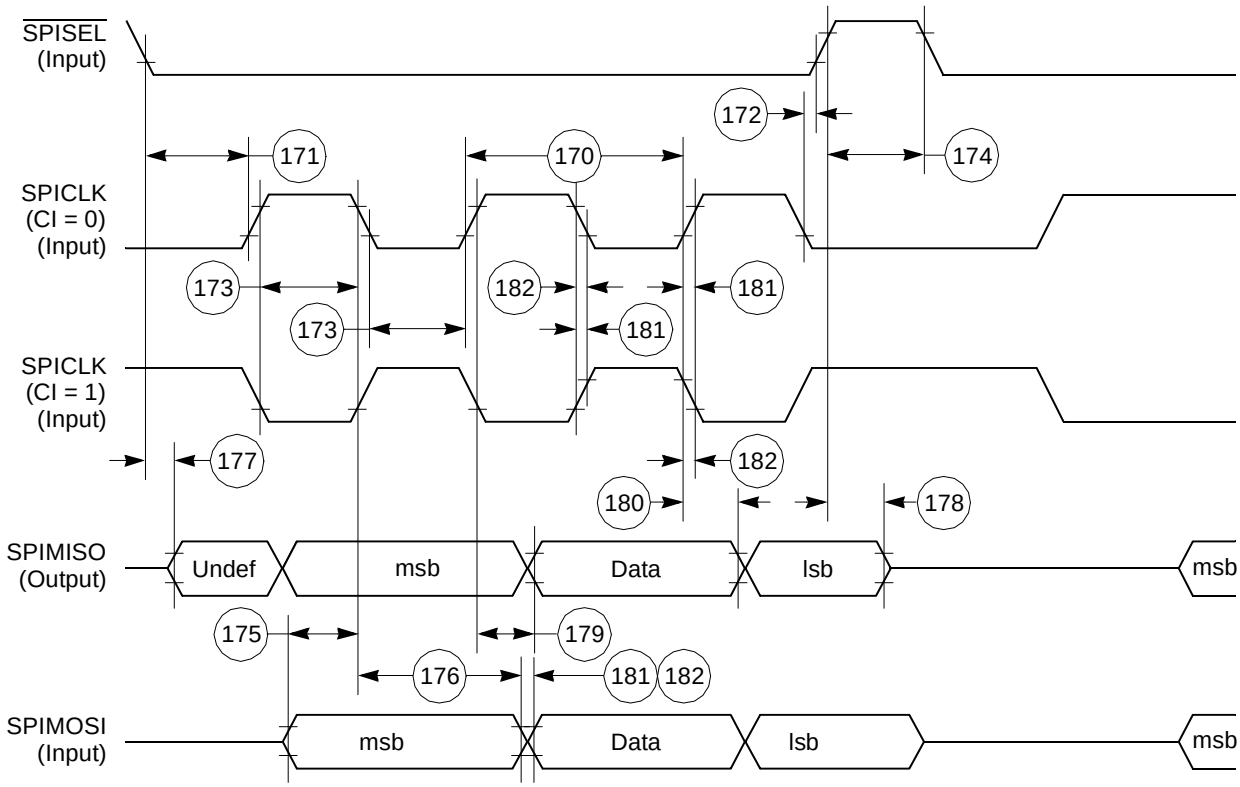

Figure 63. SPI Slave (CP = 1) Timing Diagram

13.11 I²C AC Electrical Specifications

Table 28 provides the I²C (SCL < 100 kHz) timings.

Table 28. I²C Timing (SCL < 100 kHz)

Num	Characteristic	All Frequencies		Unit
		Min	Max	
200	SCL clock frequency (slave)	0	100	kHz
200	SCL clock frequency (master)[1]	1.5	100	kHz
202	Bus free time between transmissions	4.7	—	µs
203	Low period of SCL	4.7	—	µs
204	High period of SCL	4.0	—	µs
205	Start condition setup time	4.7	—	µs
206	Start condition hold time	4.0	—	µs
207	Data hold time	0	—	µs
208	Data setup time	250	—	ns
209	SDL/SCL rise time	—	1	µs

16.1 Pin Assignments

Figure 69 shows the JEDEC pinout of the PBGA package as viewed from the top surface. For additional information, see the MPC885 PowerQUICC Family User's Manual

NOTE

The pin numbering starts with B2 in order to conform to the JEDEC standard for 23-mm body size using a 16 × 16 array.

NOTE: This is the top view of the device.

	2	3	4	5	6	7	8	9	10	11	12	13	14	15	16	17
B	MODCK2	TEXP	EXTCLK	MODCK1	OP0	ALEA	IPB0	$\overline{\text{BURST}}$	$\overline{\text{IRQ6}}$	$\overline{\text{BR}}$	$\overline{\text{TEA}}$	$\overline{\text{BI}}$	$\overline{\text{CS0}}$	$\overline{\text{CS3}}$	$\overline{\text{CS5}}$	N/C
C	IPA7	$\overline{\text{RSTCONF}}$	$\overline{\text{SRESET}}$	BADDR29	OP1	$\overline{\text{AS}}$	ALEB	$\overline{\text{IRQ2}}$	$\overline{\text{BB}}$	$\overline{\text{TS}}$	$\overline{\text{TA}}$	$\overline{\text{BDIP}}$	$\overline{\text{CS2}}$	$\overline{\text{CE1A}}$	GPLAB3	GPLA0
D	IPA4	IPA2	$\overline{\text{WAITA}}$	$\overline{\text{PORESET}}$	XTAL	EXTAL	BADDR30	IPB1	$\overline{\text{BG}}$	GPLA4	GPLA5	$\overline{\text{WR}}$	$\overline{\text{CE2A}}$	$\overline{\text{CS7}}$	$\overline{\text{WE2}}$	$\overline{\text{WE1}}$
E	D31	IPA5	IPA3	VSSSYN	VDDSYN	$\overline{\text{HRESET}}$	BADDR28	$\overline{\text{IRQ4}}$	$\overline{\text{IRQ3}}$	$\overline{\text{CS1}}$	GPLB4	$\overline{\text{CS4}}$	GPLAB2	$\overline{\text{WE0}}$	$\overline{\text{BSA1}}$	$\overline{\text{BSA2}}$
F	D29	D30	IPA6	IPA1	VSSSYN1						$\overline{\text{CS6}}$	$\overline{\text{OE}}$	$\overline{\text{BSA0}}$	$\overline{\text{BSA3}}$	TSIZ0	A31
G	D7	D28	CLKOUT	D26	IPA0							$\overline{\text{WE3}}$	TSIZ1	A26	A22	A18
H	D22	D6	D24	D25									A28	A30	A25	A24
J	D18	D19	D20	D21									A23	A21	A20	A29
K	D5	D15	D16	D14									A14	A19	A27	A17
L	D3	D2	D27	D0									A10	A12	A15	A16
M	D11	D9	D12	PE18	$\overline{\text{IRQ0}}$							MII_MDIO	A2	A8	A11	A13
N	D10	D1	D13	$\overline{\text{IRQ7}}$	PA2						PB26	PB27	A1	A6	A7	A9
P	D23	D17	PE22	$\overline{\text{IRQ1}}$	PA0	PA4	PE14	PE31	PC6	PA6	PC11	TDO	PA15	A3	A5	A4
R	D4	D8	PE25	PA3	PE19	PE28	PE30	PA11	MII_COL	PA7	PA10	TCK	PB28	PC15	A0	PB29
T	PE26	PD8	PA1	PB31	PE27	PE15	PE17	PE21	PC7	PB19	PB24	TDI	TMS	PC12	N/C	PB30
U	N/C	PE20	PE23	MII-TX-EN	PE16	PE29	PE24	PC13	MII-CRS	PC10	PB23	PB25	TRST	GND	PA14	N/C

Figure 69. Pinout of the PBGA Package —JEDEC Standard